COOPER
Cooper Power Systems

Voltage Regulators

Cooper Power System's VR-32 Regulator and CL-2A Control
Installation, Operation and Maintenance Instructions
Parts Replacement Information

S225-10-5
Service Information

TABLE OF CONTENTS

VR-32 REGULATORS - SECTION 1
Introduction 1-3
Receiving 1-3
INSPECTION 1-3
UNLOADING 1-3
STORING 1-3
Installation 1-3
PRE-INSTALLATION INSPECTION 1-3
NAMEPLATE 1-4
SYSTEMS CONNECTIONS 1-4
MOUNTING 1-5
PLACING A REGULATOR INTO SERVICE 1-5
Removal From Service 1-6
DETERMINING NEUTRAL POSITION 1-6
DE-ENERGIZING THE REGULATOR 1-6
Maintenance Program 1-6
PERIODIC INSPECTIONS 1-6
REMOVAL OF CL-2A FRONT PANEL 1-7
REPLACEMENT OF CL-2A FRONT PANEL 1-7
UNTANKING THE REGULATOR 1-7
RETANKING THE REGULATOR 1-7
MAINTENANCE 1-8
Construction 1-8
SURGE PROTECTION 1-8
POSITION INDICATOR & ADD-AMP 1-8
INTERNAL CONSTRUCTION & WIRING DIAGRAMS 1-10
CL-2A REGULATOR CONTROL - SECTION 2
Introduction 2-2
Specifications 2-2
Pre-Installation Operational Check 2-2
In-Service Calibration Check 2-2
Setting the CL-2A Control for Service 2-3
Control Operation Modes 2-4
CL-2A Control Operation 2-4
DEVELOPMENT OF POTENTIALS 2-7
LINE DROP COMPENSATOR 2-9
MOTOR CIRCUIT 2-10
Automatic/Manual Operation 2-10
Supervisory Control and Data Acquisition (SCADA) 2-10
Voltage Reduction 2-11
Retrofitting a CL-2A Control 2-11
VR-32 REGULATOR TAP CHANGER - SECTION 3
Tap Changer Operation 3-1
Motor 3-1
Reversing Switch 3-1
Drive Mechanisms 3-2
Contacts 3-3
Operating Sequence 3-3
TROUBLE SHOOTING GUIDE - SECTION 4
Complete Regulator In Service 4-1
EXTERNAL CHECK 4-1
DEFINING THE PROBLEM 4-1
JUNCTION BOX TROUBLE SHOOTING 4-1
POSITION INDICATOR REPLACEMENT 4-2
FRONT PANEL TROUBLE SHOOTING 4-3
CIRCUIT BOARD TROUBLE SHOOTING 4-4
CIRCUIT BOARD REMOVAL 4-10
ACCESSORIES - SECTION 5 5-1
SPARE PARTS - SECTION 6 6-1
APPENDIX - SECTION 7 7-1
Serial Numbers 7-1
List of Tables 7-1
List of Diagrams 7-1

Refer to page 1-2 of these instructions for the definitions of warning and caution alerts.These instructions do not claim to cover all details or variations in the equipment, procedure, or process described, nor to provide direction for meeting every possible contingency during installation, operation, or maintenance. When additional information is desired to satisfy a problem not covered sufficiently for the user's purpose, please contact your Cooper Power Systems representative.

October 1992, reprint of 2/91 • 1992 ©Cooper Power Systems, Inc.

1. CLAMP-TYPE TERMINALS
2. THREADED-STUD BUSHING TERMINALS
3. BUSHINGS
4. POSITION INDICATOR
5. REGULATOR LIFTING LUGS
6. UPPER FILTER PRESS CONNECTION
7. ARRESTER MOUNTING BOSSES
8. BALL-TYPE OIL SIGHT GAUGE
9. CONTROL CABLE
10. NAMEPLATES (2)
11. GROUND BOSSES (2)
12. DRAIN VALVE & OIL SAMPLING DEVICE
13. BOLT-DOWN PROVISIONS
14. CONTROL
15. CONTROL ENCLOSURE
16. POLE-TYPE MOUNTING BRACKETS
17. ENCLOSURE SUPPORT BAR
18. HANDHOLE COVER
19. MOV-TYPE SERIES ARRESTER
20. JUNCTION BOX
21. INTERNAL ASSEMBLY LIFTING LUGS
22. PANEL-TYPE RADIATORS (Not Shown)

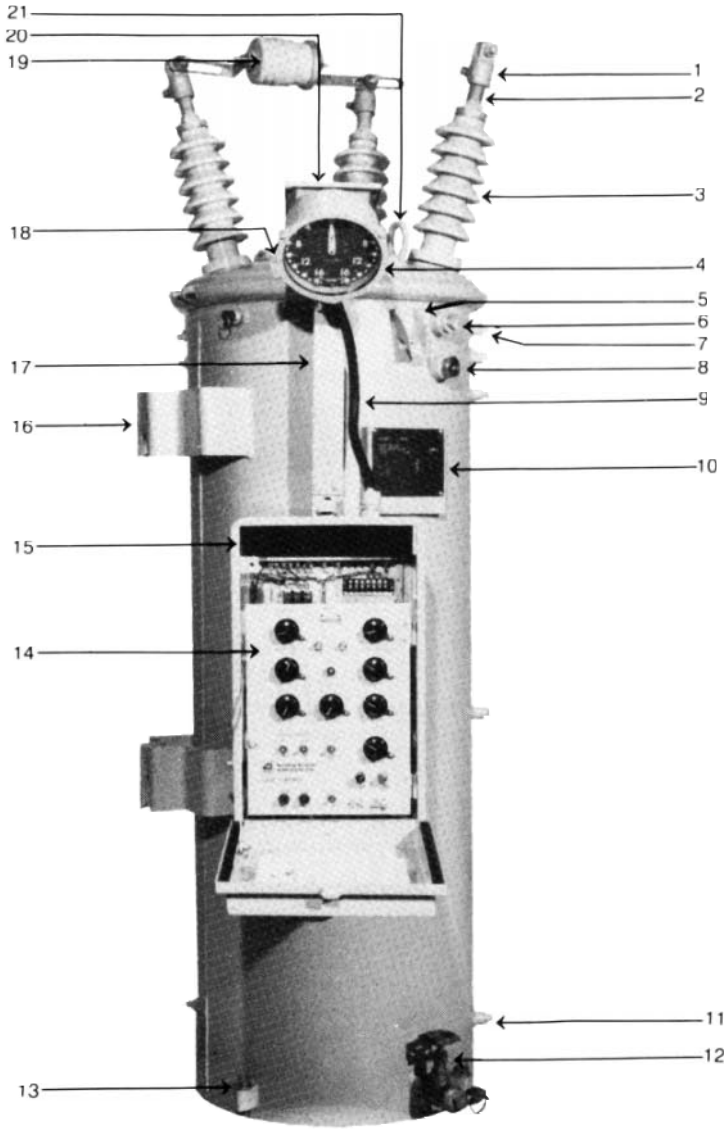

Figure 1-2
Features of the VR-32 Voltage Regulator.

DEFINITIONS OF ALERTS: PLEASE READ THE FOLLOWING CAREFULLY AND HEED THE WARNINGS CAUTIONS, AND NOTICES HEREIN.

WARNING: A WARNING describes a potentially hazardous situation which, if not avoided, could result in death or serious injury.

CAUTION: A CAUTION describes a potentially hazerdous situation which, if not avoided, could result in minor or moderate injury.

NOTICE: A NOTICE describes a situation, which if not avoided could result in damage to the equipment with no likelihood of personal injury.

VR-32 VOLTAGE REGULATORS - Section 1

INTRODUCTION

Cooper Power System's VR-32 feeder voltage regulators are regulating auto-transformers. They regulate line voltage from ten-percent raise (boost) to ten-percent lower (buck) in 32, approximately 5/8 % steps.

Cooper Power System's regulators are supplied with the following standard features:

Dual-rated 55/65ºC rise.
ADD-AMP capabiilty.
Unit construction.
Sealed-tank construction.
Pressure relief device.
High-creep bushings with clamp-type terminals.
MOV-type external series arresters.
Shunt arrester mounting bosses.
Two nameplates.
Gil sight gauge.
Upper filter press connection.
Drain valve and oil-sampling device.

The 65ºC rise insulation system and the sealed-tank construction allow for a BONUS CAPACITY 12% above the 55ºC normal rating without loss of normal insulation life. The BONUS CAPACITY is stated on the nameplate (such as 167/187 kVA for a nominal 167 kVA regulator), and is available when the ADD-AMP feature is not in use. All Cooper Power System's regulators are manufactured and tested to ANSI standard C57.15.

The unit construction, which suspends the internal assembly and the control enclosure form the cover, allows for ease of inspection and maintenance.

There are three types of step-voltage regulators: source-side series winding, load-side series winding, and series transformer. Cooper Power System's Regulators are usually equipped with an equalizer winding. The nameplates located on the tank and control box clarify the power circuit involved.

RECEIVING

Inspection

Prior to shipment, the regulator is thoroughly tested and inspected at the factory. Immediately upon receipt of the regulator shipment, before unloading, a thorough inspection should be made for damage, evidence of rough handling, or shortages. The position indicator, junction box, arrester, radiators, and bushings should all be inspected for evidence of damage. **Should this initial inspection reveal evidence of rough handling, damage, or shortages, it should be noted on the Bill of Lading and a claim should immediately be made with the carrier.** Also, notify Cooper Power Systems, 2300 Badger Drive, Waukesha, Wisconsin 53188, attention Service Manager.

Unloading

When an overhead crane is used for unloading, the regulator must be lifted by means of a sling and spreader bar utilizing the tank-mounted lifting lugs which are shown in Figure 1-2. Do not lift the entire unit with the lifting eyes on the cover. The lifting eyes are only to be used to untank the internal assembly which is attached to the cover.

WARNING: The cover may fracture if the cover-mounted lifting eyes are used to fit the entire unit. Lift the entire unit only with the tank-mounted lifing lugs.

Storing

If the regulator is not to be placed into immediate use, it can be stored with minimal precautions. Locate the unit where the possibility of mechanical damage is minimized.

INSTALLATION

Pre-installation Inspection

Before connecting the regulator to the line, make the following inspection:

1 . Check the oil sight gauge. Look for visible signs of oil leakage.
2. Examine the series arrester for damage. If damaged, install a new arrester of the same voltage rating.
3. Inspect the porcelain bushings for damage or leaking seals. If there is a suspicion that moisture has entered the unit, remove the handhole cover and inspect for evidence of moisture such as rust or watertracks in the oil. If moisture has entered the tank, dry the regulator and filter the oil before putting the unit in service. The oil must test 26 kV minimum in a standard gap (ASTM D 877). Be sure to properly replace the handhole cover.

CAUTION: Do not subject tap changer to temperatures above 150ºF. To do so may cause damage to the contact panels, resulting in misalignment of the contacts.

4. If the regulator has been stored for some time, test the dielectric strength of the oil according to ASTM D-877.
5. The regulator may be energized at rated line voltage (with caution) and an operational check, page 1-8, can be performed. (This procedure is optional.)
6. A Hi-pot test may be done to insure adequate electrical clearances to ground. (This procedure is optional.)

Nameplate

The VR-32 nameplate (Figure 1-3) prominently displays the 55/65°C temperature rise rating of the regulator. The sealed-tank system along with the 65°C rise winding insulation allows the regulator to be used at this dual rating. This provides an additional 12 percent capacity without loss of normal insulation life.

The nameplate is stamped with pertinent rating information and includes the schematic diagram of the VR-32 internal design. Refer to the nameplate to determine the correct adjustment for the required regulated load voltage. A movable peg on the nameplate indicates the tap and load voltage in use.

Systems Connections

A regulator can regulate a single-phase circuit, or one phase of a three-phase wye or delta circuit. Two regulators connected phase-to-phase in open-delta, or three regulators connected phase-to-phase in closed-delta, can regulate a three-phase, three-wire delta circuit. When connected in wye, three regulators can regulate a three-phase, four-wire multi-grounded wye circuit. Three regulators cannot be connected in wye on three-phase, three-wire circuits because of the probability of neutral shift. Typical connection diagrams are illustrated in Figure 1-4.

WARNING: Connect the "S" bushing to the SOURCE, the "L" bushing to the LOAD, and the "SL" bushing to NEUTRAL. To do otherwise may cause excessively high or low voltage on the load side of the regulator or cause severe damage to the regulator.

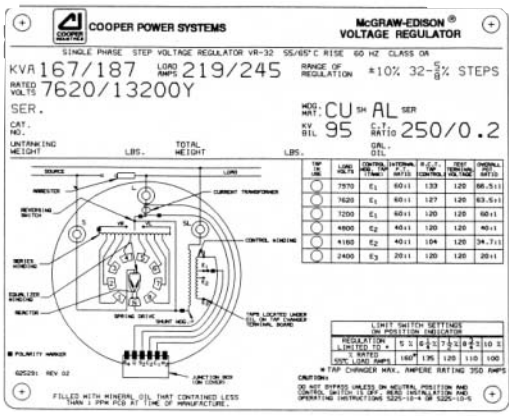

Figure 1-3.
Nameplate.

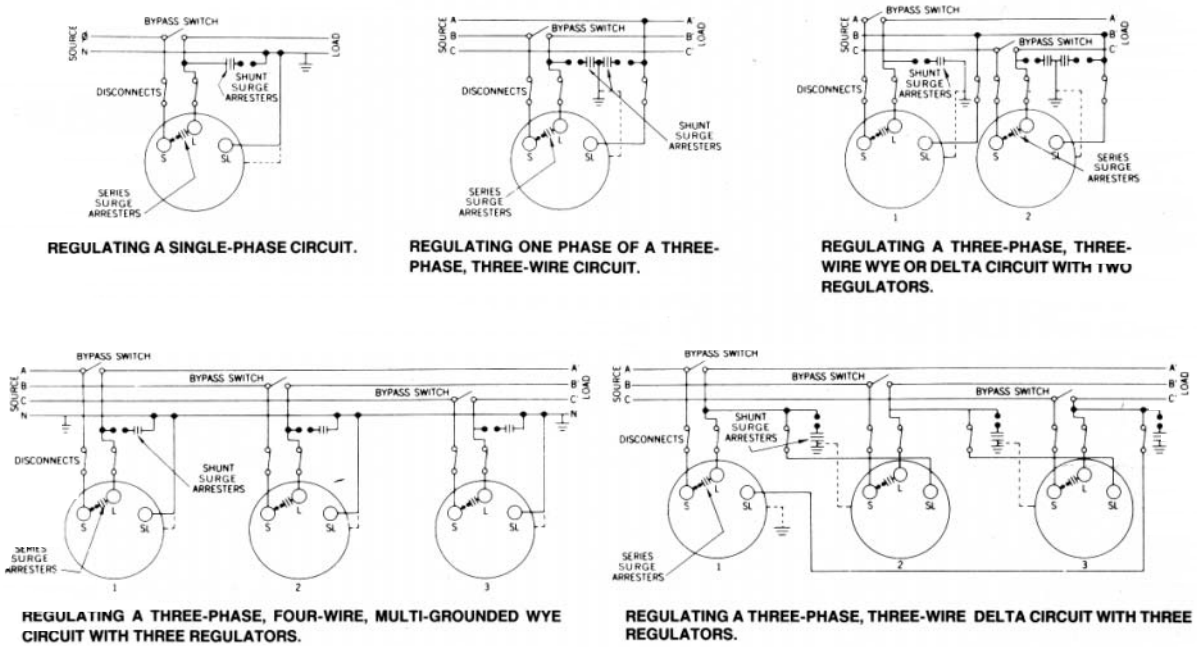

Figure 1-4.
Typical connections diagrams.

NOTE: Individual switches are shown for the bypass and disconnect functions. However, a regulator-bypass-disconnect switch can be used in each phase to perform the bypassing and disconnecting operations in sequence. Each of these switches replaces one bypass and two disconnect switches shown in the diagrams.

Mounting

A regulator can be mounted on a pole, cross arm platform, or elevating structure (optional). Regulators are normally provided with either pole mounting brackets or a station platform according to the rating. This information is available in Table 3-1, page 3-1, by noting the S(Substation) suffix to the kVA. A Cooper Power System's elevating structure (Figure 1-4) can be used to simplify substation installation of regulators requiring a specific live part-to-ground clearance.

The regulator control can be mounted on the regulator tank, or at a point remote from the unit. Rubber-covered cable is available in lengths of 15, 20, 25, 30, and 35 ft for interconnection between the control and the regulator.

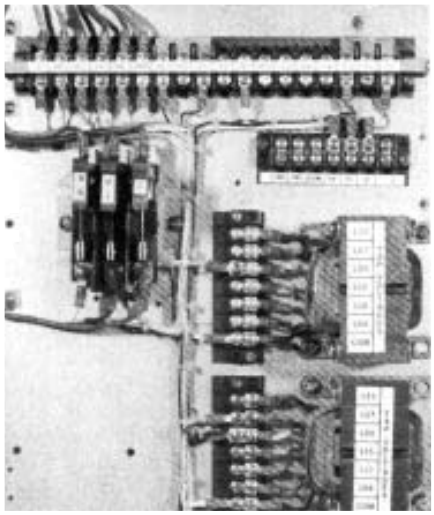

Figure 1-6.
Knife switches and TB1 (with optional V6 knife switch and RCT2).

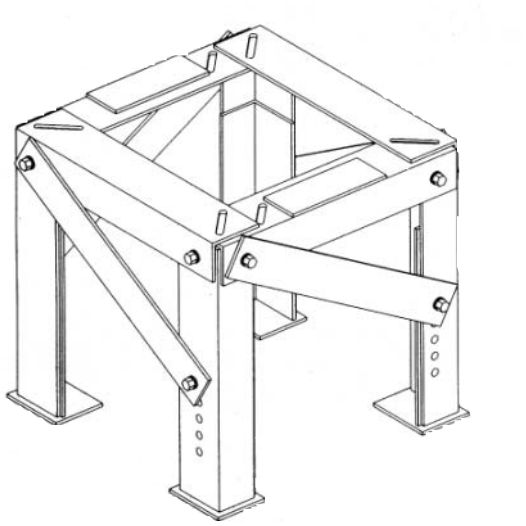

Figure 1-5.
Elevating structure.

Placing A Regulator Into Service

Regulators can be placed in service without interrupting load continuity.

> **WARNING:** Closing the bypass switch with the tap changer off neutral will short circuit part of the series winding. Before closing the bypass switch, the regulator must be on NEUTRAL and the control switch set to OFF.

Procedure A should be followed when one bypass switch and two disconnect switches are used. Procedure B should be followed when a regulator bypass-disconnect switch is used.

> **CAUTION:** When installing a regulator, solidly ground both the regulator tank AND the control. Failure to do so may cause damage to the regulator and/or control due to current surges and may subject personnel to electrical shock.

A threaded stud is provided at the bottom of the control enclosure and a ground pad is provided on the side of the enclosure, for grounding purposes.

PROCEDURE A: ONE BYPASS SWITCH AND TWO DISCONNECT SWITCHES

1. Verify from the regulator nameplate that the control circuit is connected for the proper regulated load voltage.
2. Set the POWER switch to OFF and the CONTROL switch to OFF.
3. The knife switches on the back panel should be set with the V1 (potential switch) [and V6 if present] closed (pushed in), and the C (CT shorting switch) open (pulled out). See Figure 1 -5.
4. Close the SOURCE-LOAD (SL) disconnect switch. (Delta applications only).
5. Close the SOURCE (S) disconnect switch.
6. Set the POWER switch to INTERNAL and the CONTROL switch to MANUAL.
7. Lift the RAISE-LOWER switch to operate the tap changer two or three steps, then depress the RAISE-LOWER switch to return the tap changer to neutral position. (These steps verify the mechanism is functional.) When on neutral, the NEUTRAL LAMP will glow and the position indicator will point to zero.
8. **With the regulator in neutral position,** set the CONTROL switch to OFF, set the POWER switch to OFF, open the V1 knife switch (back panel) [and V6 if present], and remove the 6A motor fuse.

9. Close the LOAD (L) disconnect switch.
10. Open the BYPASS Switch.
11. Replace the 6_A motor fuse, close the V_1 knife switch [and V_6 if present] and set the POWER switch to INTERNAL.
12. Set the AUTO/OFF/MANUAL switch to AUTO.
13. Set the VOLTAGE setting to call for one step of voltage correction.
14. If satisfactory, call for one step of voltage correction in the opposite direction.
15. If both operations are satisfactory, set the VOLTAGE SETTING control at the desired level.

PROCEDURE B: **REGULATOR BYPASS DISCONNECT SWITCH**

1. Verify from the regulator nameplate that the control circuit is connected for the proper regulated load voltage.
2. Set the AUTO/OFF/MANUAL switch to MANUAL and the POWER switch to EXTERNAL.
3. The knife switches on the back panel should be set with the V_1 (potential switch) [and V_6 if present] open (pulled out), and the C (CT shorting switch) closed (pushed in). See Figure 1-6.
4. Apply 120 volts to the EXTERNAL SOURCE terminals, if 120 volts is available. If not, proceed to Step 7, below.
5. Lift the RAISE/LOWER switch to operate the tap changer two or three steps, then depress the RAISE/LOWER switch to return the tap changer to neutral position. (These steps verify the mechanism is functional.) When on neutral, the NEUTRAL LAMP will glow and the position indicator will point to zero.
6. Remove the 120 volts from the EXTERNAL SOURCE terminals.
7. **With the regulator in neutral position,** set the AUTO/OFF/MANUAL switch to OFF, set the POWER switch to OFF, and remove the 6_A motor fuse.
8. Close the SOURCE-LOAD (SL) disconnect switch. (Delta applications only).
9. Close the regulator bypass-disconnect switch.
10. Replace the 6_A motorfuse, close the V_1 knife switch [and V_6 if present], open the C knife switch, and set the POWER switch to INTERNAL.
11. Set the AUTO/OFF/MANUAL switch to AUTO.
12. Set the VOLTAGE SETTING to call for one step of voltage correction.
13. If satisfactory, call for one step of voltage correction in the opposite direction.
14. If both operations are satisfactory, set the VOLTAGE SETTING control at the desired level.

REMOVAL FROM SERVICE

Determining Neutral Position

WARNING: Closing the bypass switch with the tap changer off neutral will short circuit part of the series winding. Before closing the bypass switch, the regulator must be on NEUTRAL and the control switch set to OFF.

Return the regulator to neutral. The regulator can be safely removed from service without interrupting load continuity only on the neutral position. It is wise to employ more than one method to determine whether a regulator is on neutral.

To Return The Regulator To Neutral

1. Use the control to RAISE or LOWER the regulator until it is in the neutral position.
2. When on NEUTRAL, the NEUTRAL LAMP will light and the POSITION INDICATOR will point to zero.
3. To stop the regulator on the neutral position, the CONTROL switch should be turned to OFF during the switching operation from position “1 “ to position zero. Switching to OFF prior to reaching the neutral position prevents overshoot.
4. The POSITION INDICATOR and NEUTRAL LIGHT **MUST BOTH** indicate neutral.

WARNING: A regulator should be bypassed with the line energized ONLY if BOTH the position indicator AND the neutral light indicate NEUTRAL. If both do not indicate NEUTRAL, the line should be de-energized to avoid shorting part of the series winding.

WARNING: Always use the CONTROL switch (labeled AUTO/REMOTE-OFF-MANUAL) to operate the regulator, not the POWER switch. Failure to do so may result in the tap changer stepping off of neutral immediately upon being energized.

De-energizing The Regulator

Once it has been established that the regulator is on neutral, immediately proceed with the following steps:

1. Turn the CONTROL switch to OFF.
2. Turn the control POWER switch to OFF.
3. Open the V_1 knife switch (and V_6 if present) on the back panel (Figure 1-5).
4. Remove the 6A motor fuse.
5. Close the BYPASS switch.
6. Open the SOURCE(S) disconnect switch.
7. Open the LOAD (L) disconnect switch.
8. Open the SOURCE-LOAD (SL) disconnect switch. (Delta application only.)

Note: If a regulator bypass disconnect is used in place of three separate switches, steps 5, 6, and 7 are carried out in one operation.

MAINTENANCE PROGRAM

Periodic Inspections

Step-type voltage regulators are designed to provide many years of trouble-free operation. Proper operation of the regulator can be checked without removing the unitfrom service. Using the manual mode of operation, run the regulator several steps in the raise direction, and then turn the control back to auto. After the time delay programmed into the control expires, the regulator should return within bandwidth (which will normally be the same position you started from, unless the incoming voltage is currently varying). When this has been completed, use the manual mode of operation to run the regulator several steps in the lower direction, and then turn the control back to auto. After the time delay, the regulator should return back within bandwidth.

If the regulator will not operate properly, a substitute control can be tried before removing the unit from service. Refer to the following sections for proper procedures on removing and replacing the CL-4C Control.

Since the usable life of a regulator is affected by its application, it may be desirable to periodically remove the regulator-from service and untank the unit to verify contact wear, oil dielectric, etc. The time for this will vary, depending on a specific user's past experience.

Removal of CL-2A Front Panel

The CL-2A front panel may be removed from the regulator with the regulator energized.

To open the front panel, unscrew the panel locking screw on the left side of the panel. This allows the control to swing open on its hinges. With the control open, the back panel is readily accessible. The design of the control enclosure, back panel, and front panel enable easy replacement of the front panel, leaving the back panel, control enclosure, and cable intact. To remove the front panel, proceed as follows:

1 . Push closed the current shorting switch, C. This shorts out the secondary of the regulator C.T.

> **WARNING:** Push the C shorting switch closed before attempting to remove the fanning strip. Failure to do so will open the regulator CT circuit and may produce a flashover on the control.

2. Pull open the disconnect switch, V_1 (and V_6 if present). This de-energizes the CL-2A front panel.
3. Loosen the screws on the interconnecting terminal strip (TB2) at the bottom of the back panel.
4. Pull the fanning strip free from the terminal strip.

The CL-2A can now be lifted off its hinges. Care should be taken to prevent damage to the CL-2A front panel while in transit and/or storage.

Replacement of CL-2A Front Panel

To replace a CL-2Afront panel in the control enclosure, follow the procedure outlined below:

1. Engage the front panel on the enclosure hinges.
2. Insert the fanning strip from the front panel wiring harness under the TB2 terminal block screws, matching terminal indentification.
3. Tighten the screws on the interconnecting terminal block.
4. Push closed the disconnect switch, V_1 (and V_6 if present).
5. Pull open the current shorting switch, C.
6. Close the panel and tighten panel locking screw.

Untanking The Regulator

1. Manually run the tap changer to neutral, if possible. If not possible, note position indicator reading before proceeding to untank.
2. Remove the two mounting bolts holding the control cabinet to tank.
3. Remove the series arrester. Release internal pressure using the pressure relief device on the side of the regulator.
4. Free cover by removing clamping ring or cover bolts.
5. Attach sling or hooks with spreader bar (Figure 1-7) to lifting eyes and raise the cover, with the attached core-and-coil assembly, until the top of the coil is approximately one inch under oil. The control cabinet should be guided to avoid snagging during lifting.

> **CAUTION:** Before intanking a fan-cooled regulator, (1) lower the oil level below the thermometer, then (2) remove the thermometer will. Failure to do so will result in damage to the thermometer will and/or spillage of oil when the internal assembly is lifted.

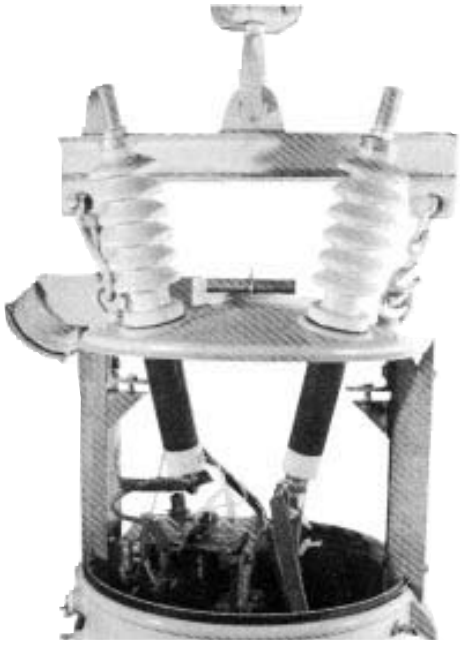

Figure 1-7.
Untanking.

It is recommended that the main core-and-coil assembly never be removed from the oil, except when a winding failure occurs. Blocking between the cover and tank lip should be employed to suspend the core-and-coil assembly within the oil until inspection of the tap changer or other maintenance is complete.

Retanking The Regulator

Retank the regulator as follows:

1. Be sure the position indicator shows the present position of the tap changer. If not, remove the indicator cable in the junction box from the position indicator shaft after loosening the set screw. Rotate the indicator shaft until the proper position is reached, then tighten the set screw. Verify coordination of position indicator with tap changer in neutral position (control neutral light on).
2. Check the gasket seat surfaces on the cover and tank, and wipe clean. Wipe the gasket and position it on the tank lip. Loosen **horizonta**l side channel bolts to insure proper seating of regulator in tank and cover seal.

3. Raise the cover assembly and attached components over the tank. Make certain of proper orientation.
4. Lower the unit, positioning the channels in the tank guides. Guide the control cabinet onto its brackets.
5. Seat the unit in the tank. Tighten the cover clamps or bolts and replace the control mounting bolts.
   NOTE: Tap the cover with a rubber hammer around the edge to properly seal the gasket while tightening the cover band.
6. Check and retighten horizontal side channel bolts through handhole, if required.

Maintenance

The following is the recommended maintenance program for a regulator that has been untanked:

1. Check all connections for tightness.
2. Check all contacts for wear (refer to *S225-10-2).*
3. Avoid removing the main core-and-coil assembly from the oil, except when a winding failure occurs. Blocking between the cover and tank lip should be employed to suspend the core-and-coil assembly within the oil until inspection of the tap changer or other maintenance is complete.

WARNING: When the internal assembly is lifted for inspection or maintenance, blocking should be placed between the cover and the top of the tank to keep the assembly from falling should lifting apparatus fail.

If it is necessary to remove the main core-and-coil assembly from the oil, the following steps should be followed.

A. The tap changer must not be subjected to temperatures above 66ºC. (150ºF). It must be removed if the unit is baked at higher temperatures.
B. If the unit is out of oil more than four hours, it must be rebaked for a minimum of 24 hours at 100ºC (212ºF). The maximum number of times a unit should be rebaked is twice.
C. Within four hours after bake, the unit should be retanked and filled with oil.
D. It is recommended that a vacuum be pulled on the unit for at least one hour (2 mm. of vacuum or better) after the unit is completely refilled with oil. If vacuum processing is not available, allow the entire internal assembly to soak in the oil for at least five days before energizing.
E. Do not test the unit until either the vacuum processing or the soaking has been completed.

4. Consider upgrading controls to latest design.

CO N ST R U CTIO N

Surge Protection

SERIES SURGE ARRESTER

All VR-32 regulators are equipped with a bypass arrester connected across the series winding between the source (S) and load (L) bushings. This bypass arrester limits the voltage developed across the series winding during lightning strikes, switching surges, and line faults. The series surge arrester can be seen in Figure 1-2. A MoV-type series surge arrester of 2.2 kV offers series winding protection on all regulators except those rated over 14,400 volts which have a 3/4.5-kV MoV-type series surge arrester.

SHUNT ARRESTERS

A shunt arrester is an optional accessory on the VR-32 regulator for protection of the shunt winding. The shunt arrester is a direct connected arrester mounted on the tank and connected between the "L" bushing and ground. For additional protection a shunt arrester may also be installed between the S (source) bushing and ground.

For best results, locate these arresters on the mounting pads provided on the tank near the bushing. Ground the arrester and the regulator tank to the same ground connection using the shortest cable possible. Shunt arrester application data is listed in Table 1-1.

TABLE 1-1
Shunt Arrester Application Data.

Regulator Voltage Rating	Nominal System Voltages (volts)		Recommended MOV Shunt Arrester Ratings (kV)
	Delta or Single-Phase	Multi-Grounded Wye	
2500/4330Y	2400 2500	2400/4160 2500/4330	3
5000/8660Y	4160 4330 4800 5000	4160/7200 4330/7500 4800/8320 5000/8660	6
7620/13200Y	6900 7200 7620 7970	6900/11950 7200/12470 7620/13200	9
		7970/13800	10
13800	12000 12470 13200 13800 14400		15
14400/24940Y		13800/23900 14400/24940	18
19920/34500GrdY		19920/34500	27

Position Indicator & ADD-AMP Capability

The position indicator (Figure 1-8) is mounted on a junction box on the cover of the regulator and is directly connected to the tap changer by a flexible drive shaft passing through the junction box and terminal board via a sealing gland.

The indicator face is graduated in steps, numbered 1 through 16, on each side of zero, which designates neutral. Drag hands indicate the maximum and minimum positions attained during raise and lower operations. The drag hands are automatically reset around the position indicator hand by operating the drag hand reset switch on the control front panel.

The ADD-AMP feature of VR-32 regulators allows increased current capacity by reducing the regulation range. This is accomplished by setting limit switches in the position indicator to prevent the tap changer from traveling beyond a set position in either raise or lower directions. The limit switches have scales graduated in % regulation, and are adjustable to specific values of 5, 6-1/4, 7-1/2, 8-3/4, and 10% regulation to alter the regulation range. The five possible load current ratings associated with the reduced regulation ranges are summarized in Table 1-2. At each setting a detent stop provides positive adjustment. Settings other than those with stops are not recommended. The raise and lower limits need not be the same value.

Figure 1-8.
Position Indicator.

Setting The Limit Switches

Before setting the limit switches, be sure the new settings will not conflict with the present tap changer position. Do not set the switches below the indicated tap changer position. For example, if the indicator hand is at step 12 and the change to be made is from plus or minus 10% (step 16) to plus or minus 5% (step 8), run the tap changer back to step 7 or less, manually. Then set the limit switches for plus or minus 5% regulation.

Limit switches should be set in anticipation of the maximum deviation of primary voltage. For example, on a circuit where 7200 volts is to be maintained, plus or minus 10% will permit voltages between 6480 and 7920 to be regulated effectively. For voltages outside of this range, the regulator will not be able to return the voltage to the preselected level, in this case 7200 volts. The tap changer will have stepped to the maximum tap position and will be unable to regulate further. Five % regulation would accommodate circuit voltages between 6840 and 7560, maintaining 7200 volts for all voltages in this range.

To set the limit switches. follow this two-step procedure:

1. Loosen the captive bezel securing screws and swing the bezel open.
2. Lift the limit switch adjustment lever free of the detent and slide it to the new setting allowing the lever to snap into the detent stop.

TABLE 1-2
ADD-AMP Capabilities.

Rated Volts	Rated kVA	Load Current Ratings (amps) Regulation Range				
		±10%**	±8-3/4%	±7%	±6-1/4%	±5%
2500	25	100/112	110	120	135	160
	50	200/224	220	240	270	320
	75	300/336	330	360	405	480
	100	400/448	440	480	540	640
	125	500/560	550	600	668	668
	167	668	668	668	668	668
	250	1000/1120	1000	1000	1000	1000
	333	1332/1492	1332	1332	1332	1332
	416.3	1665/1865	1665	1665	1665	1665
5000	25	50/56	55	60	68	80
	50	100/112	110	120	135	160
	100	200/224	220	240	270	320
	125	250/280	275	300	338	400
	167	334/374	367	401	451	534
	250	500/560	550	600	668	668
	333	668	668	668	668	668
	416.3	833/900	833	833	833	833
7620	38.1	50/56	55	60	68	80
	57.2	75/84	83	90	101	120
	76.2	100/112	110	120	135	160
	114.3	150/168	165	180	203	240
	167	219/245	241	263	296	350
	250	328/367	361	394	443	525
	333	438/491	482	526	591	668
	416.3	548/614	603	658	668	668
	500	656/668	668	668	668	668
	667	875/900	875	875	875	875
	833	1093/1224	1093	1093	1093	1093
13800	69	50/56	55	60	68	80
	138	100/112	110	120	135	16
	207	150/168	165	180	203	24
	276	200/224	220	240	270	32
	414	300/336	330	360	405	48
	500	362/405	398	434	489	579
	552	400/448	440	480	540	64
	667	483/541	531	580	652	668
	833	604/668	664	668	668	668
14400	72	50/56	55	60	68	80
	144	100/112	110	120	135	16
	288	200/224	220	240	270	320
	333	231/259	254	277	312	37
	416	289/324	318	347	390	462
	432	300/336	330	360	405	480
	500	347/389	382	416	468	555
	576	400/448	440	480	540	64
	667	463/519	509	556	625	668
	720	500/560	550	600	668	668
	833	578/647	636	668	668	668
19920	50	25.1/28	28	30	34	40
	100	50.2/56	55	60	68	80
	200	100.4/112	110	120	135	16
	333	167/187	184	200	225	267
	400	200.8/224	220	240	270	32
	500	250/280	275	300	338	400
	667	335/375	369	402	452	536
	833	418/468	460	502	564	668

**55/65°C rise rating on VR-32 regulators gives an additional 12% increase in capacity if the tap changer's maximum current rating has not been exceeded. For loading in excess of the above values please refer to the factory.

INTERNAL CONSTRUCTION & WIRING DIAGRAMS

The main core-and-coil assemblies are of the shell-form configuration. The series winding on the input (source) side of the regulator (Figure 1-9) allows all windings (control, shunt, and series) to be located in one coil. The load voltage is read directly by the control winding.

Regulators that have the series winding on the output (load) side (Figure 1-10) possess an identical coil configuration, but have a separate potential transformer in lieu of a control winding installed on the output side. This voltage is then applied to the sensing circuit of the control.

The control winding is wound on the core to obtain a supply voltage for the tap changer motor and the control sensing circuits. Taps are available on this winding for large-step voltage-ratio correction.

The shunt winding is wound over top of the control winding with the series winding wound over top of the shunt winding. Most regulators, depending upon the rating, have an equalizer winding. If applicable, the equalizer winding is wound on the outside of the coil over the series winding.

Figure 1-11 shows a regulator power circuit with a series transformer. This design is utilized when the load current rating exceeds the tap changer rating. Figure 1-12 shows the internal construction of this regulator. In this type of design, the series transformer winding losses are a function of the load alone and are independent of the tap position. Because of this, limiting the range of voltage regulation does not reduce losses and therefore, the ADD-AMP feature is not applicable.

The preventive auto or bridging reactor is a core-form design, consisting of a coil on each leg of the core. The inside half of one coil is connected to the outside half of the other coil and vice versa, providing equal current in each half of the reactor winding. This interlacing of the two coils reduces the interwinding leakage reactance to a very low value. The reactor is completely isolated from ground by stand-off insulators since the reactor coil is at line voltage above ground. The reactor core, core clamps, and other associated parts approach this level.

The current transformer is a toroid, through which the load current passes. It furnishes a current proportional to load current to the line-drop compensator circuit in the control and to optional metering packages.

The tap changer enables the regulator to provide regula:ion in smooth, accurately proportioned steps at a controlled speed that minimizes arcing and extends contact life. Four different tap changers are used throughout the line of regulator ratings. Figures 1-13 through 1-16 illustrate typical internal wiring schemes of the various types of regulator constructions. Most of the wiring is on the tap changer itself. Application, troubleshooting, and operation of the spring- and direct-drive tap changers and related components are covered extensively in *Service Manual S225-10-2.*

The terminal board inside the junction box on the cover connects the internal tank wiring to the position indicator and control. The junction box wiring is shown in Figure 4-1, page 4-2.

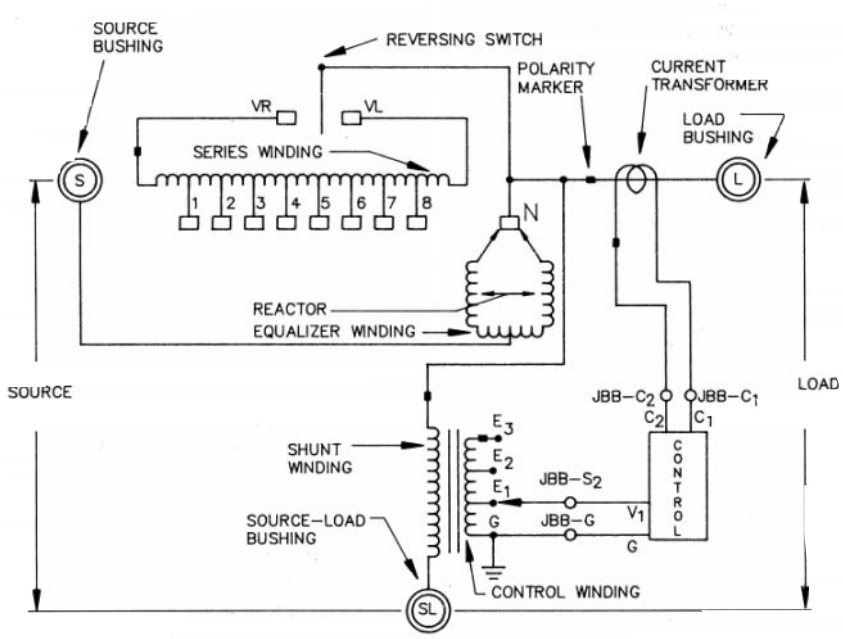

Figure 1-9.
Power circuit - series winding located on the source-side.
(ANSI Type B)

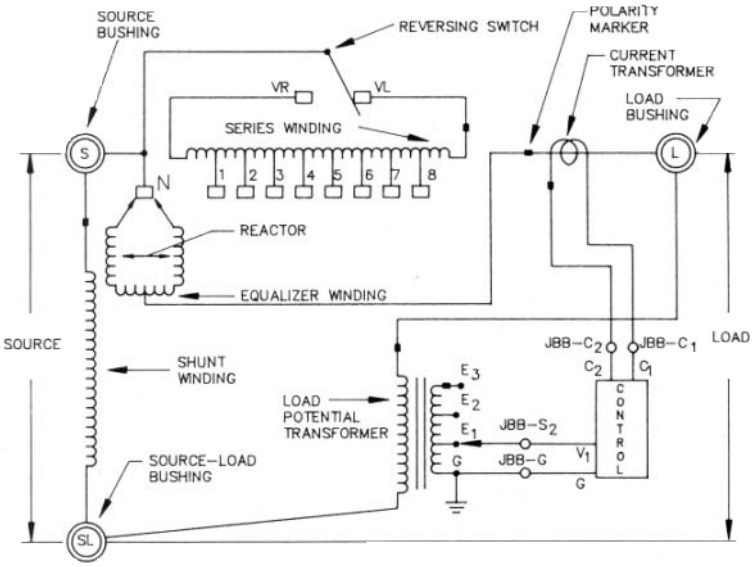

Figure 1-10.
Power circuit-series winding located on the load-side.
(ANSI Type A)

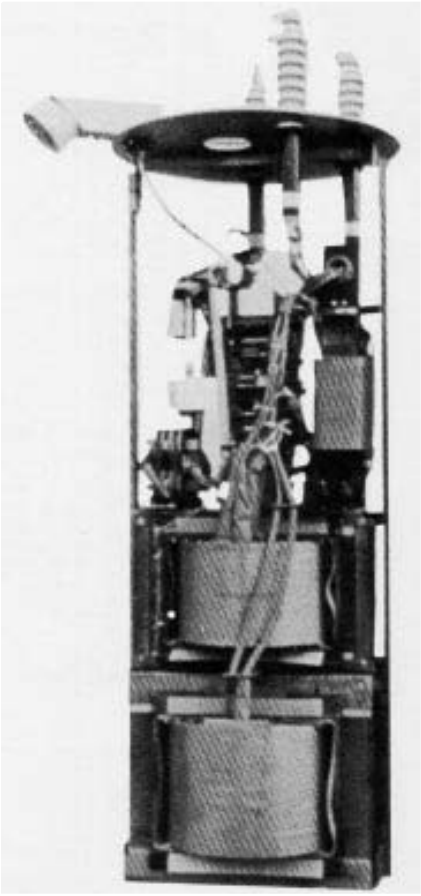

Figure 1-12.
Series transformer design.

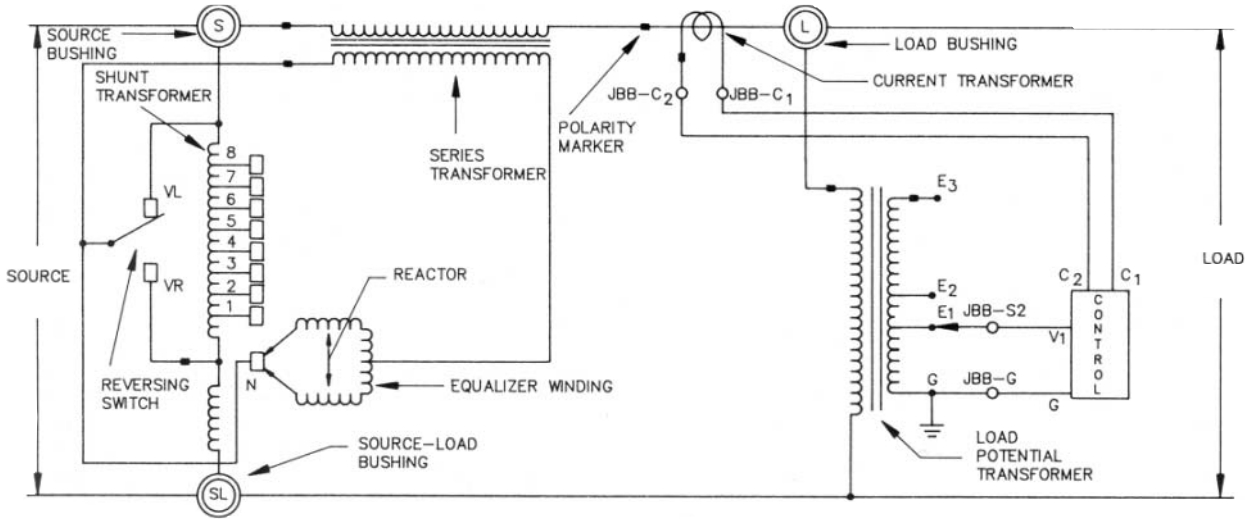

Figure 1-11.
Power circuit-series transformer.

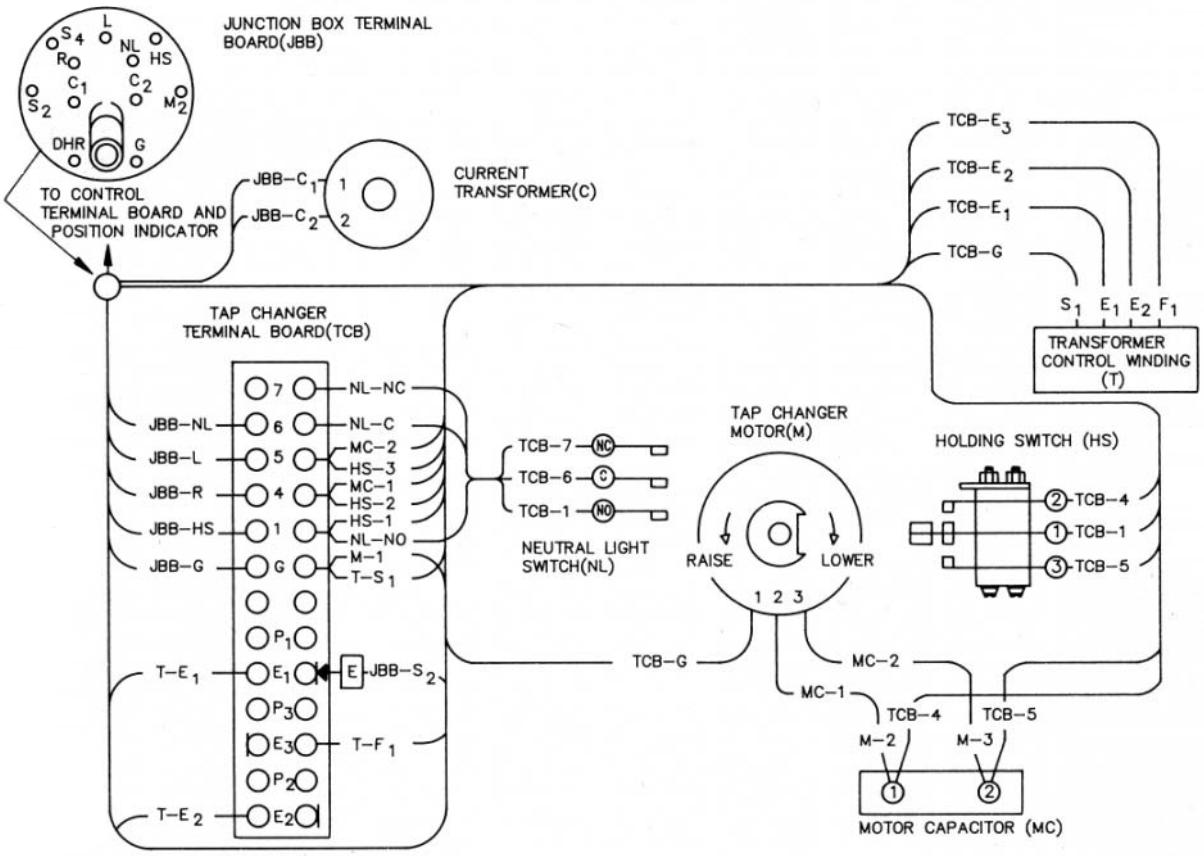

HS-1 — BLACK
HS-2 — BLUE
HS-3 — RED
JBB-C1 — WHITE
JBB-C2 — BLACK
JBB-G — WHITE
JBB-HS — ORANGE
JBB-L — GRN/BLK
JBB-NL — RED/BLK
JBB-R — BLUE
JBB-S_2 — WHITE

M-1 — WHITE
M-2 — BLUE
M-3 — RED
MC-1 — BLUE
MC-2 — RED
NL-C — WHITE
NL-NC — GREEN
NL-NO — ORANGE
T-E_1 — WHITE
T-E_2 — WHITE
T-F_1 — WHITE
T-S_1 — WHITE

TCB-1(HS) — BLACK
TCB-1(NL) — ORANGE
TCB-4 — BLUE
TCB-5 — RED
TCB-6 — WHITE
TCB-7 — GREEN
TCB-E_1 — WHITE
TCB-E_2 — WHITE
TCB-E_3 — WHITE
TCB-G — WHITE

Figure 1-13.
Internal wiring of spring-drive regulator with series winding located on the source side.

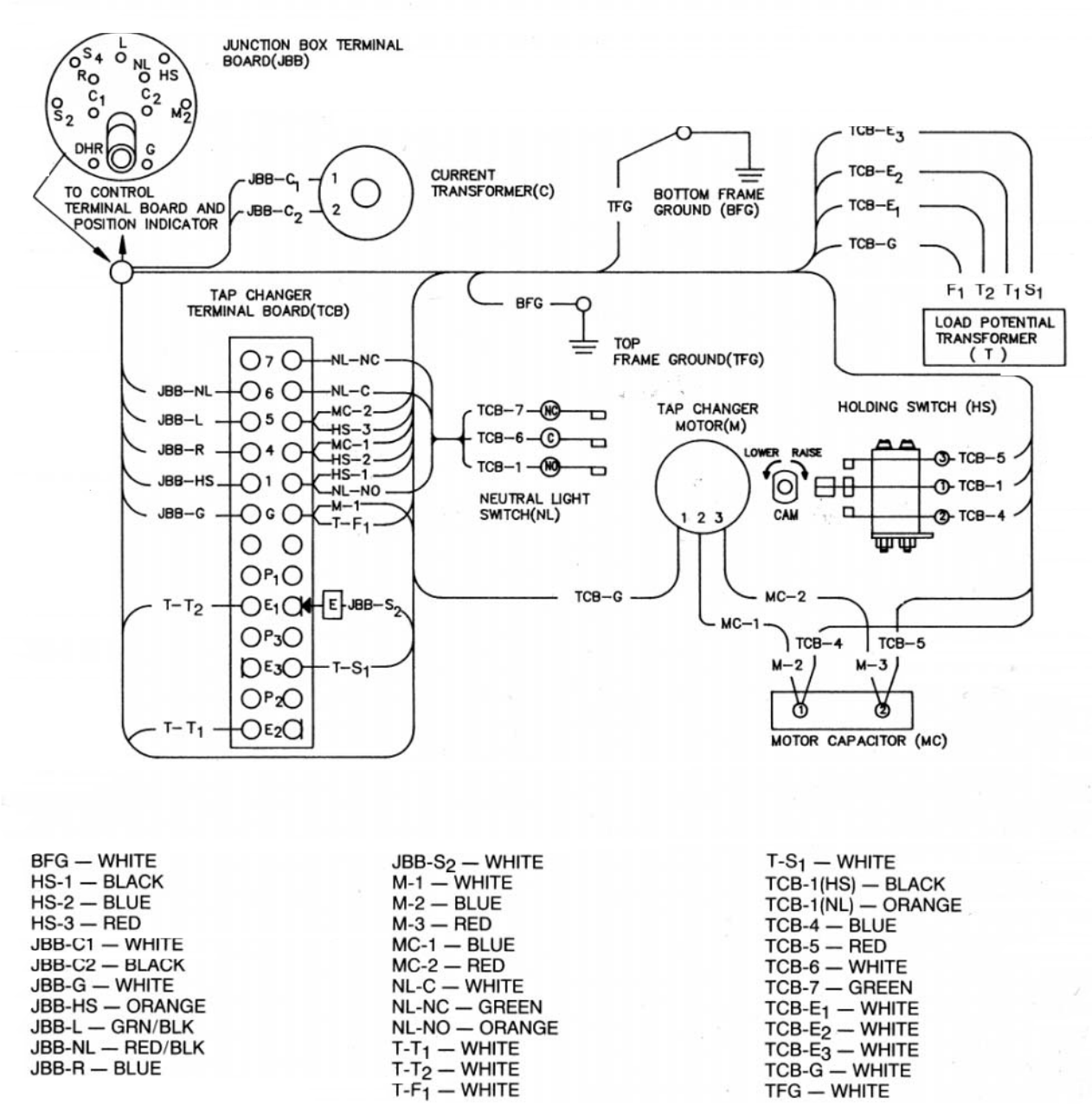

BFG — WHITE
HS-1 — BLACK
HS-2 — BLUE
HS-3 — RED
JBB-C1 — WHITE
JBB-C2 — BLACK
JBB-G — WHITE
JBB-HS — ORANGE
JBB-L — GRN/BLK
JBB-NL — RED/BLK
JBB-R — BLUE

JBB-S_2 — WHITE
M-1 — WHITE
M-2 — BLUE
M-3 — RED
MC-1 — BLUE
MC-2 — RED
NL-C — WHITE
NL-NC — GREEN
NL-NO — ORANGE
T-T_1 — WHITE
T-T_2 — WHITE
T-F_1 — WHITE

T-S_1 — WHITE
TCB-1(HS) — BLACK
TCB-1(NL) — ORANGE
TCB-4 — BLUE
TCB-5 — RED
TCB-6 — WHITE
TCB-7 — GREEN
TCB-E_1 — WHITE
TCB-E_2 — WHITE
TCB-E_3 — WHITE
TCB-G — WHITE
TFG — WHITE

Figure 1-14.
Internal wiring of direct-drive regulator with series winding located on the load side.

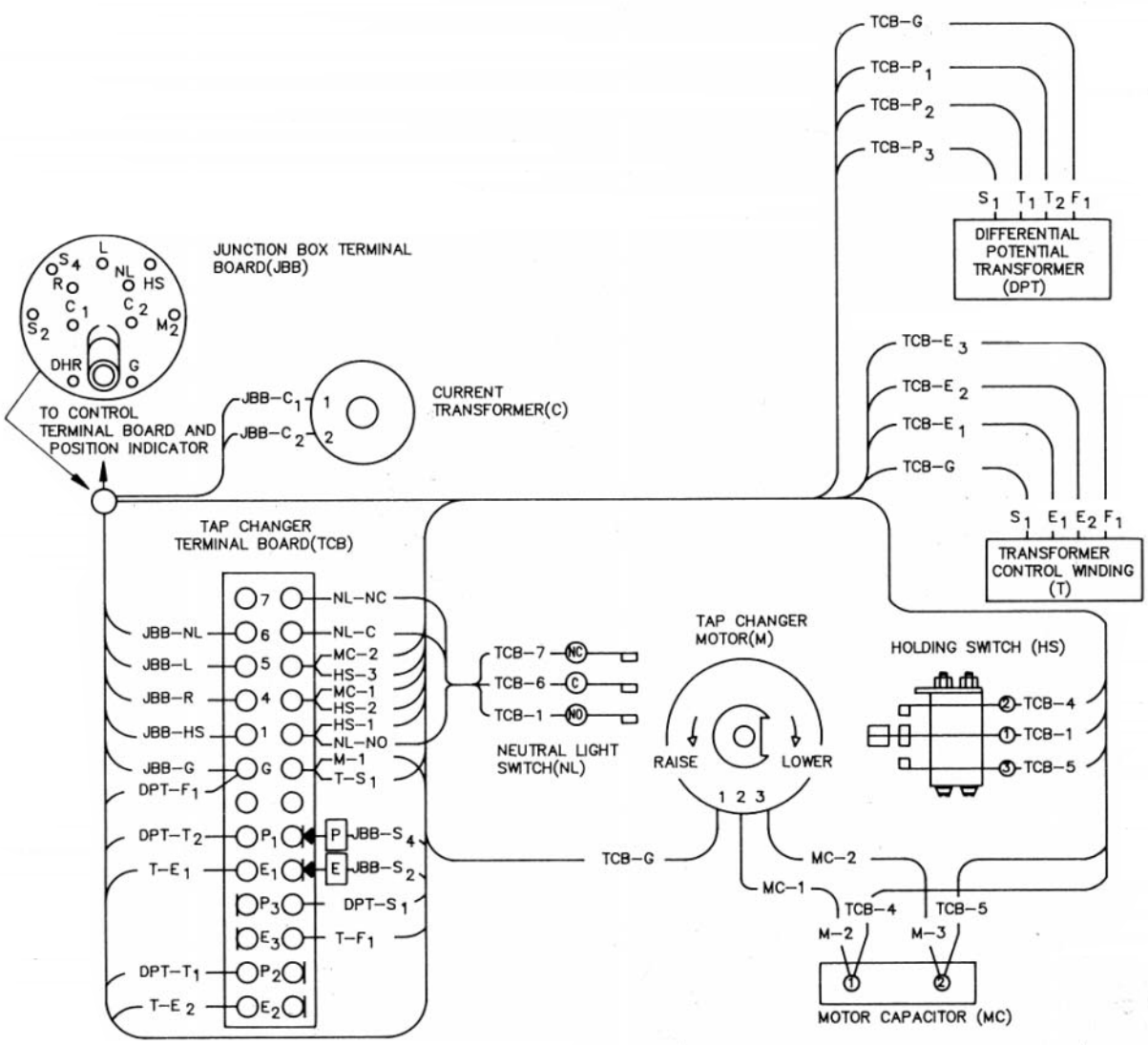

DPT-F1 — WHITE
DPT-S1 — WHITE
DPT-T1 — WHITE
DPT-T2 — WHITE
HS-1 — BLACK
HS-2 — BLUE
HS-3 — RED
JBB-C1 — WHITE
JBB-C2 — BLACK
JBB-DHR — ORG/BLK
JBB-G — WHITE
JBB-HS — ORANGE
JBB-L — GRN/BLK
JBB-NL — RED/BLK
JBB-R — BLUE
JBB-S2 — WHITE
JBB-S4 — WHITE
M-1 — WHITE
M-2 — BLUE
M-3 — RED
MC-1 — BLUE
MC-2 — RED
NL-C — WHITE
NL-NC — GREEN
NL-NO — ORANGE
T-F1 — WHITE
T-T1 — WHITE
T-T2 — WHITE
T-S1 — WHITE
TCB-1(HS) — BLACK
TCB-1(NL) — ORANGE
TCB-4 — BLUE
TCB-5 — RED
TCB-6 — WHITE
TCB-7 — GREEN
TCB-E1 — WHITE
TCB-E2 — WHITE
TCB-E3 — WHITE
TCB-G — WHITE
TCB-P1 — WHITE
TCB-P2 — WHITE
TCB-P3 — WHITE

Figure 1-15.
Internal wiring of regulator with series winding on input side, with differential potential transfomrer.

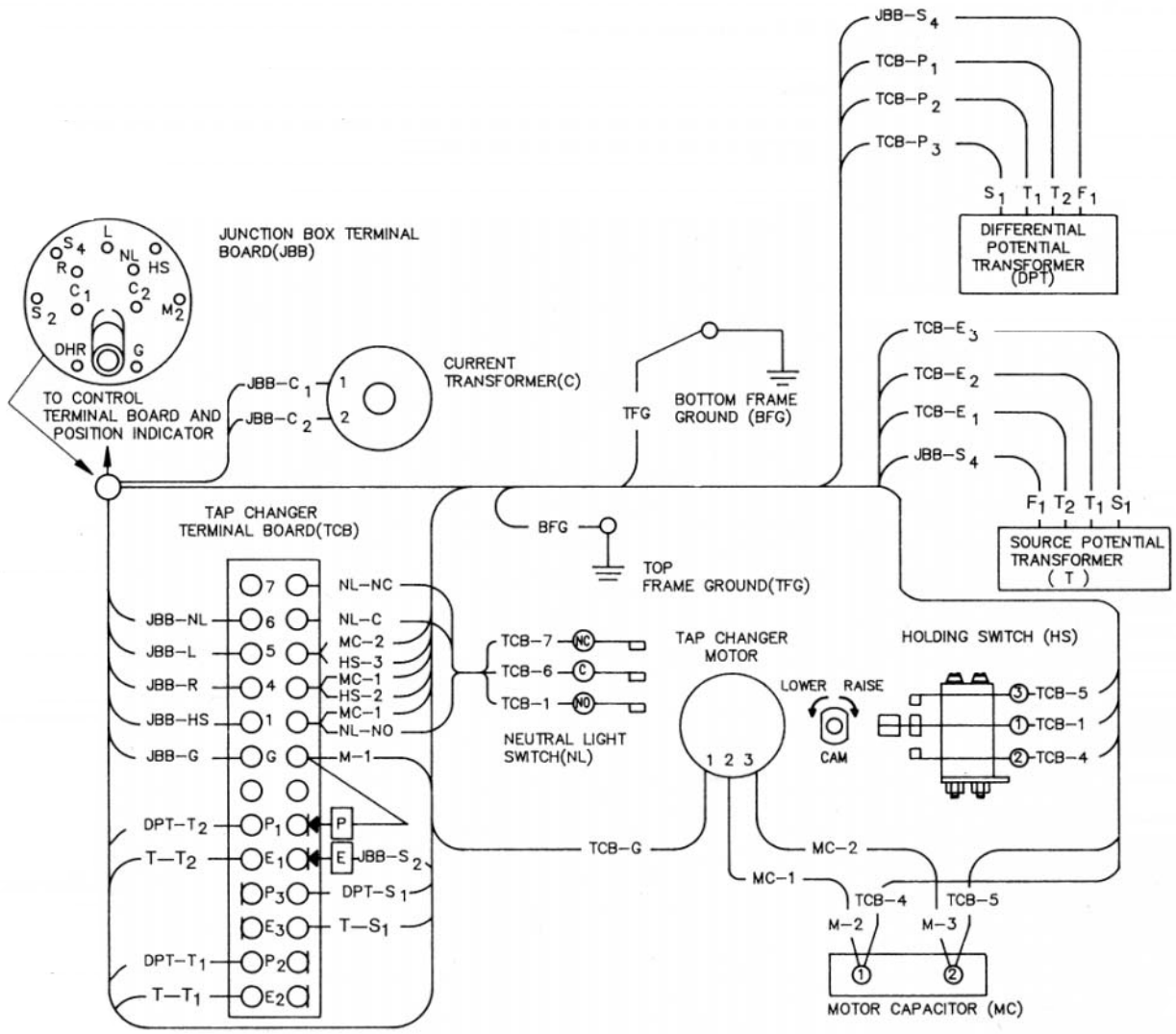

DPT-F_1 — WHITE
DPT-S_1 — WHITE
DPT-T_1 — WHITE
DPT-T_2 — WHITE
HS-1 — BLACK
HS-2 — BLUE
HS-3 — RED
JBB-C1 — WHITE
JBB-C2 — BLACK
JBB-DHR — ORG/BLK
JBB-G — WHITE
JBB-HS — ORANGE
JBB-L — GRN/BLK
JBB-NL — RED/BLK

JBB-R — BLUE
JBB-S_2 — WHITE
JBB-S_4 — WHITE
M-1 — WHITE
M-2 — BLUE
M-3 — RED
MC-1 — BLUE
MC-2 — RED
NL-C — WHITE
NL-NC — GREEN
NL-NO — ORANGE
T-F_1 — WHITE
T-T_1 — WHITE
T-T_2 — WHITE

T-S_1 — WHITE
TCB-1(HS) — BLACK
TCB-1(NL) — ORANGE
TCB-4 — BLUE
TCB-5 — RED
TCB-6 — WHITE
TCB-7 — GREEN
TCB-E_1 — WHITE
TCB-E_2 — WHITE
TCB-E_3 — WHITE
TCB-G — WHITE
TCB-P_1 — WHITE
TCB-P_2 — WHITE
TCB-P_3 — WHITE

Figure 1-16.
Internal wiring of regulator with load winding on output side, with differential potential transformer.

JBB-G — WHITE
JBB-HS — ORANGE
RLS-1 — BLUE
LLS-1 — GREEN/BLACK
JBB-NL — RED/BLACK
JBB-DHR — ORANGE/BLACK
JBB-S_2 — BLACK
JBB-C_2 — GREEN
JBB-C_1 — RED
TB_2-HS — ORANGE
TB_8-1 — BLUE
TB_2-R_3 — BLUE
TB_2-L_3 — WHITE/GREEN
TB_8-3 — WHITE/GREEN
TB_2-NL — WHITE/RED
TB_2-DHR — WHITE/ORANGE
TB_2-V_S — BLACK
RCT_1-120 — BLACK
SD_1-1 — VIOLET
TB_2-C_3 — GREEN
RCT_2 — WHITE/BROWN
RCT_1 — BLACK
TB_7-V_6 — WHITE/BROWN
TB_7-V_1 — BLACK
PD_1-2 (V_6) — WHITE/BROWN
PD_1-2 (V_1) — BLACK
RCT_2-COM — WHITE
TB_1-C_2 — VIOLET
TB_2-C_1 — RED
RCT_1-COM — WHITE
TB_7-G — WHITE
TB_2-V_M — WHITE/BLACK
TB_1-V_4 — BLACK
PD_1-2 (RCT_2) — WHITE/BROWN
PD_1-2 (RCT_1) — BLACK
TB_8-4 — WHITE
TB_1-R_1 — BLUE
TB_1-L_1 — WHITE/GREEN
TB_2-G — WHITE
TB_2-B_R — WHITE/BLUE
TB_8-5 — WHITE/BLUE
TB_1-V_S — BLACK
RCT_1-127 — WHITE/BLACK
SD_1-2 — RED
TB_1-C_3 — GREEN
TB_1-H_S — ORANGE
TB_1-NL — WHITE/RED
TB_1-DHR — WHITE/ORANGE

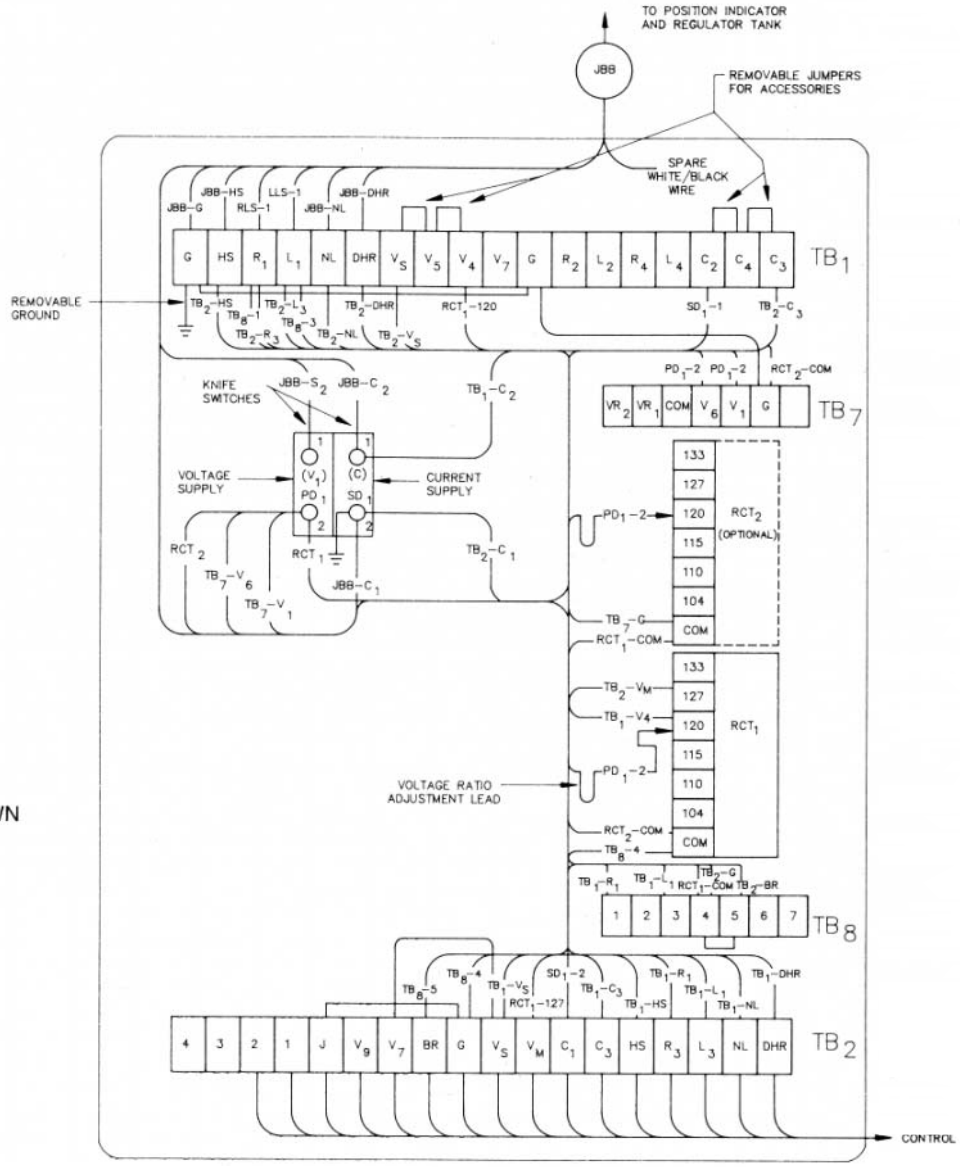

Figure 1-17.
Back panel signal circuit.

NOTES:

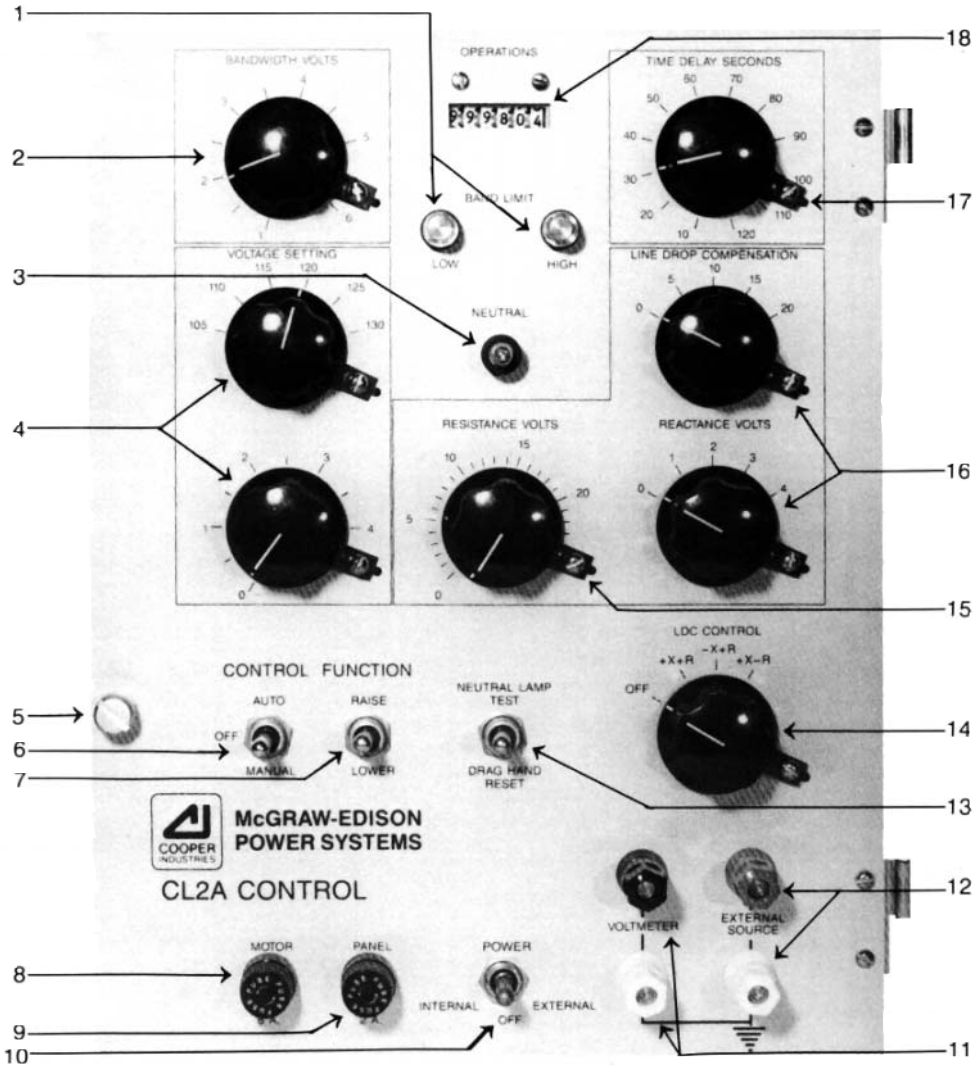

1. Band Edge Indicators
2. Voltage Bandwidth
3. Neutral Indicating Light
4. Voltage Level
5. Panel Locking Screw
6. AUTO/OFF/MANUAL Switch
7. RAISE/LOWER Switch
8. Motor Fuse
9. Panel Fuse
10. INTERNAL/EXTERNAL Power Switch
11. Voltmeter Terminals
12. External Power Terminals
13. Neutral Lamp Test/Drag Hand Reset Switch
14. Line Drop Compensator Control (polarity adjustment)
15. Resistance Volts, Line Drop Compensator
16. Reactance Volts, Line Drop Compensator
17. Time Delay
18. Operations Counter

Figure 2-1.
CL-2A Front Panel.

CL-4C REGULATOR CONTROL • Section 2

INTRODUCTION

The CL-2A Control

The purpose of the CL-2A Control, as any control, is to initiate output actions in response to changing input conditions, as a function of the programmable control characteristics (settings). The regulator control must also perform to the ANSI C57.15 Class I accuracy specificiations overthe -4O°C, +85°C range. It must be sufficiently well protected against damaging transients and surges, it must be reliable, and it must be cost effective. The CL-2A regulator control meets these requirements.

The CL-2A Control is an enhancement of the proven CL-2 control design. This concept utilizes much of the same hardware as the CL-2, but the printed circuit board has been redesigned to incorporate the latest in microprocessor technology. Additional design changes include:

1. The 5-position rotary control switch has been replaced with two toggle switches to help reduce operator error.
2. The test rheostat was removed to improve reliability and reduce the chance of operator error.
3. The drag hand reset and neutral light test functions have been separated and are now implemented via a toggle switch.
4. The neutral light was replaced with a high intensity amber neon cartridge to improve visibility.

These changes are directed at making the CL-2A easier to operate and to further improve upon the reliability that was characteristic of the CL-2.

PRE-INSTALLATION OPERATIONAL CHECK

The CL-2A Control has the facilities for either manual or automatic operation of the tap changer, with either an internal source of power (the regulator) or an external source. To perform an operation check of the control before installing the regulator, follow these steps:

1. Connect the three high-voltage bushings together and ground them.
2. Place the POWER switch in the OFF position and the AUTO/OFF/MANUAL switch in the OFF position.
3. Connect a 120 volt 50/60 hertz source to the EXTERNAL SOURCE terminals. The grounded side of the external source must connect to the ground (white) terminal on the control.
4. Place the POWER switch in the EXTERNAL position.
5. Move the AUTO/OFF/MANUAL switch to MANUAL and depress and hold the RAISE/LOWER momentary toggle switch. Allow the tap changer to operate to 16L, the 10% buck position.
6. Now hold up on the RAISE/LOWER momentary toggle switch. Allow the tap changer to operate to 16R, the 10% boost position.
7. Move the AUTO/OFF/MANUAL switch to AUTO. Turn the coarse VOLTAGE SETTING counterclockwise for a LOWER operation. Permit the tap changer to operate for approximately eight to ten steps. Check to ensure that the operation counter is registering tap changes.
8. Turn the coarse VOLTAGE SETTING clockwise for a RAISE operation. Permit the tap changer to operate for approximately eight to ten steps, checking the operation counter to ensure it is registering tap changes.
9. Return the tap changer to neutral. When on neutral, the NEUTRAL LAMP will light and the POSITION INDICATOR will point to zero.
10. Place the AUTO/OFF/MANUAL switch in the OFF position.
11. Press down on the momentary toggle switch labeled DRAG HAND RESET. The position indicator drag hands will reset to neutral.
12. Turn the POWER switch to OFF and disconnect the 120 volt source from the EXTERNAL SOURCE terminals.
13. Remove the shorting connection from the high-voltage bushings and disconnect the ground.

IN-SERVICE CALIBRATION CHECK

The calibration of the CL-2A Control can be checked while the regulator is in-service. However, the user must understand that field calibration checks are only an **indication** of calibration, and are not nearly as precise as the procedure described in the Control Trouble Shooting section of this manual, which is a laboratory process.

1. Connect the accurate true-RMS responding voltmeter of at least 3000 ohms impedance to the VOLTMETER terminals.
2. If line drop compensation is being used, turn the LDC control to the OFF position.
3. Manually operate the regulator three or four steps above the set point (voltage level setting), and then place the AUTO/OFF/MANUAL switch on AUTO. After the time delay period, the regulator should step down to within the top band edge. (Example: 120 V and 2 V BW = 121 V top band edge.)
4. Manually operate the regulator three or four steps below the set point (voltage level setting), and then place the AUTO/OFF/ MANUAL switch on AUTO. After the time delay period, the regulator should step up to within the lower band edge. (Example: 120 V and 2 V BW = 119 V lower band edge.)
5. The average of these two voltage readings is approximately the set point of the control.
6. Return the control knobs and switches to their previous positions.

SPECIFICATIONS

A. Physical size	10-3/8"W, 13"H, 6"D
B. Weight	9-3/4 lbs.
C. Burden at 120 volt	6VA
D. Operating temperature range	-40°C to +85° C
E. Control Svstem Accuracy	ANSI C57.15 Class I

SETTING THE CL-2A CONTROL FOR SERVICE

This section describes the user selectable control settings and aides in determining the correct values for the application. There are a total of seven control settings to be determined:

1. Voltage setting, continuously variable from 105 to 135 volts.
2. Bandwidth setting, variable from 1 volt to 6 volts in 0.5 volt increments.
3. Time delay setting, variable from 10 seconds to 120 seconds in 10 second increments, or by using the time doubling feature, from 20 seconds to 240 seconds in 20 second increments.
4. Line drop compensation for resistance, continuously variable from 0 to 24 volts.
5. Line drop compensation for reactance, continuously variable from 0 to 24 volts in 1 volt increments.
6. Line drop compensation control switch for establishing the polarity (±) for each of the R & X line drop compensation elements.
7. Control operating mode, selectable between sequential mode, time integrating, or voltage averaging. This feature is implemented via a dip switch, located on the printed circuit board.

Voltage Setting

All Cooper Power Systems VR-32 regulators have provisions for operation at system voltages lower than the nameplate rating. The correct voltage setting for the application is dependent upon the regulator rating and the system voltage on which it is installed. The regulator nameplate always indicates the voltage setting for the given application that produces an output regulated to the 120 volt base voltage. (This is explained in detail in the Control operation section of the manual, page 2-4.) The user simply sets the voltage setting for the value indicated on the nameplate, unless it is desired to operate at a higher or lower voltage level than nominal.

Bandwidth

The bandwidth is defined as the total voltage range around the voltage setting which the control will consider as a satisfied condition. As an example, a 2V bandwidth on a 120 volt setting means the operational timer will not activate until the voltage is below 119V or above 121 V. When the voltage is in-band, the band edge lights are off and the timer (time delay) is off, so no relay closure can occur. Selection of a small bandwidth will cause more tap changes to occur, but will provide a more “tightly” regulated line. Conversely, a larger bandwidth results in fewer tap changes, but at the expense of better regulation. Selection of the bandwidth and time delay settings should be made recognizing the interdependence of these two parameters.

Time Delay

The time delay is the period of time (in seconds) that the control waits from when the voltage first goes out-of-band to when the relay closure occurs. If a rapid response is required, a smaller setting should be used. If several devices on the same line are to be coordinated, longer time delay settings may be required to allow the proper devices to operate in the desired sequence.

On the front panel of the CL-2A regulator control, the time delay values are prominently marked through 120 seconds. A feature of this control, called time doubling, permits time delay sequences up to 240 seconds to occur. This feature simply doubles the actual setting shown by the switch on the panel. It is implemented by setting position 4 on the dip switch, located on the printed circuit board (Figure 2-2).

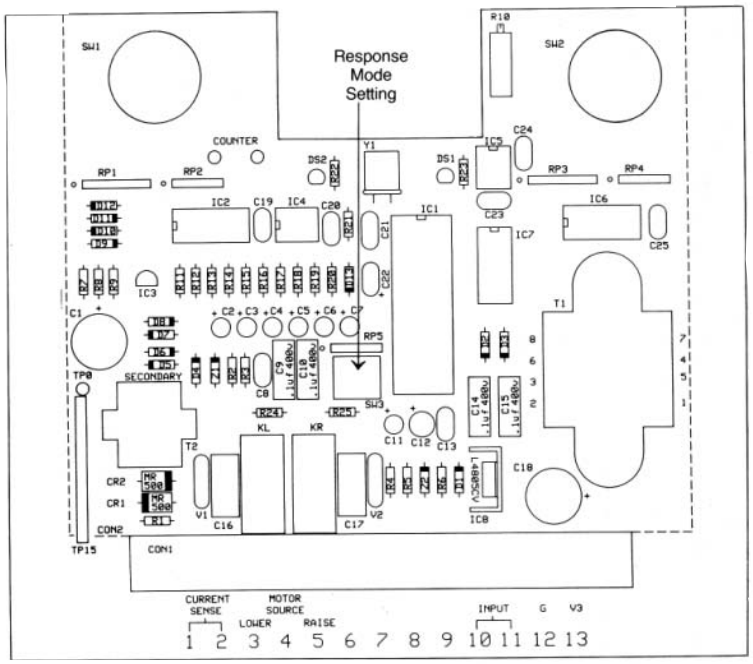

Figure 2-2.
Printed Circuit board.

Line Drop Compensation, Resistance and Reactance Settings

Quite often regulators are installed some distance from the theoretical load center or the location at which the voltage is attempted to be regulated. This means the load will not be served at the desired voltage level due to the losses (voltage drop) on the line between the regulator and the load. Furthermore, as the load increases, line losses also increase causing the lowest voltage condition to occur during the time of heaviest loading. This is the least desirable time for this to occur.

To provide the regulator with the capability to regulate at a "projected" load center, line drop compensation elements are incorporated on the control. This circuitry consists of a current source (C.T.), which is proportional to the load current, and resistive (R) and reactive (X) elements through which this current flows. As the load current increases, the resulting C.T. current flowing through these elements produces voltage drops which simulate the voltage drops on the primary line. This causes the "sensed" voltage to be correspondingly altered, therefore, the control responds by operating based upon this pseudo load center voltage.

To select the proper R and X values, the user must know several factors about the line being regulated. Cooper Power Systems has prepared reference document R225-10-1 to assist in this determination. Once the proper values are determined, they can be set by simply setting the front panel R & X control knobs accordingly.

Line Drop Compensation Control Switch

When line drop compensation is used, the correct polarity of the resistance and reactance elements is necessary for proper regulation. On four-wire wye connected systems, the polarity selector is always set for +X and +R values. On delta connected systems, however, the line current is 30° displaced from the linetoline voltage (assuming 100% power factor). As a result of this displacement, the polarity of the appropriate R or X element must be reversed. The setting of the selector switch may be on +X+R, -X+R or +X-R settings. The correct polarity determination is explained in detail in supplement R225-10-1. Note also that the line drop compensation control switch has an off position to bypass the compensator circuit entirely. This is convenientfor test purposes so that the user does not need to disturb the preset R and X values.

CONTROL OPERATION MODES

A selection of three modes in which the control responds to out-of-band conditions is provided. This permits the user to select the mode that best fits the application. These modes are sequential, time integrating, and voltage averaging.

SEQUENTIAL

This is the standard mode of response as shipped from the factory. When the load voltage goes out-of-band, the time delay circuit is activated. At the end of the time-out, a tap change is initiated. After each tap change a two-second pause occurs to permit the control to sample the voltage again. This sequence continues until the voltage is brought into band, at which time the timing circuit is reset. Any time the voltage goes in-band, the timer is reset.

TIME INTEGRATING

This mode is activated by turning on (sliding upward) dip switch position #2, as shown in Figure 2-2. When the load voltage goes out-of-band, the time delay circuit is activated. At the end of the time out, a tap change is initiated. After each tap change, a two-second pause occurs to permit the control to sample the voltage again. If the voltage is still out-of-band, another tap change is performed. This sequence continues until the voltage is brought into band. When the voltage goes in-band, the timer is decremented at a rate of 1.1 until it reaches zero.

VOLTAGE AVERAGING

This mode is activated by turning on (sliding upward) dip switch position #1, as shown in Figure 2-2. When the load voltage goes out-of-band, the time delay circuit is activated. During this time delay period, the microprocessor monitors and averages the instantaneous load voltage. It then computes the number of tap changes required to bring the average voltage back to the set voltage level. When the time delay period is complete, the computed number of tap changes are performed without any delay between them. A maximum of five consecutive tap changes will be allowed before the time delay circuit is reset to avoid an accumulative error. The timer is not reset on voltage excursions in-band, unless the voltage stays in-band for at least 10 seconds. An error-averaging characteristic is inherent with the voltage averaging mode.

To permit sufficient time for the microprocessor to average the voltage, the time delay period must be 30 seconds or longer. If the time delay is set for less than 30 seconds, the control reverts to the sequential mode of operation.

If the time integrating and voltage averaging dip switch settings are both in the ON position, the control will revert to the sequential response mode.

CL-2A CONTROL OPERATION

This section describes the CL-2A regulator control design and operation. The overall system schematic is shown in Figure 2-3. This is described in segments to aid in the understanding of the VR-32 regulator with the CL-2A Control.

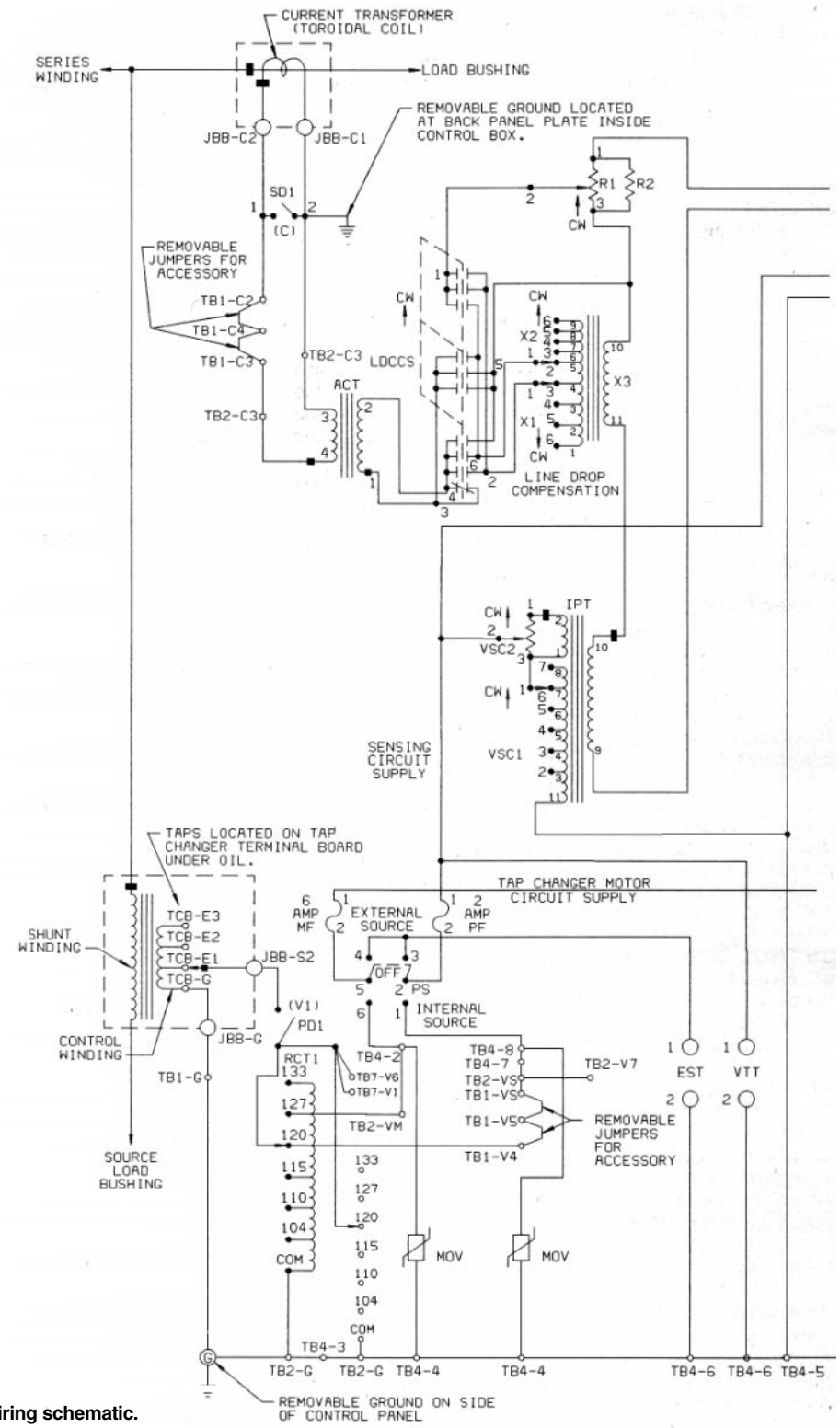

Figure 2-3.
VR-32 Regulator and CL-2A Control wiring schematic.

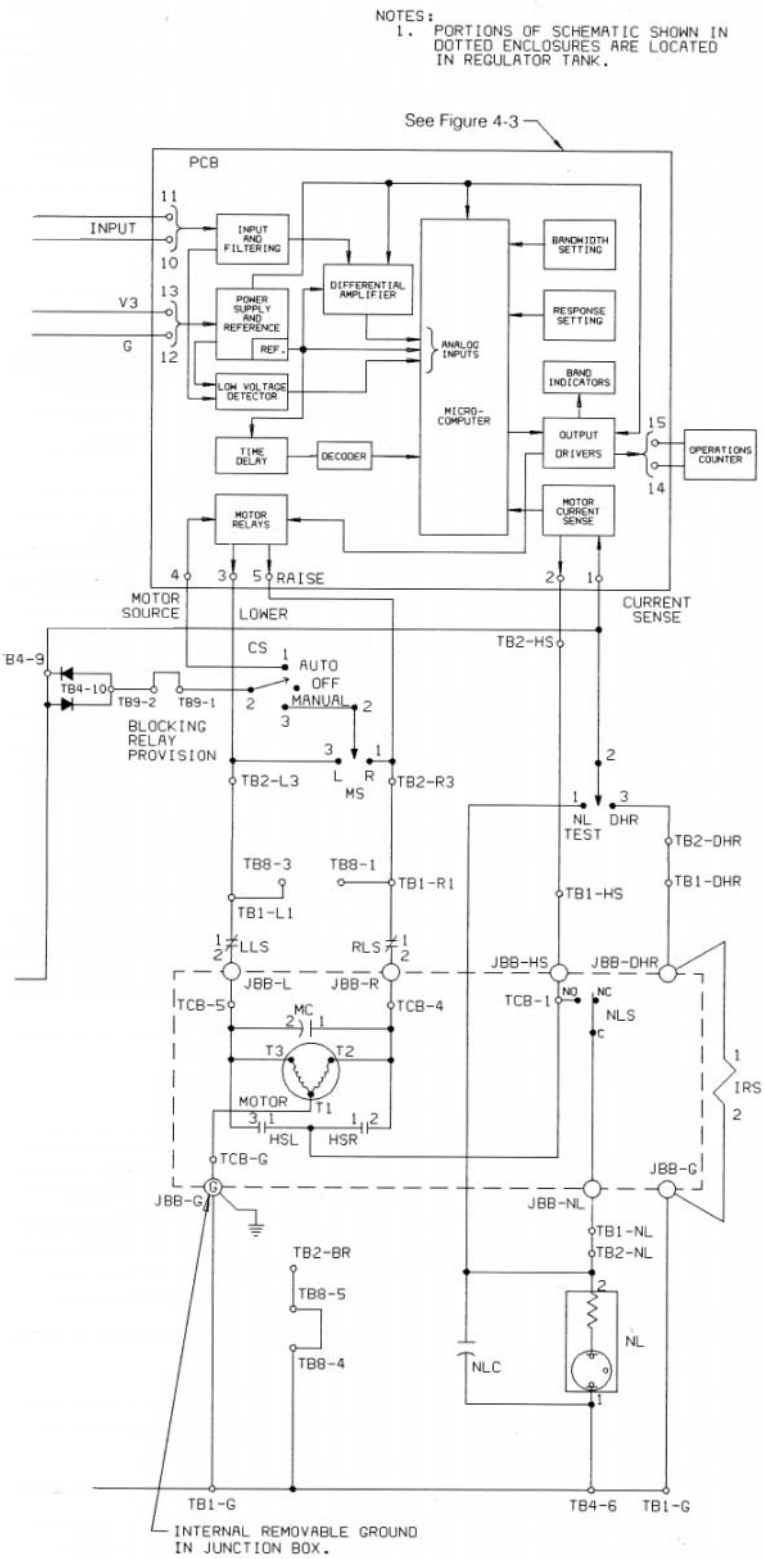

ACT	— AUXILIARY CURRENT TRANSFORMER
CS	— CONTROL SWITCH
DHR	— DRAG HAND RESET
EST	— EXTERNAL SOURCE TERMINALS
HSL	— HOLDING SWITCH LOWER
HSR	— HOLDING SWITCH RAISE
IPT	— INPUT POTENTIAL TRANSFORMER
IRS	— INDICATOR RESET SOLENOID (POSITION INDICATOR)
JBB	— JUNCTION BOX TERMINAL BOARD ON THE COVER
LDCCS	— LINE DROP COMPENSATION CONTROL SWITCH
LLS	— LOWER LIMIT SWITCH (POSITION INDICATOR)
MC	— MOTOR CAPACITOR
MF	— MOTOR FUSE
MOV	— METAL OXIDE VARISTOR FOR SURGE PROTECTION
NL	— NEUTRAL LIGHT
NLC	— NEUTRAL LIGHT CAPACITOR
NLS	— NEUTRAL LIGHT SWITCH
PCB	— PRINTED CIRCUIT BOARD
PD	— POTENTIAL OPENING DEVICE
PF	— PANEL FUSE
PS	— POWER SWITCH
R1	— LINE DROP COMPENSATING RESISTANCE SETTING
R2	— TRIM RESISTOR
RCT	— RATIO CORRECTION TRANSFORMER
RLS	— RAISE LIMIT SWITCH (POSITION INDICATOR)
SD	— CURRENT SHORTING DEVICE
TB	— CONTROL TERMINAL BOARD
TCB	— TAP CHANGER TERMINAL BOARD
VM	— MOTOR VOLTAGE
VS	— SENSING VOLTAGE
VSC1	— COARSE VOLTAGE SETTING CONTROL
VSC2	— FINE VOLTAGE SETTING CONTROL
VTT	— VOLTAGE TEST TERMINALS
X1	— LINE DROP COMPENSATING REACTANCE COARSE SETTING
X2	— LINE DROP COMPENSATING REACTANCE FINE SETTING
X3	— LINE DROP COMPENSATION REACTOR

Development of Potentials (Voltage Circuits)

All Cooper Power Systems VR-32 regulators have provisions for operation at system voltages lower than the nameplate rating, as illustrated by Table 2-1. This is accomplished by providing a voltage sensing potential winding with taps which roughly correspond to the appropriate system voltage. This source may be either a winding on the main core/coil assembly, or a separate potential transformer located on the output (load) side of the regulator. The taps from this source are brought to a terminal board located on top of the tap changer assembly, under oil (see Figure 2-4). The connections are made with push-on terminals and are easily accessed through the handhole.

The tapped potential winding cannot always provide adjustment of the voltage fine enough for control purposes. A tapped autotransformer is therefore used for fine voltage adjustment. This transformer is referred to as the Ratio Correcting Transformer (RCT) and has taps at 104, 110, 115, 120, 127, and 133 volts. It is located on the back panel in the control enclosure (see Figure 2-5). To operate a regulator on a system other than its rating, the appropriate selection must be made for the internal tap, RCT tap, and control voltage setting. The nameplate always provides all these values for the common system voltages which are applicable for the rating (see Figure 2-6).

To calculate the appropriate voltage setting for system voltages other than that shown, the following formula can be used (along with Table 2-1)

$$\frac{\text{System Voltage}}{\text{Internal PT Ratio}} \times \frac{120}{\text{RCT Tap Voltage}} = \text{Control Voltage Setting}$$

As an example, consider a 13800V regulator installed on a 12470V system. The calculation is:

$$\frac{12470}{115\ \text{(From Table 2-1)}} \times \frac{120}{104\ \text{(From Table 2-1)}} = \text{125 Control Voltage Setting}$$

Utilize this setting provides regulation at 12470 volts, nominal system voltage.

Table 2-1
VR-32 Tap Connections and Voltage Levels.

Regulator Voltage Rating 1	Nominal Single Phase Voltage 2	Ratio Adjusting Data: Internal Tap. 3	Ratio Adjusting Data: PT Ratio 4	Ratio Adjusting Data: RCT Tap 5	Test Terminal Voltage ** 6	Overall Potential Ratio ** 7
2500	2500	–	20:1	120	125	20:1
	2400	–		120	120	20:1
5000	5000	E1/P1	40:1	120	125	40:1
	4800	E1/P1		120	120	40:1
	4160	E1/P1		104	120	34.7:1
	2400	E2/P2	20:1	120	120	20:1
	7970	E1/P1	60:1	133	120	66.5:1
7620	7620	E1/P1		127	120	63.5:1
	7200	E1/P1		120	120	60:1
	4800	E2/P2	40:1	120	120	40:1
	4160	E2/P2		104	120	34.7:1
	2400	E3/P3	20:1	120	120	20:1
13800	13800	E1/P1	115:1	120	120	115:1
	13200	E1/P1		115	120	110.2:1
	12000	E1/P1		104	120	99.7:1
	7970	E2/P2	57.5:1	133	125	63.7:1
	7620	E2/P2		133	120	63.7:1
	7200	E2/P2		120	125	57.5:1
	6930	E2/P2		120	120.5	57.5:1
14400	14400	E1/P1	120:1	120	120	120:1
	13800	E1/P1		115	120	115:1
	13200	E1/P1		110	120	110:1
	12000	E1/P1		104	115	104:1
	7970	E2/P2	60:1	133	120	66.5:1
	7620	E2/P2		127	120	63.5:1
	7200	E2/P2		120	120	60:1
	6930	E2/P2		115	120.5	57.5:1
19920	19920	–	166:1	120	120	166:1
	17200	–	166:1	104	120	143.9:1

* P taps are used with E taps only on regulators where an internal potential transformer is used in conjunction with the control winding to provide voltage supplies to the control. See nameplate for verification of this type of control supply.

* Test Terminal voltage and overall potential ratio may vary slightly from one regulator to another. See the regulator nameplate for determining the exact valueS.

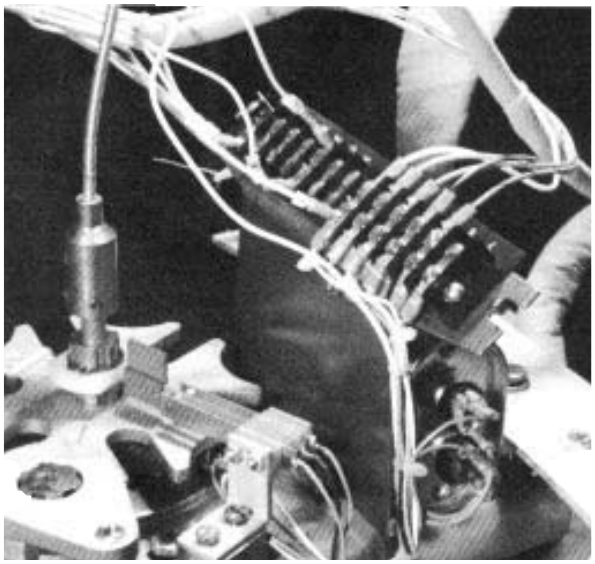

Figure 2-4.
Internal tap terminals.

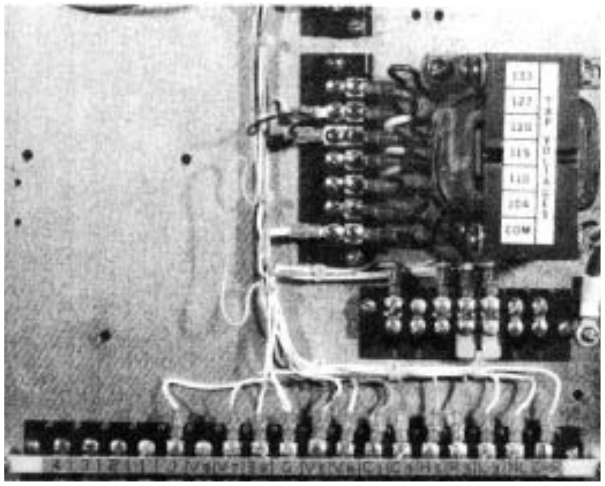

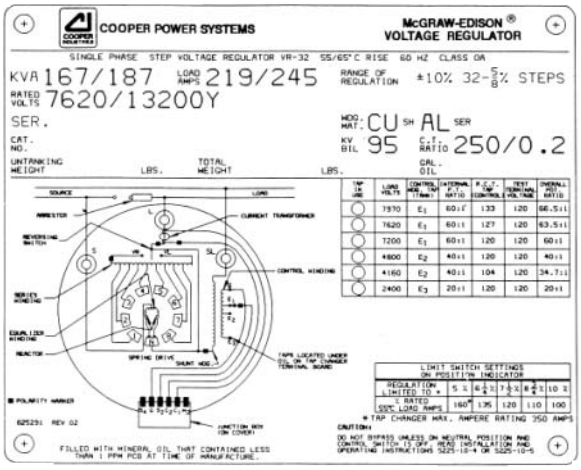

Figure 2-6.
Nameplate.

The voltage developed by the sensing winding is brought from the tap changer terminal board to the junction box terminal board, through the control cable, into the enclosure, and terminates at the knife switch labeled V_1. Opening this knife switch provides a visible means of removing all power to the control and back panel, thus allowing the operator to work safely on the control circuitry while the regulator is energized. From the knife switch, the voltage is ratio corrected by the RCT as previously described. Note, also, that a separation of sensing and motor circuits occurs at this transformer. The motor circuit is routed directly to the control front panel, whereas the sensing potential is brought back to the top terminal strip, through a series of removable jumpers, and then to the front panel. These jumpers permit the easy addition of accessories which compliment the control (voltage limiter, voltage reduction, metering).

Both of the voltage sources are protected against surges on the control front panel, through the use of metal oxide varistors. These potentials are then connected directly to the power switch. Note that the power switch has three positions: INTERNAL/OFF/ EXTERNAL. The INTERNAL position powers the control from the regulator sensing winding, and the EXTERNAL position permits an external 120V supply be used to operate the the regulator and control. When the power switch is in the EXTERNAL position, the internal supply is disconnected to prevent accidentally energizing the high voltage winding and bushings. The external source terminals are prominently located adjacent to the voltmeter test terminals. The voltmeter terminals allow the monitoring of the voltage that is applied to the sensing input transformer.

The two voltage circuits are routed from the power switch to the respective 6 amp motor fuse and 2 amp panel fuses. From the fuse, the motor potential provides power to the auto/manual selector switch, the drag hand reset solenoid, the neutral light, and the holding switch (alternate motor source) circuits. The sensing supply provides power to the printed circuit board. This function is described further in the following section.

Line Drop Compensator (Current Circuit)

All VR-32 regulators are designed with an internal current transformer for the line drop compensator and optional metering devices. Table 2-2 provides the application information for the various C.T.'s used on the Cooper Power regulators. These C.T.'s provide 200 mA rated secondary output for the full load C.T. primary current.

The current developed by the C.T. is brought to the junction box terminal board, through the control cable into the enclosure, and terminates at the knife switch labeled C. Closing the knife switch provides a visible means of shorting the C.T., thus allowing the operator to work safely on the current circuitry. (For additional safety measures, the V_1 knife switch should also be opened.) At this knife switch, one side of the C.T. is connected to the equipment ground, and is also routed to the front panel for connection to the auxiliary current transformer (ACT). The "high" side of the current circuit is brought to the top terminal strip, through a series of removable jumpers, and then to the front panel for connection to the ACT. These jumpers, permit the easy addition of accessories which compliment the control (Meter Pac).

The auxiliary current transformer provides isolation and current transformation from the 200 mA base to 50 mA for the line drop compensation elements. The output from this transformer passes first to the line drop compensator (LDC) control switch before flowing to the resistance and reactance components. The LDC switch provides the ability to bypass the LDC circuit entirely (off position), and change the current direction through either the resistance element (R) or the reactance element (X). This is illustrated by the switch senings +X+R, -X+R, +X-R.

As current flows through the regulator on the primary circuit, a proportional current (on the 200 mA base) is developed in the C.T. secondary. This provides a current flow through the resistive and reactive elements which produces voltage drops (both R & X) with polarities as determined by the LDC control switch. This voltage subtracts vectorially from the voltage sensing signal output of the potential transformer. The end result is that the voltage signal input to the circuit board is altered according to the line current-flow and the values of the resistance and reactance. settings. In this manner, the voltage regulator responds to changes in LOAD as well as changes in VOLTAGE.

TABLE 2-2
Current Tansformer Applications.

Regulator Current Ratings	C.T. Primary Current
15	25
50	50
75	75
100	100
150	150
167, 200	200
219 231, 250	250
289 300	300
328, 334, 347, 400	400
418, 438, 463, 500	500
548, 578, 656, 668	600
833, 875, 1000, 1093	1000
1332, 1665	1600

Motor Circuit

The motor circuit power is brought from the 6-ampfuse, through a set of back-to-back diodes (for current division), to the AUTO/OFF/MANUAL selector switch. When this switch is set for automatic operation, motor power is applied to the relays. An appropriate relay closure then applies this power to the tap changer motor, after first passing through the limit switch contacts in the position indicator. When the switch is set for manual operation, the power is transferred to the momentary toggle switch labeled RAISE/LOWER. By actuating this switch in one direction or the other, power is applied through the limit switch contacts, directly to the tap changer motor, completely bypassing the circuit board.

Also included as a part of the motor circuit is an “alternate feed” to the motor called the “holding switch circuit.” Located on the tap changer is a single-pole, double-throw switch, which is driven by a cam operated off of the tap changing mechanism. Motor rotation closes this switch (one direction or the other), and establishes a complete circuit for motor current until the rotation is complete and the cam drops out. During the time the holding switch is closed, motor current is drawn through an input on the circuit board which permits the control to detect that a tap change is in progress. The microprocessor uses this information in its decision making process, as described in the following section.

Two other unassociated circuits which share the 6 amp motor source are the drag hand reset and neutral light circuits. The drag hand reset function is accomplished simply by operating a momentary toggle switch which applies power to the reset solenoid in the position indicator. The neutral light is similarly actuated for test purposes and it is also energized from a neutral light switch (located on the tap changer) when in the neutral tap position.

AUTOMATIC/MANUAL OPERATION

Automatic

In the automatic mode of operation, the power switch will be set on INTERNAL and the AUTO/OFF/MANUAL switch will be placed on AUTO. The regulator is assumed energized from the primary circuit. If the sequential control response is selected (the standard mode), the control response is as follows:

1. As the primary voltage moves to a level which represents an out-of-band condition, the sensing voltage will correspondingly reflect the same results on the 120V base. Assuming the voltage dropped low, a lower than nominal signal will appear at the printed circuit board input, terminals 10 and 11.
2. The signal is rectified and harmonic filtered before passing into a differential amplifier for comparison with a reference signal. The resulting amplifier output is fed into an analog-to digital converter on the microprocessor chip.
3. The microprocessor, recognizing the voltage condition as low and out-of-band, issues an output which lights the “LOW” band edge LED, and starts an internal timer which is equivalent to the time delay setting.
4. During the time out period, the voltage is continually sensed and sampled. Should the voltage momentarily move into band, the timer is reset.
5. At the end of the time delay period, the microprocessor issues an output which causes the “RAISE” relay coil to be energized. An internal 4-second timer is also started.
6. The tap changer motor begins to turn as a result of the relay closure, and a cam on the tap changer closes the “RAISE” holding switch. This now provides an alternate source for the motor current, which passes through the “current sense” inputs on the circuit board, terminals 1 and 2.
7. The microprocessor now recognizes that current is flowing in the holding switch circuit, and performs three actions: (1) an output is issued which partially increments the operations counter, (2) the RAISE relay is deenergized, thus opening its contacts, and (3) the four second timer is reset.
8. As a result of the relay contact opening, the motor current is now carried solely by the holding switch circuit. When the motor rotation is complete, the holding switch opens as a result of the cam action, and the motor stops.
9. The microprocessor recognizes that the tap change is now complete and issues an output action which completes the incrementing of the operations counter. A two second pause then occurs, allowing the sensing voltage to stabilize from the motor operation. At the end of this pause, the voltage is monitored.
10. If out-of-band conditions still exists, another output is issued to close the RAISE relay, thus starting another tap change sequence (step 5). If the voltage is in-band, the LOW LED is turned off, and the time delay timer is reset. The microprocessor continues to sample the input voltage for a change of positions.

This sequence is altered slightly if the voltage averaging or time integrating mode of operation is selected. These characteristics are described in Section 3 under Control operating Modes.

The CL-2A regulator control also includes a feature called relay retry. If motor current is not detected within four seconds after the relay closes (step 5), the processor opens the relay contacts, and idles for 30 seconds before trying again. This feature is intended to prevent the control from becoming “locked up” in the unlikely event a good electrical contact is not made when the relay contacts close. The control will also enter this retry mode when the limit switches prevent additional tap changes from occurring or if the AUTO/OFF/MANUAL switch is in a position other than automatic.

Manual

In the manual mode of operation, the power switch can be set on either INTERNAL or EXTERNAL, and the AUTO/OFF/MANUAL switch will be placed on MANUAL. If the EXTERNAL position is chosen, an external source must be applied through the terminals on the front panel.

Operation of the momentary toggle switch RAISE/LOWER applies power through the limit switch contacts, directly to the tap changer motor. The printed circuit board still functions as if it were issuing the commands; however, the motor power is now not connected to the relays, so any relay closure has no effect on the tap changer motor. As the tap changer rotates, the holding switch is closed, as described in the preceding section, step 6. Again, this holding switch current is sensed by the circuit board, and the operations counter is appropriately incremented.

Tap changes will continue to occur as long as the RAISE/LOWER switch is closed and the limit switch is not opened.

SUPERVISORY CONTROL AND DATA AQUISITION (SCADA)

SCADA is a supervisory system used by some utilities for remote control of their system. SCADA may take on many forms: from the single retrieval of a few analog values (such as voltage, current, power factor, etc.) to remote control of the tap change (raise, lower, inhibit), to complete remote control which allows everything to be performed remotely that could be performed at the regulator front panel. Complete remote control can only be accomplished through a digital communications link with the CL-4C Control.

This section applies to regulator SCADA applications that have seen increased use on distribution systems. Cooper Power Systems has prepared a connection scheme to accommodate various functions while at the same time protecting the equipment. This scheme accommodates the following functions:

1. Remotely raise and lower the tap changer
2. Remotely block automatic operation
3. Remotely apply voltage reduction

The basic requirement of the scheme is the use of the current relay package. The purpose of the current relay package is to prevent misapplication of any SCADA system, and to work with the holding switch to make sure a tap change is completed once it is started. The scheme uses a current relay to sense when the holding switch is closed. Once the holding switch is closed, the current relay contacts open and prevent any further power from being applied to the motor except through the holding switch. When the holding switch opens, the current relay contacts close, returning control of the tap changer to one of the operational methods of control: AUTO, MANUAL, or SCADA.

Figure 2-7 shows the basic scheme and the function of the current relay. This general scheme applies to all Cooper Power Systems CL regulator controls, but the wiring changes necessary to achieve the scheme differ with the different controls. The blocking (motor inhibiting) contact, shown in Figure 2-8 inhibits automatic operation of the regulator when the SCADA scheme is in operation.

VOLTAGE REDUCTION

The use of voltage reduction is common with SCADA schemes. Figure 2-9, shows a typical voltage reduction method. The input voltage to the control is applied between V(in) and common. The output voltage V(out) to common is applied to the sensing circuit. If relay K is energized, V(out) is greater than V(in) and when this increased voltage is applied, he sensing circuit causes the control to lower the voltage by the amount of increase. Various levels of voltage reduction may be selected, depending upon the number and value of each tap on the auto-transformer. The total range is usually 0 to 10%.

NOTE: This discussion assumes that the Cooper Power Systems voltage reduction accessory is not being used, and SCADA equipment is being connected directly to the bare CL-2A Control.

Refer to Figure 2-9 for proper connections. This method of voltage reduction is not recommended if a metering device such as the Cooper Power System's Meter-Pac is used.

RETROFITTING A CL-2A CONTROL TO PREVIOUS REGULATOR DESIGNS

Most Cooper Power Systems VR-32 voltage regulators produced since 1957 can be upgraded to work with the CL-2A control. This does not include simplified regulators (SR-32 or Auto-Boosters®). This does include the line material control (1957-1963) in the RS13Y series, the Kyle control (1963-69) in the RS83Y series, the Canonsburg control (1969-77) in the TAB142045 or B843449 series and the CL-1 control (1977-82).

Earlier pole-star types, built in Canonsburg, cannot be retrofitted using these instructions. The following applies to pre-CL-1 design regulators:

A complete CL-2A control **(part code #6070)** must be retrofit to the older regulator. This includes the cabinet, back panel and front panel. The original control cable should be reused where possible to simplify rewiring. If this is impossible, the factory should be contacted for additional instructions. Note that all control accessories can be utilized with the retrofit CL-2A, providing increased versatility of the regulator.

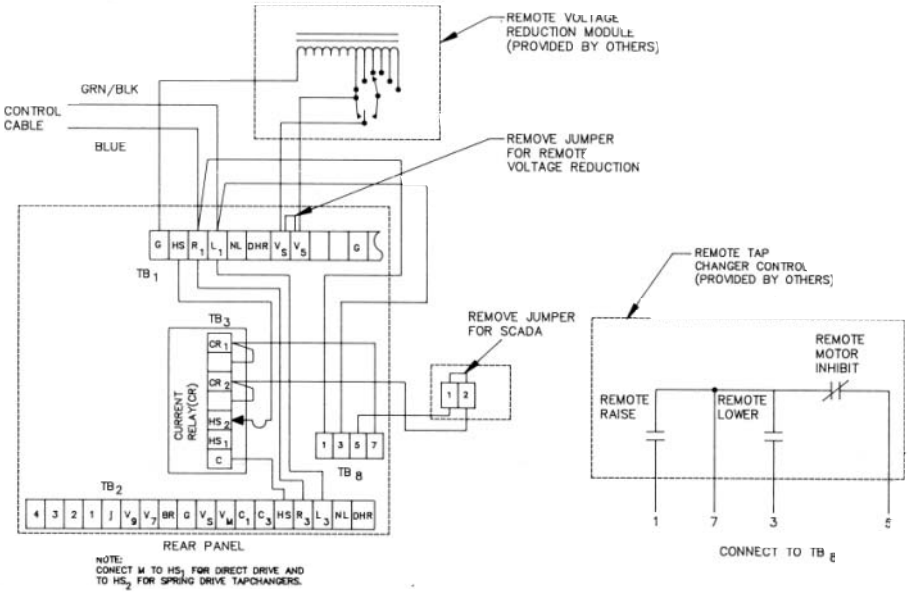

Figure 2-7.
SCADA connections to CL-2A control.

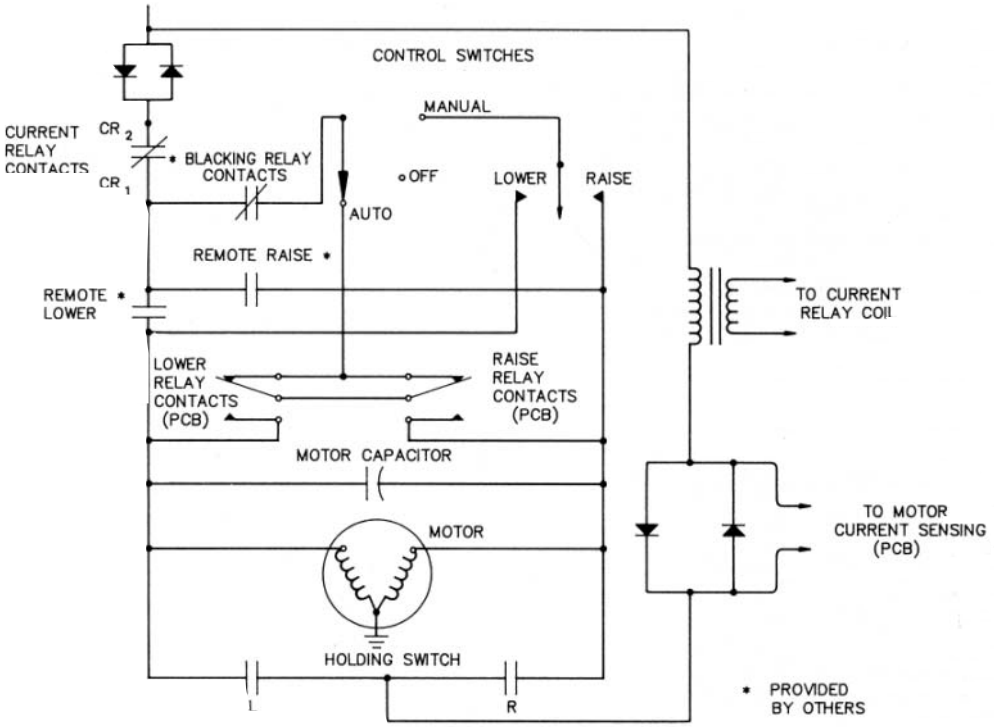

Figure 2-8.
SCADA connections to basic scheme.

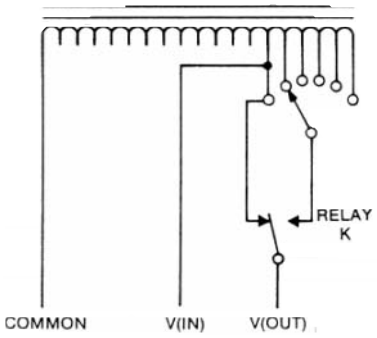

Figure 2-9.
Typical user provided voltage reduction module.

1. Count the number of wires in the existing control cable to determine which wiring schematic applies to your regulator. All VR-32 regulators produced in this period had either 8, 9, or 10 conductors in the control cable (Figure 2-10, 2-11, or 2-12).
2. Determine if the regulator is to be used at rated voltage, or at a lower tapped voltage. This can be found by referring to Table 2-1 on page 2-7. Using the regulator voltage rating, found on the nameplate, find the voltage rating in column 1 of Table 2-1. Then determine the nominal single-phase voltage at which the regulator will be used. Typical system voltages are found in column 2. If the exact system voltage is not listed, find the closest one. Then determine what internal tap is listed in column 3 for that system voltage.
   A. If it is “E1/P1” then the standard, current design CL2A control will work. order standard **part code #6070** and install as indicated.
   B. If it is either “E2/P2 or E3/P3” then a modified CL-2A must be used. This modification includes a special ratio correction transformer on the back panel. Call factory for order information.
3. Note that the tap changer terminal board (TCB) wiring is shown, but no modifications are required here. The disconnect plug in the existing control cable will still be operative. The 10 conductor cable schematic required that one voltage lead the white/black wire from V_2, be cut and insulated. It could also be disconnected at V_2 terminal on TCB located on the tap changer.
4. Tighten the waterproof lock-nut on cabinet top to the cable and cabinet.
5. Perform the operational check as described on page 2-2 to ensure correct operation.

The following applies to CL-1 design regulators only:

1. Unless there is a need to replace the back panel or cabinet due to physical damage, the upgrade to CL-2A can be accomplished by replacing the front panel **(part code** #6030) only. This is done following the instructions for CL-2A front panel removal and replacement found on page 1-7. Note that there are two (2) voltage end C.T. disconnect switches on someCL-1 controls rather than one (1). All switches must be operated as instructed to disconnect the voltage and short the C.T. if the regulator is energized at time of panel replacement. Note and follow the instructions located on the decal on existing CL-1 back panels for proper operation of the switches.
2. Perform the operational check as described on page 2-2 to ensure correct operation.

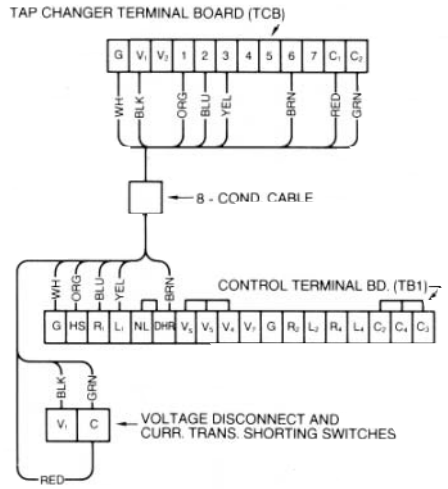

Figure 2-10.
8 - Conductor cable.

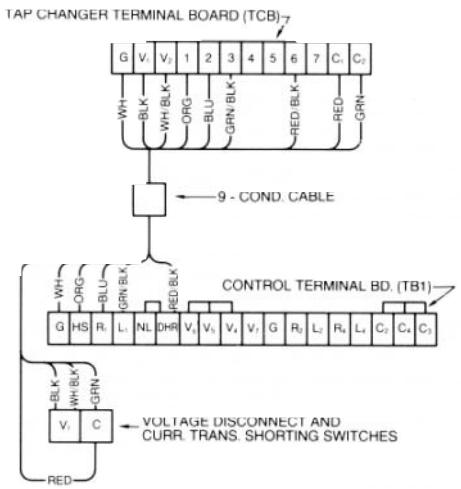

Figure 2-11.
9 - Conductor cable.

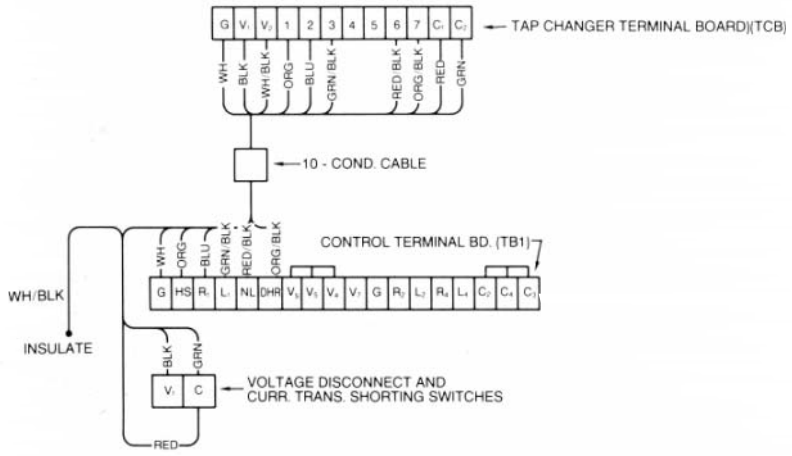

Figure 2-12.
10 - Conductor cable.

VR-32 REGULATOR TAP CHANGER • Section 3

TAP CHANGER OPERATION

Spring- and Direct-drive Tap Changers

Regulators for low-current applications employ stored-energy spring-drive tap changers. Commonly, they are used on ratings 219 amps and below. The tap changer for a specific rating is shown on the rating plate. Figures 3-1 (95 BIL) and 3-2 (150 BIL) illustrate typical spring-drive mechanisms. on regulators manufactured January 1976 and later, the model number is stamped on the drive frame. Common models are either 859 or 928 (Figure 3-1) and 170 (Figure 3-2), followed by a suffix letter.

Voltage regulators used in medium-and high-current applications employ direct-motor-driven tap changers. They have the motor and gear train moving the contacts through a geneva gear, pinion and scroll cam. Direct-drive tap changers are commonly applied above 219 amps. Both the mid-current, Model 770B (Figure 3-3) and high-current, Model 660C (Figure 3-4) are rated 150 BIL. See Table 3-1 for application chart of tap changer models.

MOTOR

The motor for the spring-drive tap changer is a capacitor-run, reversing gear-motor suitable for operation at 120 volts ac, singlephase, at 50/60-Hz. An integral braking mechanism controls motor coast.

The motor for the direct-drive tap changers is a capacitor-start, capacitor-run, high-torque, reversing, gear-motor rated 120 volts ac, single-phase, at 50/60-Hz, with an internal magnetically disengaging brake mechanism.

All components are compatible with hot transformer oil and the windings are oil cooled. The motors will carry locked-rotor current for at least 3000 hours.

REVERSING SWITCH

The reversing switch function changes the polarity of the tapped winding. When the spring-drive tap changer is in the neutral position, the reversing switch is open. When the direct-drive tap changer is in the neutral position, the reversing movable contact is in contact with the lower reversing stationary contact (VL).

The load current on all types is carried by the source bushing, the reactor, slip rings, main movable contacts, neutral stationary contact and the load bushing.

The reversing switch motion on the spring-drive tap changer occurs as the main movable contacts enter or leave the neutral position. A pin in the contact drive sprocket assembly engages a slot in the reversing segment when the main switch is in the neutral position. The first tap step in either direction rotates the segment and the reversing switch engages the appropriate reversing stationary.

The drive sprocket pin and reversing segment provide a mechanical stop located approximately 320 degrees on either side of neutral. When the pin engages the end of the segment, the spring-drive mechanism will be loaded and the segment is locked to prevent any further motion in that direction.

The reversing switch motion on the direct-drive tap changers occurs as the main movable contact moves from neutral to the first raise position. On the Model 770B tap changer, a roller on the back side of the rear roller plate engages a slot in the reversing segment on the reversing insulating arm. On Model 660C tap changer, a pinion, mounted on the same shaft as the rear roller plate, engages a slot in the reversing segment on the reversing insulating arm. As the rear roller plate rotates, the reversing movable contacts are driven from the VL reversing stationary contact to the VR contact.

Table 3-1
Tap Changer Model Application Chart.

Rated Volts (kV)	Load Current (Amp)	Rated kVA	Catalog Number	Tap Changer
2.5	100	25	RSAA025025AA	928D
	200	50	RSAA025050AA	928D
60	300	75	RSAA025075AA	770B
kV	400	100	RSAA025100AA	770B
	500	125	RSAA025125AA	660C
	668	167	RSAA025167AA	660C
	1000	250 S	RSAA025250AA	770B
	1332	333 S	RSAA025333AA	770B
	1665	416.3 S	RSAA025416AA	770B
5.0	50	25	RSAA050025AA	928D
	100	50	RSAA050050AA	928D
75	200	100	RSAA050100AA	928D
kV	250	125	RSAA050125AA	770B
BIL	334	167	RSAA050167AA	770B
	500	250 S	RSAA050250AA	660C
	668	333 S	RSAA050333AA	660C
	833	416.3 S	RSAA050416AA	660C
7.62	50	38.1	RSAA076038AA	928D
	75	57.2	RSAA076057AA	928D
95	100	76.2	RSAA076076AA	928D
kV	150	114.3	RSAA076114AA	928D
BIL	219	167	RSAA076167AA	928D
	328	250 S	RSAA076250AA	770B
	438	333 S	RSAA076333AA	660C
	548	416.3 S	RSAA076416AA	660C
	656	500 S	RSAA076500AA	660C
	875	667 S	RSAA076667AA	660C
	1093	833 S	RSAA076833AA	660C
13.8	50	69	RSAA138069AA	170C
	100	138	RSAA138138AA	170C
	150	207	RSAA138207AA	170C
95	200	276 S	RSAA138276AA	170C
BIVL	300	414 S	RSAA138414AA	770B
	362	500 S	RSAA138500AA	660C
	400	552 S	RSAA138552AA	660C
	483	667 S	RSAA138667AA	660C
	604	833 S	RSAA138833AA	660C
14.4	5	72	RSAA144072AA	170C
	100	144	RSAA144144AA	170C
	200	288 S	RSAA144288AA	170C
	231	333 S	RSM144333AA	770B
150	289	416 S	RSAA144416AA	770B
BklVL	300	432 S	RSM144432AA	770B
	347	500 S	RSAA144500AA	660C
	400	576 S	RSAA144576M	660C
	463	667 S	RSAA144667AA	660C
	500	720 S	RSAA144720AA	660C
	578	833 S	RSAA144833AA	660C
19.92	25.1	50	RSM199050AA	170C
	50.2	100	RSAA199100AA	170C
	100.4	200 S	RSAA199200AA	170C
1k5v0	167	333 S	RSM199333AA	770B
BIL	200.8	400 S	RSAA199400AA	770B
	250	500 S	RSAA199500AA	770B
	335	667 S	RSAA199667AA	660C
	418	833 S	RSAA199833AA	660C

Note: An "S" following the kVA denotes station mount.
Spring-drive: 928D and 170C
Direct-drive: 770B and 660C

DRIVER MECHANISM - Spring-drive

Two steel extension springs are arranged in a triangular configuration to provide positive “spring-over-center” action to move the switch contacts. The mechanism is adjusted for smooth make and break contact action.

DRIVE MECHANISM - Direct-drive

The 770B and 660C tap changers employ drive mechanisms based upon the same design principle, and many components are interchangeable. The motor turns a geneva pinion three complete revolutions per tap change. The motion of the geneva pinion turns a six-tooth geneva gear, a main drive shaft, and a scroll cam 180 degrees per tap change. Each 180-degree movement of the scroll cam operates one of two roller plates and moves the corresponding main movable contacts 40 degrees. The combination of geneva gearing and scroll cam characteristics results in a threestep, wipe/transfer/wipe contact action.

Attached to the main (geneva gear) drive shaft is a planetary gear-type mechanical stop which prevents contact motion beyond the maximum raise and lower position.

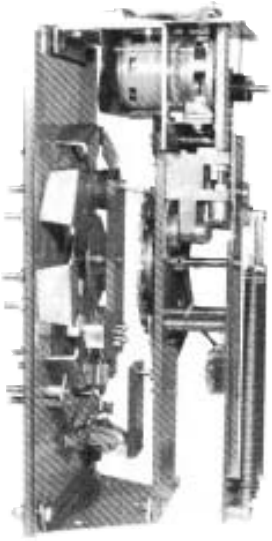

Figure 3-1
928D spring-drive tap changer.

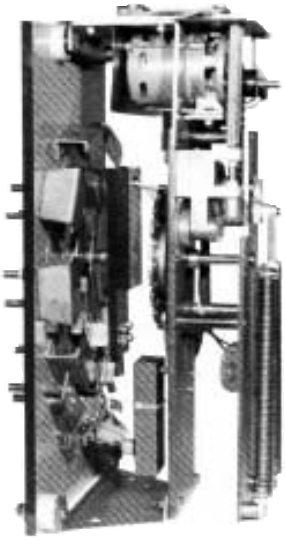

Figure 3-2
170C spring-drive tap changer.

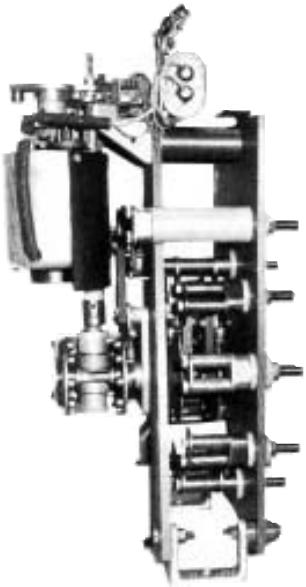

Figure 3-3
770B direct-drive tap changer.

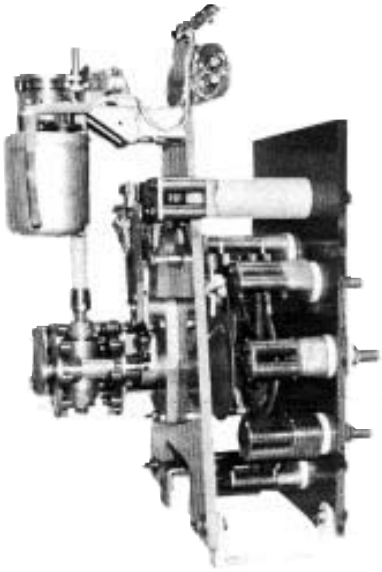

Figure 3-4
660C direct-drive tap changer.

CONTENTS

All movable and stationary contacts employ copper-tungsten or silver tips at points subjected to arcing duty. Contact points not exposed to arcing employ a combination of ETP copper and silver to provide a high conductivity current path. Movable contacts are split to make contact on both sides of mating parts and resist separation during high current surges. Contact pressure is maintained by steel leaf or compression springs. All contacts for current tap changer models can be retrofit to older models.

OPERATING SEQUENCE - Spring-drive

When the spring-drive switch is in the neutral position and the control calls for a tap change, the following events occur:

1. Motor brake releases and motor starts.
2. Motor holding switch closes, assuring that one tap change will be completed.
3. The up slope of sprocket cam engages a lip of the spool. This lifts the pin in the pin cam and frees it from the hole in the actuator.
4. A projection on the sprocket cam contacts a leg on the pin cam, and both turn.
5. Drive shaft, which is attached to the pin cam, begins to turn the crank arm and the springs begin to extend.
6. Pin comes free from the lip on the spool and a spring pushes it against the surface actuator.
7. Down slope of sprocket cam returns the spool to the start position.
8. Pin drops into the hole in the actuator 180 degrees from the start position.
9. At this point, the crank arm is at top dead center and the springs are fully loaded. Drive shaft and crank arm, sprocket cam, pin cam, and actuator are locked together and connected through the chain to the motor.
10. Motor drives all parts beyond top dead center.
11. Spring unloads, pulling pin cam and actuator through 18O degrees at high speed. Pins on the actuator cause the contact drive sprocket to index one tap position.
12. As the contact drive sprocket moves, it imparts motion to the reversing switch segment and main movable contacts. This action closes the reversing movable and reversing stationary contacts and drives the main movable contact onto the adjacent main stationary contact. Also, the neutral light switch opens.
13. Motor continues to turn the sprocket cam until the motor holding switch opens. The gear motor output shaft has completed one revolution.

Should more than one tap change be required, the foregoing sequence will be repeated {except reversing switch portion) until the control is satisfied or the limit switch in the position indicator is reached.

OPERATING SEQUENCE - Direct-drive

When the switch is in neutral and the control calls for a tap change in the raise direction, the following events occur:

1. Motor brake releases and motor starts.
2. Geneva pinion rotates counter-clockwise to engage the geneva gear.
3. Geneva pinion drives the geneva gear, main drive shaft, and scroll cam through 60 degrees and produces initial wipe action atthe front main movable contact and reversing movable contacts.
4. Motor holding switch closes, assuring that one tap change will be completed.
5. Geneva pinion completes first revolution and continues to rotate.
6. Geneva pinion drives the geneva gear through 60 degrees and the scroll cam and roller plates transfer the front main movable contacts from the neutral stationary contact N to the stationary contact No. 1. Simultaneously, the reversing movable contact is transferred from the reversing stationary contact (VL) to the stationary contact (VR).
7. Neutral light switch opens.
8. Geneva pinion completes second revolution and continues to rotate.
9. Geneva pinion drives the geneva gear, main drive shaft, and scroll cam through 60 degrees and produces final wipe action at the front main movable and reversing movable contacts.
10. Motor holding switch opens.
11. Motor brake engages.
12. Motor stops.

A tap change from No. 1 raise position to neutral will be accomplished as described, except the geneva pinion will rotate clockwise. The reversing movable contact will be transferred from the reversing stationary contact (VR) to the stationary contact (VL).

TROUBLE SHOOTING GUIDE • Section 4

COMPLETE REGULATOR IN SERVICE

WARNING: When trouble shooting energized equipment, caution should be taken to wear protective gear and to avoid personal contect with energized parts. Failure to do so may cause serious injury or death.

External Check

When service personnel arrive at what appears to be a malfunctioning regulator, it is advisable to examine the power connections first. For example, verify that the source lead is connected to the source bushing; that the load lead is connected to the load bushing; and that the source-load lead is connected to the sourceload bushing. Check other potential problems, such as an open ground connection.

Defining The Problem

Figures 1-17, page 1-16 can be used while diagnosing the problem.

After the external power connections have been checked, check the voltage-disconnect knife switch (V_1 and V_6 if present) and the current shorting knife switch (C) of the rear panel signal circuit in the control box. Close the voltage disconnects if open. open shorting switch, if closed.

Check for loose connections or burnt wiring.

Make sure ratio-correcting transformer RCT1 is on the correct tap for the regulated voltage shown on the nameplate on the control box door.

Remove the motor and panel fuses from the control and check for continuity across each fuse. Spares, if needed are included with the control.

NOTICE: Use only 350 volts ac, slow-blow ceramic fuses of the proper current rating. Failure to do so may cause unnecessary fuse operation or insufficient protection of the regulator and control.

If the above checks do not identify the problem, determine which of the following three categories best describes the malfunction, and follow the corresponding diagnostic steps:

THE REGULATOR WILL NOT OPERATE MANUALLY OR AUTOMATICALLY

Diagnosing trouble:

A. Set the CONTROL switch on RAISE.
B. Measure the voltage between terminals R_1 and G on terminal board TB1. The voltage reading should be approximately the set voltage setting.
C. Set the CONTROL switch on LOWER.
D. Measure the voltage between terminals L_1 and G on terminal board TB1. The voltage reading should be approximately the set voltage setting.
E. If correct voltage readings are obtained in steps B and D above, the trouble may be in the position indicator, junction box, or control cable. Refer to the junction box troubleshooting section on page 4-2.
G. If there is no voltage measurement in either step B or D, make a corresponding measurement (R_3 to G and L_3 to G) on lower terminal board TB2.
H. If the voltages measured in Step G are approximately the set voltage setting then the fault is likely a loose connection or a faulty terminal swage between TB1 and TB2.
I. If steps B, D, and G do not provide voltage readings, measure the voltage between VM and G on terminal board TB2. The reading should be approximately the set voltage setting.
J. If Step I measures correctly, the trouble could be an open motor fuse, power switch, or control switch of the control.
K. If Step I does not yield a voltage measurement check the voltage between PD_11 (V1) and ground (G) at the voltage disconnect knife switch.
   1. If approximately the set voltage setting is obtained, the V1 disconnect or the ratio correcting transformer (RCT1) of the rear panel signal circuit is probably faulty.
   2. If voltage is not obtained, the trouble is in the control cable junction box, or regulator tank. Refer to the junction box troubleshooting section on page 4-2. If the junction box checks are satisfactory, the trouble is in the regulator tank. See *S225-10-2* for the trouble shooting method.

THE REGULATOR WILL OPERATE MANUALLY BUT NOT AUTOMATICALLY

Diagnosing trouble:

A. Measure voltage from VS to G on lower terminal board TB2.
   1. A measurement of approximately the set voltage setting at VS to G indicates that the problem is in the control.
   2. If there is no voltage present at VS to G, the trouble is in the V1 disconnect or ratio-correcting transformer of the rear signal circuit.
B. If check A indicates that the trouble is in the control, refer to *Control Trouble Shooting,* below.

THE REGULATOR OPERATES MANUALLY BUT OPERATES INCORRECTLY WHEN SET ON AUTOMATIC

Diagnosing trouble:

Run the regulator to the neutral position with the control switch. Check for voltage between V_4 and G on TB1. This is the sensing circuit supply voltage from the output of RCT1 on the rear panel. If this voltage is more than 10% above or below the programmed voltage level setting of the control, then the source is beyond the range of the regulator. An absence of voltage would indicate a wiring problem such as an opening somewhere in the control power supply. If these checks are correct, then the malfunction is probably in the control. Refer to *Control Trouble Shooting,* below.

Junction Box Trouble Shooting

This section is used if the regulator will not operate manually. (Problem was isolated to junction box or regulator tank after checking-out control, on page 4-1).

The junction box is composed of a terminal board, the position indicator, and the control box interconnections. Refer to Figure 4-1, when the following steps are made:

1. Remove the regulator from service, as stated on page 1-8.
2. Ground the three high-voltage bushings.
3. Open V_1 disconnect switch on rear panel (and V_6 if present) of control cabinet.
4. Remove junction box lid.
5. Check the wiring on the junction box terminal board for loose connections, burnt wiring, or bad swage joints.
6. A. Set the POWER switch to EXTERNAL.
   B. Apply a 60/50 Hz, 120-volt ac nominal variable source to the EXTERNAL SOURCE terminals.
   C. Set the CONTROL switch on RAISE.
   D. Lift the RAISE/LOWER switch.

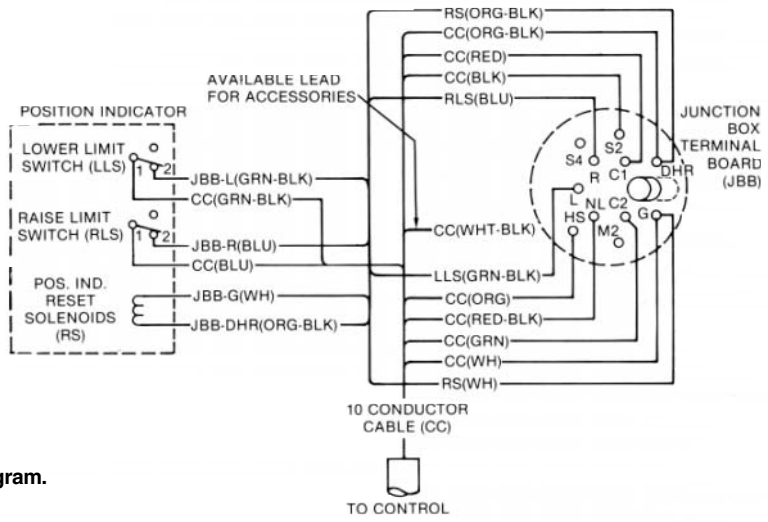

Figure 4-1.
Junction box wiring diagram.

E. Set the CONTROL switch on LOWER.
F. Measure the voltage between terminals L and G on terminal board. The voltage reading should be approximately 120 volts act
G. If correct voltage readings are obtained in steps B and D above, the trouble is in the regulator tank. Refer to troubleshooting section of *S225-10-2.*
H. If there is no voltage measurement in either step B or D, the problem is in the limit switches inside the position indicator or the control cable.

7. Check the continuity of the raise and lower limit switches. The switches should be closed on all tap changer positions except for the set limit switch positions of the indicator dial. To check the continuity:
   A. Remove position indicator green-black lead from splice terminals.
   B. Place the meter lead on the disconnected lead and the other lead on terminal L of the junction box terminal board. Then check continuity.
   C. If a continuity problem occurs, refer to *Position Indicator Replacement,* on page 4-3.
   D. Remove the position indicator blue lead from the splice terminal.
   E. Place the meter lead on the disconnected lead, and the other lead on terminal R of the junction box terminal board. Check continuity.
   F. If a continuity problem occurs, refer *to Position Indicator Replacement,* on page 4-3.
8. Check the reset solenoid of position indicator. Push the DRAG HAND RESET switch while measuring the voltage between DHR and G on the terminal board. The voltage reading should be approximately 120 volts ac and DRAG HANDS will reset.
   A. If 120 volts is read and drag hand will not reset, refer to *Position Indicator Replacement* on page 4-3.
   B. If 120 volts is not read; refer to *Control Trouble Shooting,* on page 4-1.

Position Indicator Replacement

The following instructions apply only to the junction box mounted position indicator construction that was initiated in April, 1980.

To replace a defective position indicator requires removing the unit from service as outlined in **REMOVAL FRoM SERVICE** on page 1-8.

1. A defect in the position indicator may have caused loss of synchronization between the tap changer and the indicator hand. Verify that the tap changer is in neutral via the neutral light of the control and visual inspection of the tap changer. If the position indicator does not also show neutral, refer to instructions in *S225-10-2, Spring-and-Direct Drive Tap Changers.*
2. Remove the junction box cover.
3. Note the location of the indicating hand for future alignment and disengage the flexible shaft from the position indicator shaft.
   A. In early 1986 this joint was changed to a set screw type coupling.
   B. Older equipment employed a cotter pin coupling.
4. Disconnect the four leads from the junction box terminal board and open the two splice terminals to the control cable.
5. Remove the three bolts holding the indicator to the junction box and slide the indicator free.
6. Remove the gasket from the groove on the back of the indicator body.
7. Clean the gasket surface of the junction box and the gasket and groove on the new indicator.
8. Place the gasket in the groove and insert the leads through the junction box wall, align the holes and install the three bolts finger tight.
9. Wrench-tighten the bolts to evenly compress the gasket and bring the indicator body tight against the junction box.
10. Connect the six leads to the terminal board and control cable leads per Figure 4-1 and secure all connections.
11. Turn the indicator drive shaft to place the hand at the previously noted position.
12. Slide the flexible shaft coupling over the indicator shaft and secure the joint.
13. Position the wire to prevent snagging on the coupling or cotter pin. Secure with the wraps.

14. Connect a 120-volt ac external power supply to the control.
15. Run the tap changer manually to verify alignment of the position indicator hand and the neutral light. If correction is required:
    A. Stop the tap changer with the neutral light on.
    B. Disconnect the flexible shaft from the back of the indicator.
    C. Turn the indicator shaft to center the hand at zero (neutral).
    D. Reconnect the flexible shaft.
16. Run the tap changer to both raise and lower extremes to check operation of the limit switches and coordination with holding switch.
17. Run between position nine raise and nine lower to check neutral light and position indicator alignment. Run several cycles.
18. Should the alignment of the position indicator hand and the neutral light become unstable during this check, an internal inspection of the tap changer and position indicator shaft is required. See S225-10-2 for instructions.
19. Return the tap changer to the neutral position and disconnect the power supply.
20. Replace the junction box cover.
21. The unit may now be placed into service as outlined on page 1-5.

CAUTION: It must be verified that BOTH the neutral light AND the position indicator hand indicate NEUTRAL when the tap changer is physically in the neutral position. Lack of the synchronization will cause an indefinite indication of NEUTRAL. Without both indications of neutral, bypassing of the regulator or at a later time will not be possible, and the line must be de-energized to avoid shorting part of the series winding.

FRONT PANEL TROUBLE SHOOTING

At this point, the problem has been determined to be in the control, so the front panel should be taken out of the control cabinet and taken to a service bench for trouble shooting. Figure 2-3 and 4-2 can be used to aid the trouble shooting process. Except for the line drop compensation circuit, the panel components are checked by using an external voltage of approximately 120 volts ac, 50/60 Hz, applied to the external source terminals of the control.

1. Check the motor and panel fuses to ensure they have not blown.
2. Place the power switch on the EXTERNAL position.
3. On the power switch, measure the voltage from terminal 2 to ground and terminal 5 to ground. These measurements should be equal to the external voltage applied. If not, the power switch is defective.
4. Set the LDC CONTROL switch on the OFF position and the VOLTAGE SETTING fine adjustment to 0. With an ac voltmeter having at least 1OOO ohms/volt connected to the INPUT (terminals 10 and 11) of the circuit board, perform the following measurements at each setting indicated:

Coarse Voltage Setting	Measure Voltage at Input Terminals
105	66.9
110	63.9
115	61.1
120	58.6
125	56.3
10	54.1

Since this is not a calibration type measurement, there may be some variation in these measurements depending upon how close to 120.0 volts the applied voltage actually is. Expect less than 3% variation. The objective is to look for sudden discontinities in the voltage measurements. If the measurements are dramatically different from those above, or if discontinuities are observed, suspect either the coarse VOLTAGE SETTING (VSC1) switch or the INPUT POTENTIAL TRANSFORMER (IPT). The problem can be isolated by checking the components individually.

5. With the coarse VOLTAGE SETTING switch on the 120-volt position, vary the fine VOLTAGE SETTING rheostat from zero (0) to 5.0 volts. The measured voltage (at the INPUT terminals) should drop smoothly **about** 2.5 volts. If no variation occurs, or if discontinuities are observed, suspect either the fine VOLTAGE SETTING rheostat (VSC2) or transformer (IPT).

   The front panel circuits for the DRAG-HAND RESET solenoid (DHR) and NEUTRAL LIGHT (NL) can be checked as follows:

   a. Connect the ac voltmeter from G to DHR on the fanning strip TB2.
   b. Depress the DRAG-HAND RESET toggle switch and observe approximately 120-volts on the voltmeter. If no voltage is measured, the switch is probably defective.
   c. Connect the AC voltmeter from G to NL on fanning stripTB2. d. Activate the NEUTRAL LAMP TEST toggle switch and observe approximately 120 volts on the voltmeter **and** note that the neutral light should come on. If no voltage is measured and the light **does not** come on, the switch is probably defective. If voltage **is** measured but the light does **not** come on, the lamp or lamp holder is defective.

The line drop compensation components should be checked next, but only if there is strong suspicion of a problem. In reality, field failures of these components is extremely rare. To perform this analysis, the printed circuit board must first be disconnected by dropping the fanning strip away from the circuit board terminal strip. This procedure requires a current source of .200 amps which will periodically be readjusted during the test as a result of the changing loading conditions. The procedure follows:

1. Switch the POWER switch to EXTERNAL.
2. Connect a jumper from the EXTERNAL SOURCE terminal to ground.
3. Apply and maintain a test current source of 0.2 amp from C1 to C3 on the fanning strip for terminal strip TB2.
4. Connect a 1000 ohms/volt ac voltmeter to the terminals marked INPUT on the fanning strip for the printed circuit board.
5. Switch the LDC control switch to (+X+R).
6. Set the coarse and fine REACTANCE controls (X1 and X2) to zero (0).
7. Vary the RESISTANCE control (R1) and read the voltage at the major points across the dial. The measured voltage at these points should be half the RESISTANCE control dial setting ±3.5%. Erratic behavior indicates a defective resistance control. A serious deviation from expected readings at all levels indicates a defective R2. R2 is selected to yield a resistance of 270 ohms ±3.5% from terminal 1 to terminal 3 of the resistance control (R1).
8. Set the RESISTANCE. control at 24 volts on the panel and switch the LDC control from the (+X+R) setting through the other two positions (-X+R and +X-R). The voltage reading should be constant. Any change indicates a probable defective LDC control switch.
9. Check the coarse REACTANCE control. A. Set the RESISTANCE control to zero (0).

B. Switch the LDC control to (+X+R) and operate the coarse REACTANCE control through all positions.

The voltage reading in each switch position should be half the dial setting. This reading cannot be taken as precise, unless a current source, virtually free of high-order harmonics, is used. This is not normally available in a typical test set up. The unit is calibrated at the factory and any trouble should be indicated by a significant deviation from the values provided in this trouble shooting outline. In this case, a deviation indicates a detective REACTANCE switch (X1) or reactor (X3).

10. Set the coarse REACTANCE control at 10 volts. Rotate the fine REACTANCE control through all positions. The voltage reading at each position should be half the sum of 10 plus the respective fine REACTANCE control setting. A deviation indicates a defective fine REACTANCE switch (X2) or reactor (X3).
11. Set the coarse REACTANCE control at 10 volts and the fine REACTANCE control at zero (0), and then switch the LDC CONTROL through (-X+R) and (+X-R). The reading should remain constant. A deviation indicates a defective LDC CONTROL switch.

If the results of all the previous linedrop compensation tests deviate significantly from the values provided in this outline, the LDC CONTROL switch or the auxiliary current transformer (ACT) are the most likely problem areas.

If all the above checks are satisfactory, the trouble is likely to be in the printed circuit board. Refer to the Circuit Board Trouble Shooting procedures which follow.

CIRCUIT BOARD TROUBLE SHOOTING

Recalibration

This precise check should be made on a service bench with the control removed from the control box. (See instructions for control removal and replacement on page 1-7.)

CAUTION: Use only a high impedance (3000 ohms minimum) RMS meter for measurements.

VOLTAGE LEVEL SETTING AND BANDWIDTH

1. Switch the POWER switch to EXTERNAL.
2. Switch the LINE-DROP COMPENSATION control switch to OFF.
3. Set the VOLTAGE SETTING control to 120 volts.
4. Set the BANDWIDTH control to 2 volts.
5. Connect an accurate, true-RMS-responding voltmeter of at least 3000 ohms impedance to the VOLTMETER terminals.
6. Connect a variable external 50/60-Hz voltage source with less than 5% harmonic content to the EXTERNAL SOURCE terminals.
7. Close dipswitch position 3.
8. Raise the applied voltage approximately 120 volts and adjust until the band indicators stop flashing, indicating mid-band.
9. The voltage applied should be 120 ±0.25 volts act If not, set the applied voltage to **exactly** 120.0 volts ac and adjust R10 (voltage level calibrator) on the printed circuit board until both indicators are off.
10. Slowly vary the input voltage up and down, noting the points that the HIGH and LOW visual indicators switch on. These points should be symmetrical, and should be one volt above and one volt below the 12O-volt nominal setting with an accuracy of .3 volt.

If this is not true, proceed with the trouble shooting section.

WARNING: Care must be exercised if the printed circuit board is to be removed or tested while the control is energized. Shock hazard is present.

It is convenient to troubleshooting printed circuit board circuitry while it is mounted in the control; however, the board can also be checked after it is removed from the control. The board should be serviced in a properly equipped service facility and not in the field. In this section use Figure 4-3 to assist in trouble shooting.

The use of in-circuit component testers should be avoided since their use can cause damage to the microcomputer IC1. All soldering and unsoldering must be done with an isolated soldering iron. Good anti-static procedures must be followed during component replacement.

Replacement of the microcomputer is to be avoided. Return the printed circuit board to an approved service facility for repair.

PRINTED CIRCUIT BOARD LEFT IN THE CONTROL

1. Set the LINE-DROP COMPENSATION control to OFF.
2. Set the POWER switch to EXTERNAL.
3. Set the VOLTAGE SETTING to 120 volts.
4. Set the BANDWIDTH to 2 volts.
5. Set the TIME-DELAY to 20 seconds.
6. Apply a 50/60-Hz, 120-volt ac nominal variable source to the EXTERNAL SOURCE terminals, making sure that the source ground is connected to the panel ground (white post).

PRINTED CIRCUIT BOARD REMOVED FROM THE CONTROL

1. Set the BANDWIDTH control two positions clockwise from its extreme counterclockwise position.
2. Set the TIME-DELAY control two positions clockwise from its extreme counterclockwise positions.
3. Connect a 120-volt ac supply to V3 terminal (13) and G (ground) terminal (12). observe ground.
4. Connect one end of a 390-ohm ±2% resistor to either INPUT terminal (10 or 11) on the printed circuit board.
5. Connect the other end of the 390-ohm resistor and the other printed circuit board INPUT terminal to a variable isolated 60-volt ac, 50/60 Hz supply.

The input voltage and equivalent bandwidth on the printed circuit board are related to 600-volt ac and are, therefore, one-half the 120-volt ac level applied to the control.

Note on the lower left-hand side of the circuit board a 16 pin connector. Each pin of this connector corresponds to a test point as shown on the schematic diagram in figure 4-3. The pin designations are TP_O, TP_1, $TP_{.}$, --- TP_{15}, labeled from top to bottom. Also, immediately above the connector is a swaged terminal which is connected to TP_O. This provides an alternate point of attachment when making circuit board measurements.

CHECK No. 1 - POWER SUPPLY AND REFERENCE

The following measurements can be made with a multimeter with an accuracy of 2%, having at least 5000 ohms/volt dc and 1000ohms/volt act The inputvoltage will either be held in band or varied from band edge to band edge.

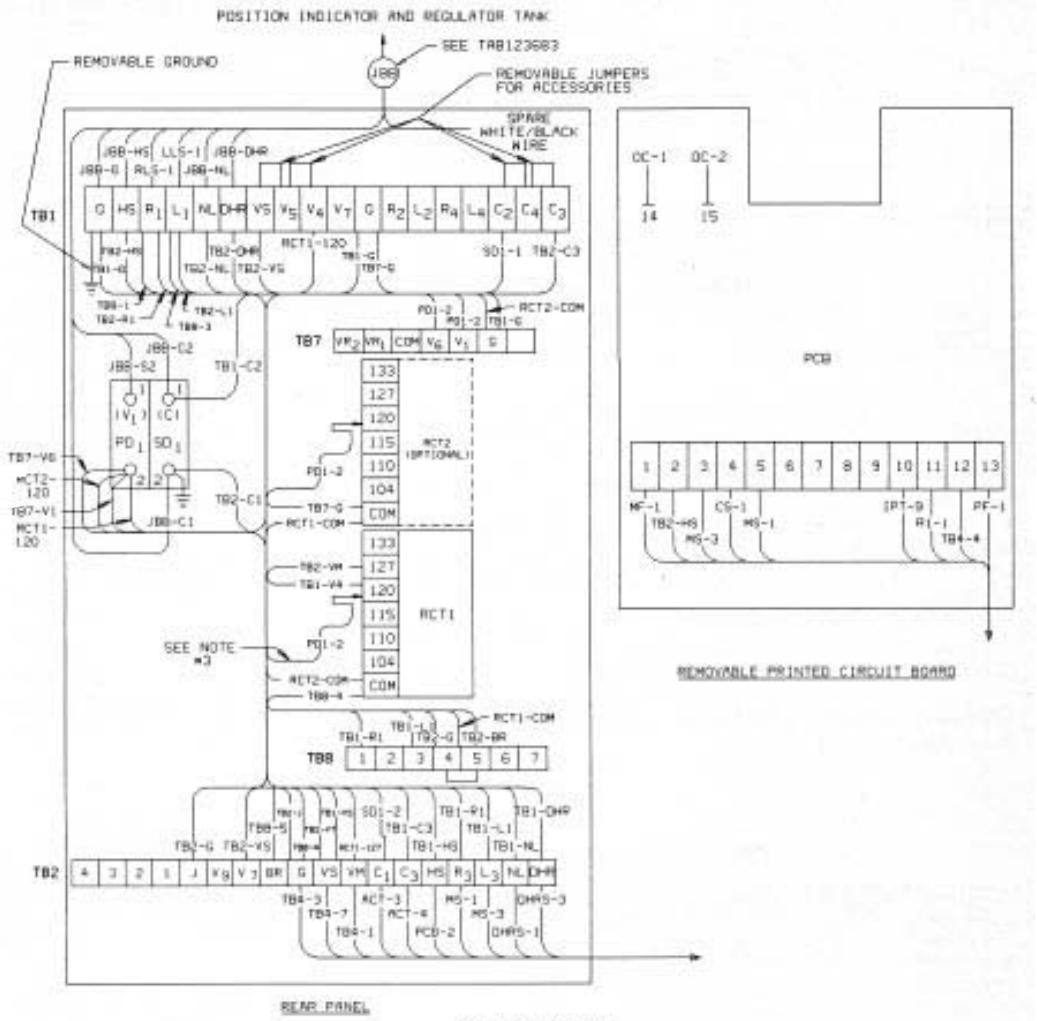

COLOR CODING CHART

TB1-G	TO	JBB-G	WHITE
PD1-1	TO	JBB-S2	BLACK
SD1-2	TO	JBB-C1	RED
SD1-1	TO	JBB-C2	GREEN
TB1-HS	TO	JBB-HS	ORANGE
TB1-RL	TO	RLS-1	BLUE
TB1-LL	TO	LLS-1	GREEN/BLACK
TB1-NL	TO	JBB-NL	RED/BLACK
TB1-DHR	TO	JBB-DHR	ORANGE/BLACK
TB1-R5	TO	TB2-H5	ORANGE
TB1-R3	TO	TB2-R3	BLUE
TB1-RL	TO	TB4-1	BLUE
TB1-L1	TO	TB4-3	WHITE/GREEN
TB1-L1	TO	TB2-L3	WHITE/GREEN
TB1-NL	TO	TB2-NL	WHITE/RED
TB1-DHR	TO	TB2-DHR	WHITE/ORANGE
TB1-G	TO	TB1-G	WHITE
TB1-G	TO	TB7-G	WHITE
TB7-G	TO	RCT2-COM	WHITE
RCT2-COM	TO	RCT1-COM	WHITE
RCT1-COM	TO	TB8-4	WHITE
TB8-4	TO	TB2-G	WHITE
TB2-G	TO	TB2-J	WHITE
TB1-V4	TO	RCT1-120	BLACK
TB1-V5	TO	TB2-V5	BLACK
TB1-C2	TO	SD1-1	VIOLET
TB1-C3	TO	TB2-C3	GREEN
RCT1-120	TO	PD1-2	BLACK
TB7-V1	TO	PD1-2	BLACK
TB7-V6	TO	PD1-2	WHITE/BROWN
RCT2-120	TO	PD1-2	WHITE/BROWN
TB8-5	TO	TB2-BR	WHITE/BLUE
TB2-V5	TO	TB2-V7	WHITE/BROWN
TB2-V4	TO	RCT1-120	WHITE/BLACK
TB2-C1	TO	SD1-2	RED
TB2-B	TO	TB4-3	WHITE
TB2-V3	TO	TB4-7	BLACK
TB2-V4	TO	TB4-1	WHITE/BLACK
TB2-C1	TO	RCT-3	RED
TB2-C3	TO	RCT-4	GREEN
TB2-H5	TO	PCB-2	ORANGE
TB2-R3	TO	MS-1	BLUE
TB2-L3	TO	MS-3	WHITE/GREEN
TB2-NL	TO	DHRS-1	WHITE/RED
TB2-DHR	TO	DHRS-3	WHITE/ORANGE
PCB-1	TO	MF-1	WHITE/BLACK
PCB-3	TO	MS-3	WHITE/GREEN
PCB-4	TO	CS-1	WHITE/BLUE
PCB-5	TO	MS-1	BLUE
PCB-10	TO	IPT-8	RED
PCB-11	TO	RI-1	RED
PCB-12	TO	TB4-4	WHITE
PCB-13	TO	PF-1	BLACK
PCB-14	TO	OC-1	BLACK
PCB-15	TO	OC-2	BLACK
RI-1	TO	LDCCS-2	BLUE
RI-2	TO	X2-2	GREEN
RI-3	TO	X3-4	GREEN
RI-4	TO	X3-3	BLUE
RI-5	TO	X3-2	VIOLET
RI-6	TO	X3-1	WHITE
R2-1	TO	LDCCS-6	BROWN
R2-2	TO	X3-5	BLACK
R2-3	TO	X3-6	BROWN
R2-4	TO	X3-7	RED
R2-5	TO	X3-8	ORANGE
R2-6	TO	X3-9	YELLOW
R3-11	TO	IPT-10	RED/WHITE
LDCCS-3	TO	RCT-1	YELLOW
LDCCS-4	TO	RCT-2	RED
LDCCS-5	TO	RL-3	WHITE/BLUE
LDCCS-1	TO	RL-2	WHITE/BROWN
EST-1	TO	PS-3	BLACK
EST-2	TO	TB4-8	WHITE
EST-2	TO	VTT-2	WHITE
NL-1	TO	VTT-2	WHITE
RTT-1	TO	PF-1	BLACK
RI-3	TO	X3-10	WHITE/BLACK
DHRS-1	TO	NL-2	WHITE/RED
DHRS-2	TO	MF-1	WHITE/BLACK
PS-1	TO	TB4-8	BLACK
PS-2	TO	MF-2	BLACK
PS-5	TO	MF-2	WHITE/BLACK
PS-6	TO	TB4-2	WHITE/BLACK
RSC1-1	TO	RSC2-3	BLUE
RSC1-2	TO	IPT-3	BROWN
RSC1-3	TO	IPT-4	ORANGE
RSC1-4	TO	IPT-5	YELLOW
RSC1-5	TO	IPT-6	GREEN
RSC1-6	TO	IPT-7	VIOLET
RSC1-7	TO	IPT-8	WHITE
RSC2-1	TO	IPT-2	BLUE
RSC2-2	TO	PF-1	BLACK
RSC2-3	TO	IPT-1	GRAY
IPT-11	TO	TB4-8	WHITE
MS-2	TO	CS-3	WHITE/PURPLE
CS-2	TO	TB8-1	WHITE/BLACK
TB4-9	TO	MF-1	WHITE/BLACK
TB4-10	TO	TB9-2	BLACK
TB4-5	TO	GRD	WHITE

Figure 4-2.
Physical wiring.

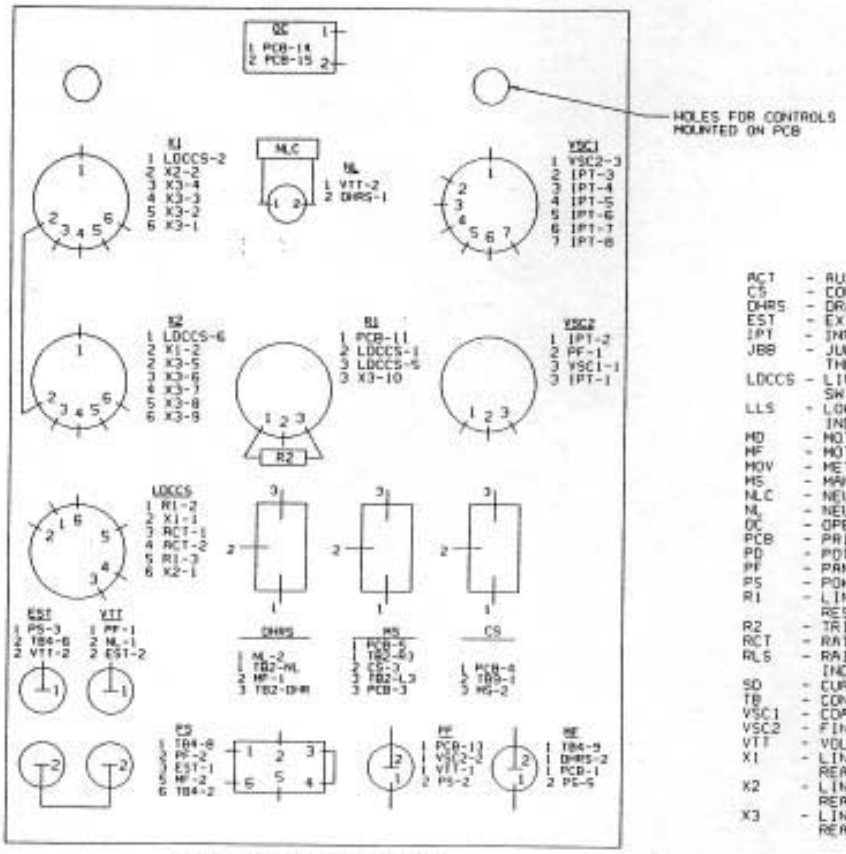

ACT	- AUXILIARY CURRENT TRANSFORMER
CS	- CONTROL SWITCH
DHRS	- DRAG HAND RESET SWITCH
EST	- EXTERNAL SOURCE TERMINALS
IPT	- INPUT POTENTIAL TRANSFORMER
JBB	- JUNCTION BOX TERMINAL BOARD ON THE COVER
LDCCS	- LINE DROP COMPENSATION CONTROL SWITCH
LLS	- LOWER LIMIT SWITCH (POSITION INDICATOR)
MD	- MOTOR DIODES
MF	- MOTOR FUSE
MOV	- METAL OXIDE VARISTOR
MS	- MANUAL SWITCH
NLC	- NEUTRAL LIGHT CAPACITOR
NL	- NEUTRAL LIGHT
OC	- OPERATIONS COUNTER
PCB	- PRINTED CIRCUIT BOARD
PD	- POTENTIAL OPENING DEVICE
PF	- PANEL FUSE
PS	- POWER SWITCH
R1	- LINE DROP COMPENSATING RESISTANCE SETTING
R2	- TRIM RESISTOR
RCT	- RATIO CORRECTION TRANSFORMER
RLS	- RAISE LIMIT SWITCH (POSITION INDICATOR)
SD	- CURRENT SHORTING DEVICE
TB	- CONTROL TERMINAL BOARD
VSC1	- COARSE VOLTAGE SETTING CONTROL
VSC2	- FINE VOLTAGE SETTING CONTROL
VTT	- VOLTAGE TEST TERMINALS
X1	- LINE DROP COMPENSATING REACTANCE COARSE SETTING
X2	- LINE DROP COMPENSATING REACTANCE FINE SETTING
X3	- LINE DROP COMPENSATION REACTOR

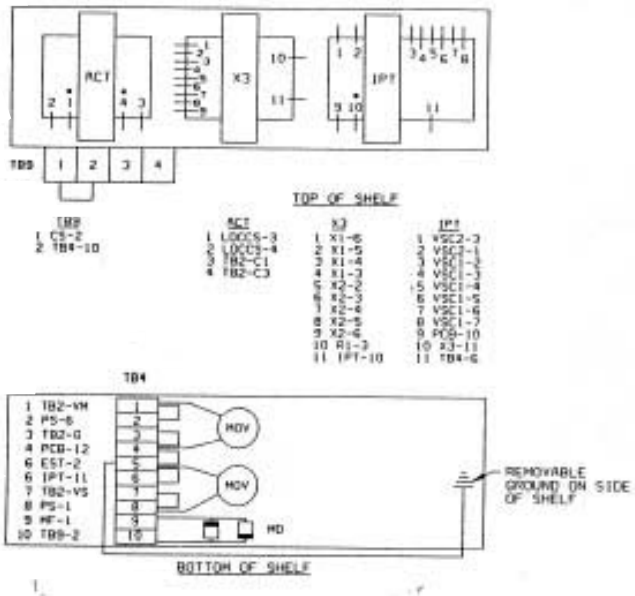

NOTES:

1. THE CODED IDENTIFICATION BESIDE EACH NUMBERED TERMINAL IDENTIFIES THE ORIGIN OF THE LEAD BY COMPONENT AND TERMINAL.

2. FOR LARGE ADJUSTMENT OF RATIO CORRECTION, PLACE OUTPUT LEAD JBB-S2 ONTO THE AVAILABLE PUSH ON TAB (LOCATED AT THE TERMINAL BOARD ON TOP OF THE TAP CHANGER) AS SPECIFIED ON THE NAMEPLATE PER LOAD VOLTAGE.

3. FOR FINE ADJUSTMENT OF RATIO CORRECTION PLACE INPUT LEAD PD1-2 ON THE ACT TAP SPECIFIED ON THE NAMEPLATE PER LOAD VOLTAGE. THIS LEAD HAS A FLANGED SPADE TERMINAL FOR EASY REMOVAL.

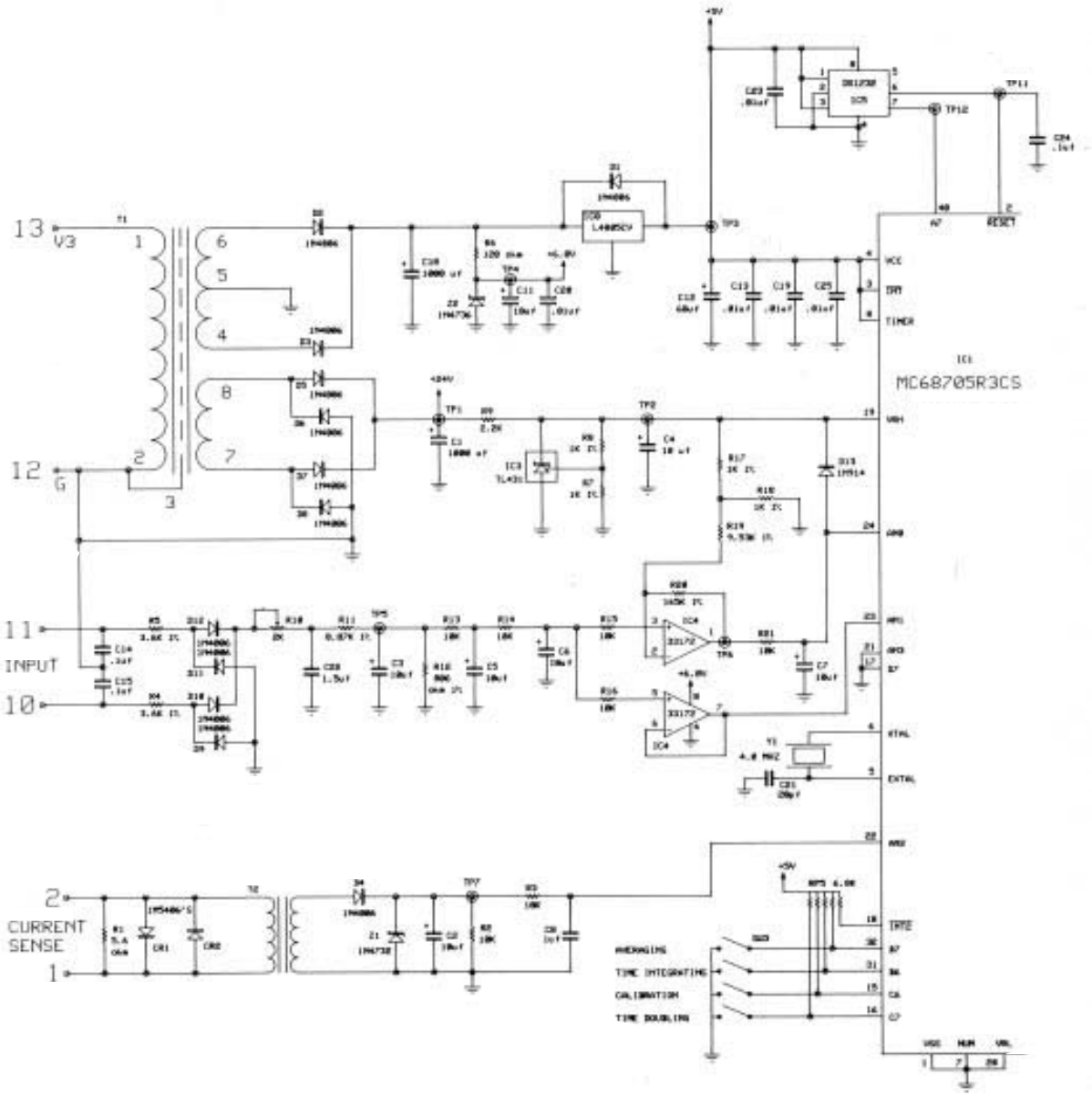

Figure 4-3.
Printed circuit board schematic.

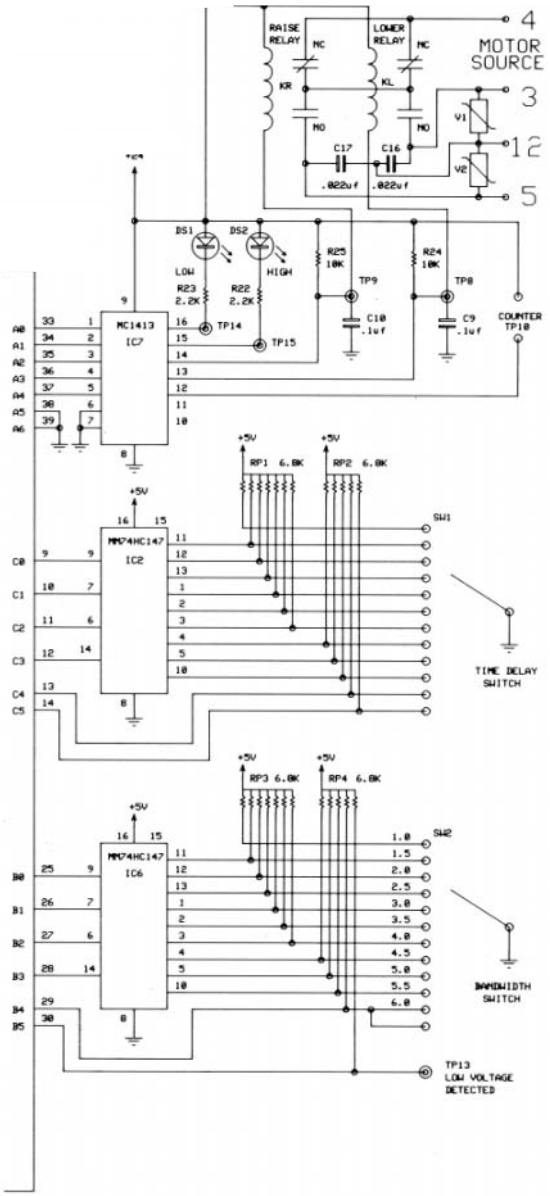

CL-2A Circuit Board Parts List

ITEM	DESCRIPTION	
R1	5.6 OHM 1/2W	5%
R2,3,13,14,15,16,21,24,25	10K 1/4W	5%
R4,5	3.6K RN60	1%
R6	120 OHM 1/2W	5%
R7,8,17,18	1K 1/4W	1%
R9,22,23	2.2K 1/2W	5%
R10	2K TRIMPOT 3006Y-1-202	
R11	8.87K 1/4W	1%
R12	806 OHM 1/4W	1%
R19	9.53K 1/4W	1%
R20	165K 1/4W	1%
RP1,3	6.8K SIP 4608X-101-682	
RP2,4,5	6.8K SIP 4606X-101-682	
D1,2,3,4,5,6,7,8,9,10,11,12	1N4006 DIODE	
D13	1N914	
DS1,2	LED MV5152	
CR1,2	1N5406	
Z1	1N4732	
Z2	1N4736A	
C1,18	1000 mf 50V UVX1H102MHA	
C2,3,4,5,6,7,11	10 mf 16V UVX1H102MHA	
C9,10,14,15	.1 mf 400V 16104J400G	
C8	1 mf 50V AVX SR-30 5E105MAA	
C12	68 mf 16V 10% SOLID TANTALUI	
C13,19,20,23,25	.01 mf 50V ECQ-V1H103JZ	
C16,17	.022 mf 1000V 50L2223	
C21	20 pf 16V DD-200	
C22	1.5 mf 50V TANTALUM T354E155K050AS	
C24	.1 mf 50V ECQ-V1H104JZ	
IC1	MC68705R3CS	
IC2,6	MM74HC147N	
IC3	TL431ILP	
IC4	MC33172P	
IC5	DS1232N	
IC7	MC1413P (ULN2003A)	
IC8	L4805CV	
Y1	4.0 MHZ CRYSTAL MP-1-4.0-3L	
SW1,2	12 POSITION ROTARY SWITCH (CTS)	
SW3	4 POS. DIP SWITCH 78RB04S	
T1	TRANSFORMER TAA142701	
T2	TRANSFORMER TAA142702	
KL,KR	RELAY GUARDIAN 1665-2C-24D OR TAKAMISAWA VB24STCU-E	
V1,2	V150LA10A	
CON2	TERMINAL STRIP SSW-116-01-T-	
CON1	CUSTOM CONNECTOR GPCB-1	
HEATSINK	THERMALLOY 6073B-SNE-1	
HEATSINK INSULATOR	THERMALLOY 43-77-9	
LED SPACER	HHS 4001	
FINE THREAD LOCKWASHER	BOURNS H-37-2	
CIRCUIT BOARD		

Now, with the input voltage set at nominal (in band), the following power supply voltages should be obtained between the specified test point and TP_0:

Table 4-1
Power Supply Voltages at Test Points

Test Point	Volts dc
TP_1	+28 ± 15%
TP_2	+5.0 ± 2%
TP_3	+5.0 ± 5%
TP_4	+7.0 ± 10%

Failure to Conform #1

Condition	Probable Fault
TP_1 Low	D_5, D_6, D_7, D_8
TP_2 Off	R_9, IC_3, C_4 or IC_1
TP_3 Off	IC $_8$, D_1, IC_5 or IC_1
TP_4 Off	R6, Z_2, C_{11} or IC_4
TP_3 and TP_4 Low	D_2, D_3, C_{18}, IC_8

If all power supply voltages are correct, each circuit generating an input to the microcomputer should be checked by taking the following steps:

CHECK NO. 2 - INPUT AND FILTERING

1. Connect the multimeter to test points TP_0 and TP_5.
2. Measure 2.5 volts dc ± 5% at TP_5.
3. Connect an ac coupled meter having a 200 millivolt range to test points TP_0 and TP_5. The reading should be less than 100 millivolts.

Failure to Conform #2

Condition	Probable Fault
DC Voltage Off	Any components up to TPs in the input section
AC Ripple High	D_9, D_{10}, D_{11}, D_{12}, C_{22}, C_3

CHECK NO. 3 - DIFFERENTIAL AMPLIFIER

1. Connect the multimeter to test points TP_0 to TP_6.
2. Adjust the input supply until the reading at TP_6 is 2.5 volts dc. The input should be 60 volts ac or 120 volts ac ±5%, depending upon the board being out of or in the control, respectively.
3. Switch the multimeter to ac and read less than 20 millivolts.
4. Switch back to dc.
5. Vary the input and read a 0.625-volt change at TP_6 for each 2.0-volts ac change in the input related to the 120 volts ac input supply.

Failure to Conform #3

Condition	Probable Fault
Input supply out of tolerance for 2.5 volts ac at TP_6 or ac ripple high	R_{17}, R_{18}, C_6, or IC_4
Output swing to input swing Off	R_{19}, R_{17}, R_{18}, R_{20} or IC_4

CHECK NO. 4 - MOTOR CURRENT SENSE

To test the motor current sensing circuitry of the circuit board, approximately .120 amps of current must be applied to the CURRENT SENSE input (terminals 1 & 2). This is accomplished as follows:

1. First connect the multimeter from TP_0 to TP_7, set for DC volts of a scale to read up to 5.0 volts.
2. With the board in the control, connect a 1000-ohm, 20-watt resistor **momentarily** from G to HS, on the fanning strip which leads to the back panel. The control should be powered externally with a 120 volt supply, attached to the EXTERNAL SOURCE terminals.
3. With the board out of the control, the same resistance can be used in series with a 120-volt ac supply, applied to the motor current sense terminals of the circuit board.
4. For either case, with the current applied, at least 1.5 volts should be measured. With the current removed, less than 0.4 volts should be measured. Failure to conform can involve any component in the motor current sense circuit.

CHECK NO. 5 - BANDWIDTH AND TIME DELAY CONTROLS

If no fault is found in any of the previous circuits, the bandwidth and time delay switches can be checked. As viewed from the back (component side), 13 terminals are readily visible on each switch. The terminal located at 11 o'clock is the center pole of the switch and is connected directly to ground.

1. Connect the multimeter to TP_0, set for DC volts of a scale to read up to 5.0 volts.
2. Each terminal on the switch should measure at least 3.0 volts, except the center pole and the terminal which corresponds to the present switch setting, which will read zero (0). As each switch is rotated through its settings, the "grounded" terminal should move accordingly. Note, on the bandwidth switch, that only 11 positions are actively used and that position 12 is connected together with position 11.
3. Failure to conform indicates a defective switch, or resistor packages RP_1, RP_2, RP_3, RP_4, or decoders IC_2 and IC_6.

CHECK NO. 6 - BAND EDGE LIGHT CIRCUITS

If the symptoms of the malfunction indicate the problem may be in the HIGH or LOW band edge lights, they may be checked as follows:

1. Set the control for 120.0 V setting and a 2 V bandwidth.
2. Apply 120.0 V ac to the EXTERNAL SOURCE terminals, place the power switch on EXTERNAL, and the AUTO/OFF/ MANUAL switch on AUTO.
3. Connect the multimeter toTP_0, set for dc volts of a scale to read up to 28 volts. Connect the positive meter lead to TP_{14}, and expect to measure approximately 28 V.
4. Now, slowly vary the applied voltage to below 119 V, and observe the LOW BAND indicator, expecting it to light. The voltage at TP_{14} should correspondingly drop to less than 1 V.
5. If the indicator does not light, but TP_{14} does go low, the problem is a defective LED DS_1, or resistor R_{23}. If TP_{14} does not go low, then the problem may be a defective IC_7.
6. Now, reconnect the multimeter to TP_{15} and expect to measure approximately 28 V.
7. Vary the applied voltage to above 121 V, and observe the HIGH BAND indicator, expecting it to light. The voltage at TP_{15} should correspondingly drop to less than 1 V.
8. If the indicator does not light, but TP1s does go low, the problem is a defective LED DS_2, or resistor R_{22}. If TP_{15} does not go low, then the problem may be a defective IC_7.

CHECK NO. 7 - RAISE AND LOWER RELAY CIRCUITS

If the symptoms of the malfunction indicate the problem may be in the RAISE or LOWER relays, they may be checked as follows:

1. Set the control for 120.0 V setting, 2 V bandwidth, and 10 second time delay.
2. Apply 120.0 V ac to the EXTERNAL SOURCE terminals, place the power switch. on EXTERNAL, and the AUTO/ OFF/MANUAL switch on AUTO.
3. Connect the multimeter to TP_0, set for dc volts of a scale to read up to 28 volts. Connect the positive meter lead to TP_9, and expect to measure approximately 28 volts.
4. Now, slowly vary the applied voltage to below 119 V. After the 10 second time delay period, the RAISE relay should close and the voltage at TP_9 should drop to less than 1 V. After 4 seconds, the relay will open and TP_9 will again measure 28 volts.
5. If the relay does not close (pronounced “click” should be heard), but TP_9 does go low, the problem is a defective RAISE relay coil. If TP_9 does not go low, then the problem may be a defective IC_7.
6. Now, reconnect the multimeter to TP_9 and expect to measure approximately 28 V.
7. Bring the applied voltage back into band and hold it in band for approximately 15 seconds. (This is to “clear” the memory on the relay retry feature.) Now, vary the voltage to above 121 V, and after the 10 second time delay period, the LOWER relay should close and the voltage at TP_9 should drop to less than 1 V. After 4 seconds, the relay will open and TP_9 will again measure 28 volts.
8. If the relay does not close (pronounced “click” should be heard), but TP_9 does go low, the problem is a defective LoWER relay coil. If TP_9 does not go low, then the problem may be a defective IC_7.
9. Now, remove the multimeter from TP_0 and TP_9, and set it to read ac volts up to 125 volts. Connect the meter to the terminal position labeled G (position 12) and LOWER (position 3) on the **output terminal strip** of the circuit board.
10. As the LOWER relay contacts close, approximately 120 V should be measured. The contacts remain closed, however, for only 4 seconds, and then open for 30 seconds before again closing.
11. If voltage is not measured when the contacts close, then the LOWER relay is defective. Note: Be certain the AUTO/OFF/ MANUAL switch is in the AUTO position.
12. Bring the applied voltage back into band and hold it in band for approximately 15 seconds. Now vary the voltage to just below 119V.
13. Connect the multimeter to the terminal position labeled G (position 12) and RAISE (position 5) on the **output terminal strip** of the circuit board.
14. As the RAISE relay contacts close, approximately 120 volts should be measured. The contacts remain closed, however, for only 4 seconds, and then open for 30 seconds before again closing.
15. If voltage is not measured when the contacts close, then the RAISE relay is defective. Note: Be certain the AUTO/OFF/ MANUAL switch is in the AUTO position.

CHECK NO. 8 - OPERATIONS COUNTER

If the symptoms of the malfunction indicate the problem may be in the operations counter, it may be checked as follows:

1. Set the control for 120.0 V setting, 2 V bandwidth, and 10 second time delay.
2. Apply 120.0 V ac to the EXTERNAL SOURCE terminals, place the power switch on EXTERNAL, and the AUTO/ OFF/MANUAL switch on AUTO.
3. Connect the muiltimeter to TP_0, set for dc volts of a scale to read up to 28 volts. Connect the positive meter lead to TP_{10}, and expect to measure approximately 28 volts.
4. **Momentarily** connect a 1000-ohm, 20-watt resistor from G to HS on the fanning strip which leads to the back panel. (This assumes the fanning strip is connected to the output-terminal strip of the circuit board.)
5. The voltage measured at TP_{10} should drop to less then 1 volt and the operations counter should partially increment as the resistor connection is maintained. When the connection is interrupted, TP_{10} should go high and the operations counter increment should complete.
6. If the counter does not increment, but TP_{10}, does go low, the problem is a defective operations counter. If TP_{10} does not go low, then the problem may be a defective IC_7.

CHECK NO. 9 - WATCHDOG CIRCUIT

If the control appears completely dead and voltage measurements external to the circuit board indicate that a voltage source is being delivered to the board, a problem could be occurring in the watchdog circuitry. This is checked by connecting an oscilloscope between TP_0 and TP_{12}, while the circuit board is energized. A pulse train of approximately 5 V amplitude, occurring at least every 150 milliseconds, should be observed. Now connect the oscilloscope probe to TP_{11} and a dc voltage of at least 3.0 volts should be measured. If the pulse train is not present, or TP_{11} is not above 3.0 volts, then either the microprocessor (ICI) or watchdog (IC_5) are defective. Further analysis requires disconnecting or isolating the two components as the loading effects from one device can affect the other device.

No attempt should be made to further analyze these problems or to replace IC_1. Contact Cooper Power Systems service for board exchange.

CIRCUIT BOARD REMOVAL

The printed circuit board can be physically removed from the control and yet remain electrically connected for test purposes. To keep the printed circuit board electrically connected to the control, follow the numbered steps, but DO NOT disconnect the fanning terminal strip as described in Step No. 1.

1. Loosen the screws on the interconnecting terminal strip on the printed circuit board to drop the fanning strip clear.
2. Remove the counter quick disconnects.
3. Loosen the locking strips on the bandwidth knob and the time-delay knob and turn them until they clear the knobs.
4. Remove the time-delay knob.
5. Remove the bandwidth knob.
6. Remove the panel nuts from the bushings that are located under the knobs.
7. Loosen the two side screws that are engaged in slots at the bottom of the board frame to allow free movement of the printed circuit board.
8. Swing the top of the board away from the front panel until the control shafts are clear. Lift the board free of the slots in the side brackets (Figure 4-4).

The replacement of the printed circuit board is accomplished by following the above steps in the reverse order. To correctly orient the knobs, observe the flattened shaft and corresponding knob cavity.

By leaving the fanning strip attached to the printed circuit board removed from the control, it is possible to thoroughly test the entire control assembly. The fanning strip concept provides reliable screw-down-type terminals for rapid removal and replacement.

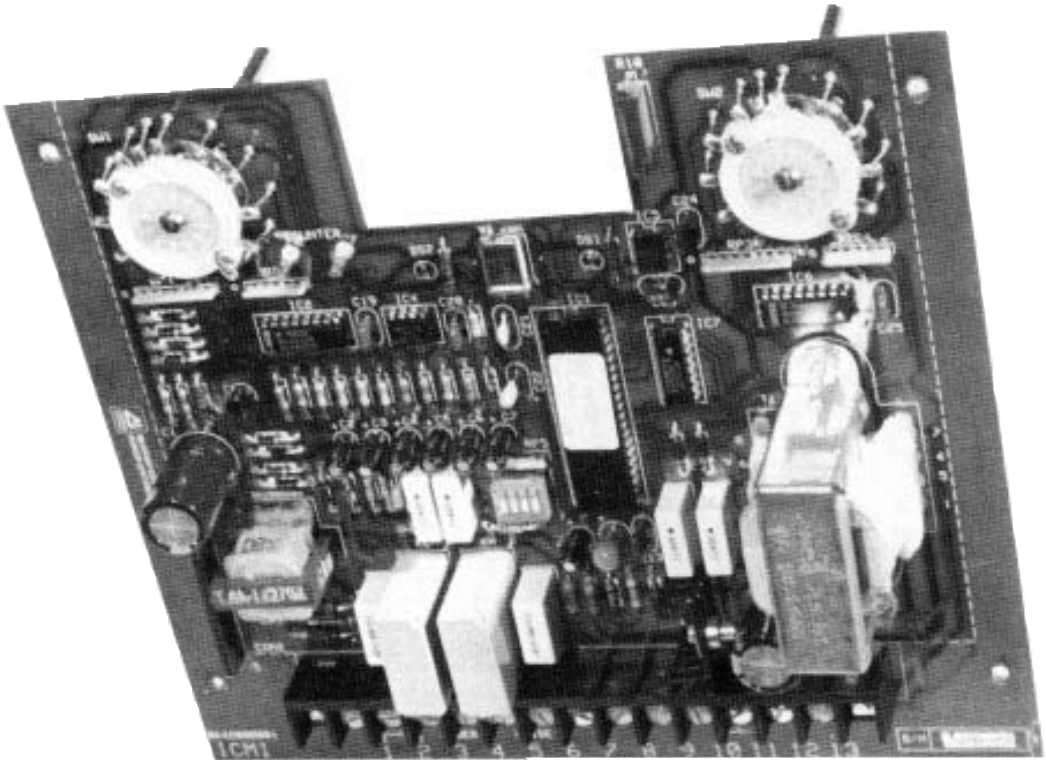

Figure 4-4.
Printed circuit board removed.

ACCESSORIES - Section 5

The following accessories are available for use with the regulator control to perform various functions. They can be mounted in the same enclosure as the control; however, if a number of them are used, a second enclosure is required. Most can be either installed at the factory or retrofit in the field by the customer. Those that can be retrofit are listed in the spare parts section.

Heater Assembly

The thermostatically controlled heater assembly is best used in high-humidity areas. The heater assembly shown in Figure 5-1 is located in the lower-left corner of the rear panel.

The heater can be manually turned on or off by means of the toggle switch located on the heater assembly. In the ON position the thermostat in the heater assembly will turn the heater on when the temperature falls below 85˚F. The thermostat turns the heater off when the temperature exceeds 100˚F. For full details refer to *S225- 10-1 Supplement 2.*

Figure 5-1.
Heater.

Voltage Reduction Control

The voltage reduction control accessory (Figure 5-2) can provide system load management through its ability to trigger the regulator to reduce voltage. Its application is ideal in situations where power demands surpass available capacity and where there are extraordinary peak loads.

The voltage reduction control provides three reduction levels: 2-1/2%, 5%, and 7-1/2% of regulated voltage level. Any one of these three levels can be manually selected by turning the single control on the panel to the desired percent reduction. The reduction steps are provided by an autotransformer.

Through the use of plug-in relays and appropriate percentage connections to the rear terminal strip, any of these three reduction levels can be selected via remote activation signal. Many standard relay coil voltage selections - ac or dc - are available to match the relay to the remote control system. For full details refer to *S225-10-1 Supplement 3.*

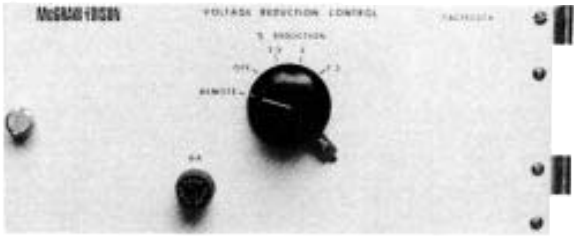

Figure 5-2.
Voltage reduction control.

Voltage Limiter

The voltage limiter accessory (Figure 5-3) permits a regulator's maximum and minimum output to be selected, protecting the consumer from abnormally high or low voltages resulting from:

1. Defective functioning of the regulator control panel.
2. Abnormal loading of the feeder.
3. Inaccurate regulator control settings (voltage level, bandwidth, line drop compensations, etc).
4. Heavy loading by the first customer while there is a leading power factor on the feeder.
5. Light loading at the first customer with heavy loading on the feeder at the same time.

The lower-limit control can be disabled without influencing the upper-limit control. Turning the upper-limit control off, however, disables both controls. With both controls turned off, power may be applied to the voltage limiter's external test terminals for operational checks. The range of the lower-limit setting is 105 to 120 volts; the range of the upper-limit setting is 120 to 135 volts.

The raise or lower motor circuit of the regulator is interrupted when a set voltage limit is exceeded. This interruption provides total override of the main control. For full details refer to S225-*10-1 Supplement* 4.

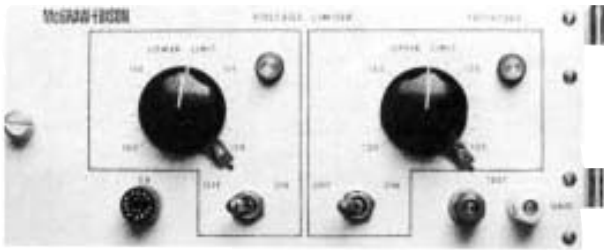

Figure 5-3.
Voltage limiter.

Auxiliary Current Transformer

The auxiliary current transformer (Figure 5-4) steps up the 0.2ampere control current supply to a usable 2.5-ampere or 5.0ampere source for special metering purposes. The two jumpers on the terminal strip on the rear of the accessory panel determine the current available from the auxiliary current transformer.

The auxiliary current transformer has an accuracy of ± 1% with 25-VA burden at a 70% power factor. The secondary of the transformer must be short circuited - using the short-circuiting block provided - when a metering device is not connected to the secondary. For full details refer to *S225-10-1 Supplement 5.*

Meter Pac

The Meter Pac (Figure 5-5) is an instrumentation package designed for installation on single-phase voltage regulators. It is specifically designed for installation on Cooper Power Systems CL-1, CL-2, or CL-2A control panels. However, the Meter Pac can be installed on any device since it only requires a standard 1 20 VAC input, and a current input from a C.T. with a 0-0.2 ampere output.

The Meter Pac has an accuracy of ± 0.5% for the voltage range, an accuracy of + 0.6% for the current range, and accuracy of ± 3.0% for kW, kVA, and kVAR ranges, and an accuracy of ± 5.O% for harmonics.

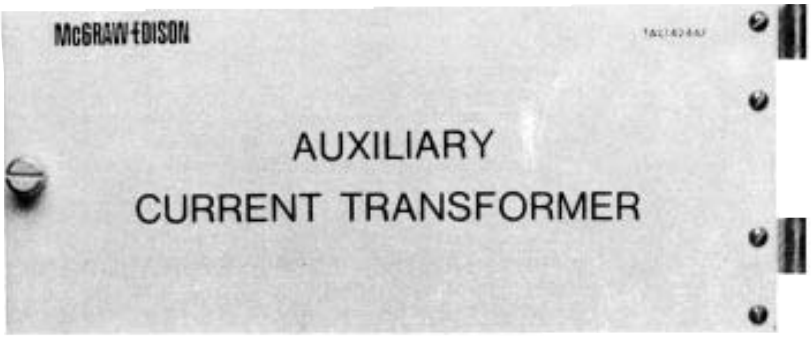

Figure 5-4.
Auxilliary current transformer.

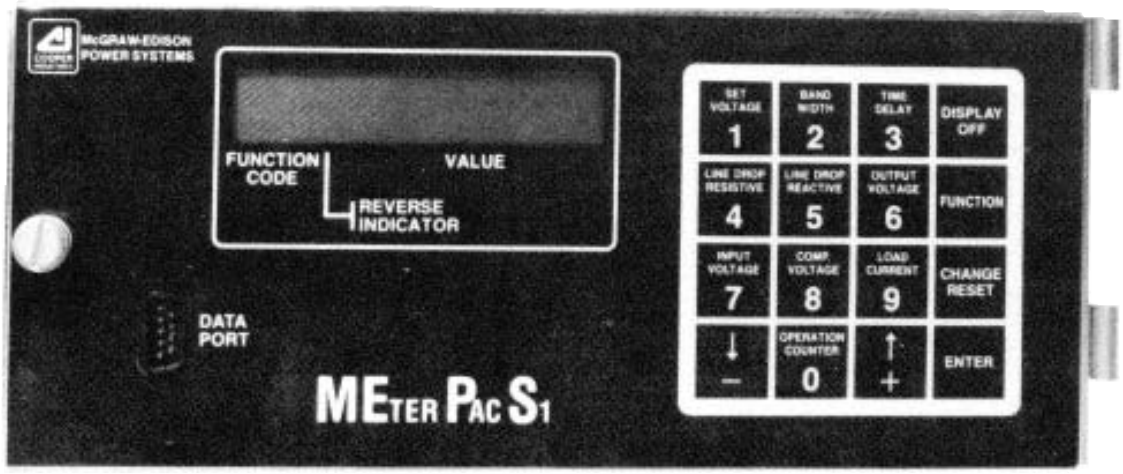

Figure 5-5.
Meter Pac.

DATA READER

The optional hand-held DATA READER allows the operator to copy all of the Function Code parameters from the Meter Pac for transfer to a personal computer. operation of the control is not affected by the DATA READER.

The DATA READER can store data from 100 different Meter Pac Controls before the memory must be purged.

Data Reader and Software Kit

The Data Reader and Soflware Kit includes the Data Reader, the Data Reader to control cable, the Data Reader to PC cable, and the Data Reader software. The non copy-protected software operates on an IBM-type personal computer with DOS 2.0 or higher operating system. The software allows the operator to perform the following functions:

1. Upload the data from the Data Reader to the software data base.
2. Erase the Data Reader memory.
3. Scan the data on the CRT.
4. Print reports.
5. Transfer data to another data base.

Data Reader Assembly

The Data Reader Assembly consists of the Data Reader and the Data Reader to control cable.

Figure 5-6.
Data Reader and Software Kit.

FAN COOLING ACCESSORY

Voltage regulators 250 kVA and larger can be equipped with fan cooling (Figure 5-7). Fan cooling increases the load capacity of the regulator by 25%. Special requirements are necessary on regulators using fan cooling, therefore the regulator must be ordered with fan cooling or with provisions for adding fan cooling. Mounting cooling fans flush to the plate-type radiator is accomplished by using T-bolts that secure the cooling fan to the bank of radiators.

The automatic operation of the fan is controlled by a thermometer having a thermal switch that will cycle the fan on or off when the top-oil temperature reaches predetermined temperature limits. The thermal switch has an upper limit adjustable from 80ºC to 110ºC. The differential from make to break is 6ºc to 10ºC. The thermal switch, when temperature activated or deactivated, signals a relay which turns the fan on or off. For full details, refer to *5225-10-1 Supplement 8.*

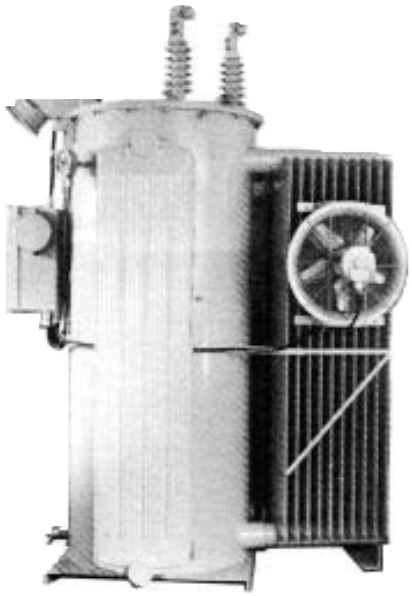

Figure 5-7.
Fan Cooling accessory.

SPARE PARTS • Section 6

When ordering replacement parts or field-installable accessories for your Cooper Power Systems VR-32 step-voltage regulator, provide the following information:

1. Regulator serial number (found on control nameplate).
2. Quantity of each part required.
3. Part code number of each part (as shown in Table 6-1).
4. Description of each part (as shown in Table 6-1).

Additional parts and installation information for tap changers is found in bulletin *S225-10-2.*

Table 6-1
Spare Parts

Description	Part Code No	Reference Figure
• Bypass series arrester (with mounting hardware)	5004	Figure 1-2
• Complete bushing assembly (indicate if for S, L, or SL application)		
Dry-type (95 kV BIL and below)	+	Figure 6-1
Oil-filled (150 kV BIL and above) (Note oil-filled bushings available only as complete assembly)	+	(not shown)
• Dry-type bushing components		
Terminal cap	+	Figure 6-1
Terminal cap gasket	+	Figure 6-1
Porcelain	+	Figure 6-1
Bushing/tank gasket	+	Figure 6-1
Clamp w/bolts	+	Figure 6-1
Clamp spring	+	Figure 6-1
• Position indicator (complete)	4000	Figure 1-8
• Position indicator glass cover	4001	Figure 1-8
• Position indicator external drive cable (not used on regulators without junction box)	4004	(not shown)
• Position indicator internal drive cable (provide total length of old cable in inches)	+	(not shown)
• 928D and 170C Spring-drive tap changer parts		
Replacement motor kit A (with sprocket and pin)	3014	Figure 6-2
Main movable contact right hand*	3007	Figure 6-2
Main movable contact left hand**	3006	Figure 6-2
Main stationary contact	3002	Figure 6-2
Reversing stationary contact right hand**	3004	Figure 6-2
Reversing stationary contact left hand**	3003	Figure 6-2
Reversing movable contact—928D	3022	Figure 6-2
Reversing movable contact—170C	3005	Figure 6-2
• 770B Direct-drive tap changer parts		
Replacement motor kit A. (use old shield)	3031	Figure 6-4
Replacement motor shield	3068	Figure 6-3
Main or reversing movable contact	3059	Figure 6-3
Main stationary contact	30s3	Figure 6-3
Reversing stationary contact	3067	Figure 6-3
Reversing stationary neutral contact (non-arcing)	3057	Figure 6-3

Description	Part Code No.	Reference Figure
• 66OC Direct-drive tap changer parts		
Replacement motor kit A.	3031	Figure 6-4
Main movable contact	3029	Figure 6-4
Main stationary contact	3023	Figure 6-4
Reversing stationary contact	3037	Figure 6-4
Reversing stationary neutral contact (non-arcing)	3027	Figure 6-4
Reversing movable contact	3036	Figure 6-4
• CL control parts		
Complete CL-2A control (includes 6500, back panel, cabinet, no cable)	6070	(not shown)
CL-2A front panel only (includes all operational electronics of control)	6030	Figure 2-1
CL-2A printed Circuit board	6063	
Neutral light bulb	6051	Figure 2-1
Motor fuse (6A) (pack of 5)	6047	Figure 2-1
Panel fuse (2A) (pack of 5)	6048	Figure 2-1
CR relay and terminal strip	6071	Figure 5-2
• Control cable***		
15' for remote mounting	6104	(not shown)
20' for remote mounting	6105	(not shown)
25' for remote mounting	6106	(not shown)
30' for remote mounting	6107	(not shown)
	•	
• Field-installable accessories See page 5-1 for further information.		
Control cabinet heater	9000	Figure 5-1
Fan cooling	9005	Figure 5-5
Auxiliary control cabinet and hardware	9050	(not shown)
Voltage Reduction Control	9040	Figure 5-2
Voltage Limiter	9065	Figure 5-3
Meter Pac	9075	Figure 5-5
Auxiliary Current Transformer	9055	Figure 5-4
• Accessories for data extraction.		
Data Reader & Software Kit	9076	Figure 5-2
Data Reader Assembly	9977	(not shown)

*Motor Kits include motor, capacitor and hardware.
**When contact viewed from motor-side of tap changer.
***Current design has 10 conductors. 12 conductor cables with required terminations are available for obsolete designs or to mount CL-4C on previous designs. Contact factory service department for details.
+ See parts manual or contact factory service department.
• other lengths available. Contact factory service department.

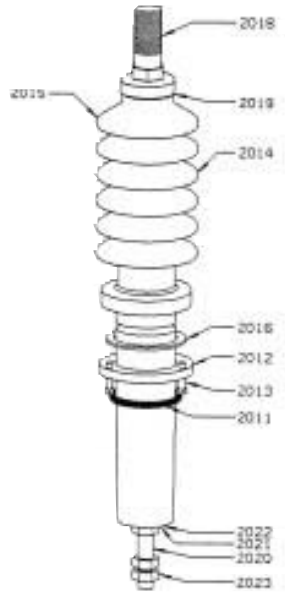

BUSHING

PART NO.	DESCRIPTION
2015	COMPLETE BUSHING ASSEMBLY W/ HARDWARE
2014	BUSHING (PORCELAIN)
2018	TERMINAL CAP
2020	ROD ASSEMBLY
2019	GASKET
2016	GASKET
2021	CONICAL SPRING WASHER
2023	HEX JAM NUT
2011	SPRING
2012	CLAMP RING
2013	SPECIAL BOLT
2022	PLAIN WASHER

Figure 6-1.
High-voltage bushing.

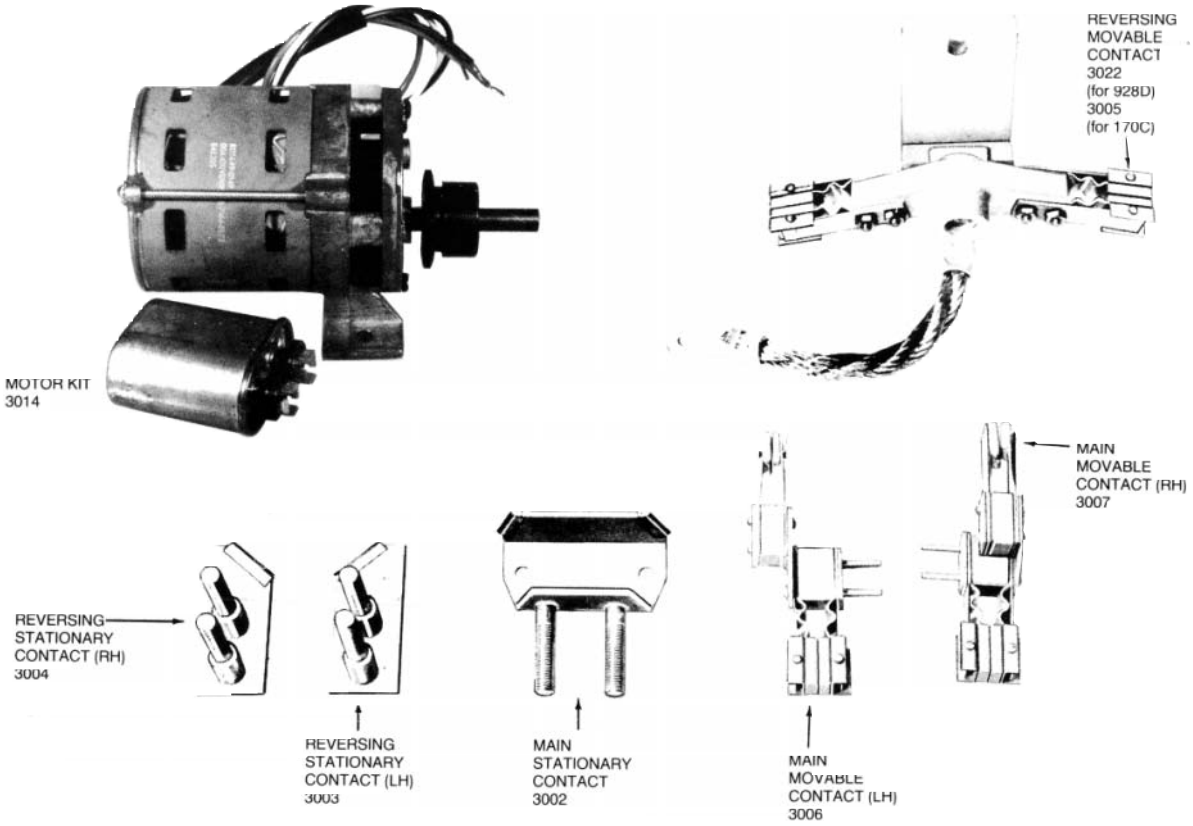

Figure 6-2.
Replacement parts for spring-drive tap changers 928D and 170C.

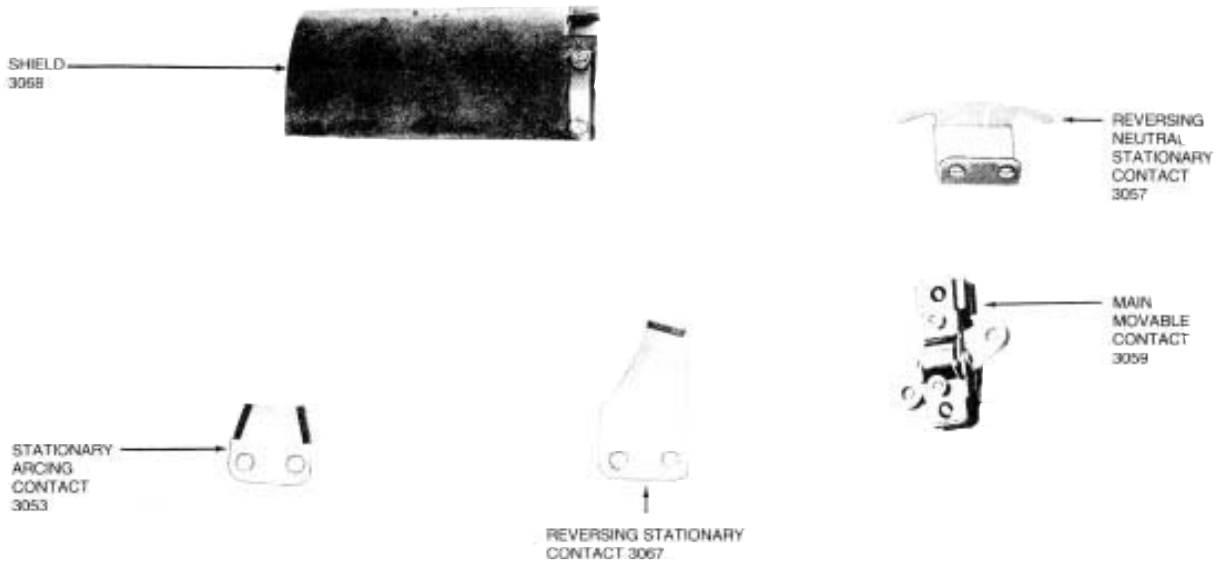

Figure 6-3
Replacement parts for direct-drive tap changer 770B.

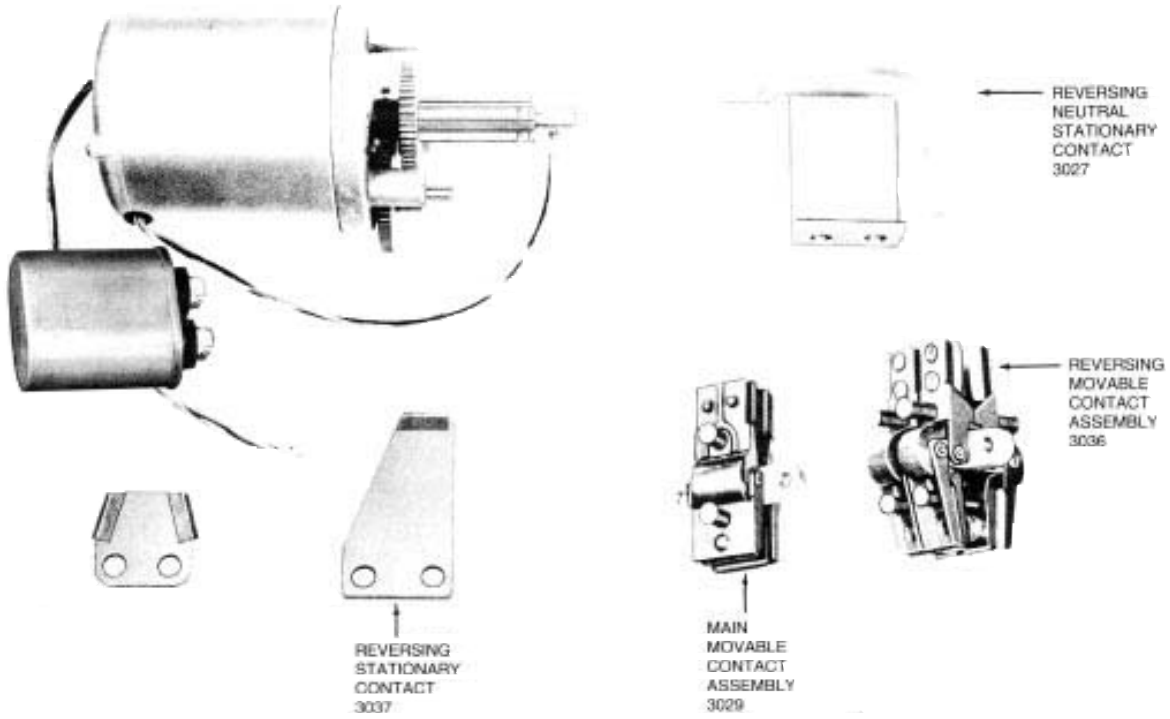

Figure 6-4
Replacement for direct-drive tap changer 660C.

APPENDIX • Section 7

SERIAL NUMBERS Serial numbers for Cooper Power System's regulators are coded in the following manner:

92 - Year of manufacture
Z - Factory location (Z-Zanesville)
A - Month of Manufacture
A = January,
B = February,
C = March,
D = April,
E = May,
F = June,
G = July,
H = August,
J = September,
K = October,
L = November,
N = December.
XXX - Arbitrary numbers and letters assigned per factory work order.
001 - Serial number of unit on a given factory work order (001-999)

92 Z A XXX 001

LIST OF TABLES

The following is a list of all tables found in this document and the page on which they are located.

Table Number	Table Title	Page Number
1-1	Shunt Arrester Application Data.	1-8
1-2	ADD-AMP Capabilities.	1-9
2-1	VR-32 Tap Connections and Voltage Levels.	2-7
2-2	Current Transformer Applications.	2-9
3-1	Tap Changer Model Application Chart.	3-1
4-1	Power Supply Voltages at Test Points.	4-9
6-1	Spare parts.	6-1

LIST OF SCHEMATIC DIAGRAMS

Figure	Description	Page
1-4	Typical Connection Diagrams	1-4
1-9	Power Circuit - Series Winding Located on the Source Side	1-13
1-10	Power Circuit - Series Winding Located on the Load Side	1-11
1-11	Power Circuit - Series Transformer	1-11
1-13	Internal Wiring of Spring-Drive Regulator with Series Winding Located on the Source Side	1-12
1-14	Internal Wiring of Direct-Drive Regulator with Series Winding Located on the Load Side	1-13
1-15	Internal Wiring of Regulator with Series Winding on the Input Side, with Differential Potential Transformer	1-14
1-16	Internal Wiring of Regulator with Load Winding on the output Side, with Differential Potential Transformer	1-15
1-17	Back Panel Signal Circuit	1-16
2-2	Dipswitch Location on Printed Circuit Board	2-3
2-3	VR-32 Regulator and CL-2A Control Wiring Schematic Diagram	2-5
2-7	SCADA Connections to CL-2A Control	2-11
2-8	SCADA Connections Basic Scheme	2-12
2-9	Typical User Provided Voltage Reduction Module	2-12
2-10	8 - Conductor Cable	2-13
2-11	9 - Conductor Cable	2-13
2-12	10 - Conductor Cable	2-13
4-1	Junction Box Wiring Diagram	4-1
4-2	Physical Wiring	4-5
4-3	Printed Circuit Board Schematic	4-7

Cooper Power Systems

Quality from
Cooper Industries

Cooper Power Systems, Inc.
is a registered trademark of Cooper Industries, Inc.

P.O. Box 2850, Pittsburgh, PA, 15230