SIEMENS

Numerical Circuit Breaker Failure Protection

7SV512 V1.0

Instruction Manual Order No. C53000–G1176–C91–4

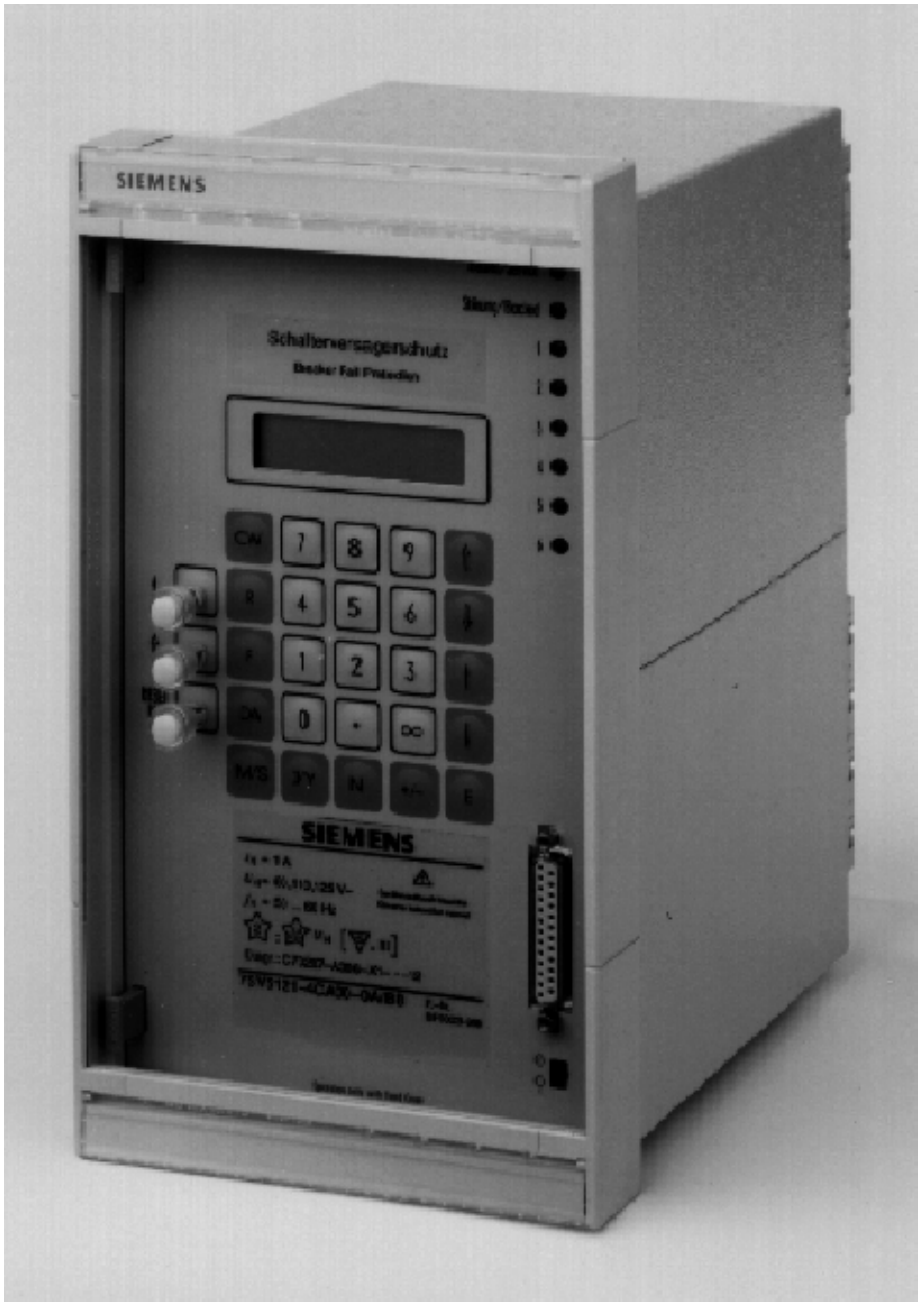

Figure 1 Illustration of the numerical circuit breaker failure protection relay 7SV512 (in flush mounting case)

© Siemens AG 1994

SIEMENS

CE

Conformity

This product is in conformity with the directive of the Council of the European Communities on the approximation of the laws of the Member States relating to electromagnetic compatibility (EMC Council Directive 89/336/EEC) and concerning electrical equipment for application within specified voltage limits (Low-voltage directive 73/23 EEC).

Conformity is proved by tests that had been performed according to article 10 of the Council Directive in accordance with the generic standards EN 50081 – 2 and EN 50082 – 2 (for EMC directive) and the standards EN 60255 – 6 (for low-voltage directive) by Siemens AG by Siemens AG.

The device is designed and manufactured for application in industrial environment.

The device is designed in accordance with the international standards of IEC 60255 and the German standards DIN 57435 part 303 (corresponding to VDE 0435 part 303).

Contents

1 Introduction **6**

1.1 Application 6

1.2 Features 7

2 Design **8**

2.1 Arrangements 8

2.2 Dimensions 10

2.3 Ordering data 12

3 Technical Data **13**

3.1 General data 13
3.1.1 Inputs/outputs 13
3.1.2 Electrical tests 15
3.1.3 Mechanical stress tests 16
3.1.4 Climatic stress tests 17
3.1.5 Service conditions 17
3.1.6 Design 17

3.2 Circuit breaker failure protection 18

3.3 Circuit breaker pole discrepancy supervision 18

3.4 Ancillary functions 19

4 Method of operation **20**

4.1 Operation of complete unit 20

4.2 Circuit breaker failure protection 22
4.2.1 General 22
4.2.2 Current flow monitoring 23
4.2.3 Processing of the circuit breaker auxiliary contacts 24
4.2.4 Initiation conditions and delay times 26
4.2.4.1 Common phase initiation 26
4.2.4.2 Two-stage breaker failure protection with common phase initiation 27
4.2.4.3 Phase segregated initiation 27
4.2.4.4 Combined initiation conditions 30
4.2.4.5 Function examples 30
4.2.5 Circuit breaker not fully operational 31
4.2.6 Transfer trip to the remote end circuit breaker 31
4.2.7 Hardware supervision and blocking 31

4.3 End fault protection 33

4.4 Circuit breaker pole discrepancy supervision 33

4.5 Ancillary functions 34
4.5.1 Processing of annunciations 34
4.5.1.1 Indicators and binary outputs (signal relays) 34
4.5.1.2 Information on the display panel or to a personal computer 34
4.5.1.3 Information to a central unit (optional) 35
4.5.2 Data storage and transmission for fault recording 35
4.5.3 Operating measurements and conversion 35

4.5.4 Monitoring functions . . . 36
4.5.4.1 Hardware monitoring . . . 36
4.5.4.2 Software monitoring . . . 37
4.5.4.3 Monitoring of external measuring transformer circuits . . . 37

5 Installation instructions . . . 38

5.1 Unpacking and repacking . . . 38

5.2 Preparations . . . 38
5.2.1 Mounting and connections . . . 39
5.2.1.1 Model 7SV512⋆–⋆B⋆⋆⋆ for panel surface mounting . . . 39
5.2.1.2 Model 7SV512⋆–⋆C⋆⋆⋆ for panel flush mounting or cubicle installation . . . 39
5.2.2 Checking the rated data . . . 39
5.2.2.1 Control d.c. voltage of binary inputs . . . 39
5.2.3 Checking the LSA data transmission link . . . 41
5.2.4 Connections . . . 42
5.2.5 Checking the connections . . . 44

5.3 Configuration of operational functions . . . 45
5.3.1 Operational preconditions . . . 45
5.3.2 Settings for operating parameters – address block 70 . . . 45

5.4 Configuration of the device functions . . . 48
5.4.1 Introduction . . . 48
5.4.2 Programming the scope of functions – address block 78 . . . 49

5.5 Marshalling of binary inputs, binary outputs and LED indicators . . . 50
5.5.1 Introduction . . . 50
5.5.2 Marshalling of the binary inputs – address block 61 . . . 52
5.5.3 Marshalling of the signal output relays – address block 62 . . . 55
5.5.4 Marshalling of the LED indicators – address block 63 . . . 58
5.5.5 Marshalling of the command (trip) relays – address block 64 . . . 60

5.6 Configuration parameters for localized substation automation – address block 69 . . . 62

6 Operating instructions . . . 64

6.1 Safety precautions . . . 64

6.2 Dialog with the relay . . . 64
6.2.1 Membrane keyboard and display panel . . . 64
6.2.2 Operation with a personal computer . . . 65
6.2.3 Operational preconditions . . . 65
6.2.4 Representation of the relay (front view) . . . 66

6.3 Setting the functional parameters . . . 67
6.3.1 Introduction . . . 67
6.3.1.1 Parameterizing procedure . . . 67
6.3.1.2 Selectable parameter sets . . . 68
6.3.1.3 Setting of date and time . . . 69
6.3.2 Initial displays – address blocks 00 and 10 . . . 70
6.3.3 Power system data – address block 11 . . . 70
6.3.4 Settings for circuit breaker failure protection – address block 12 . . . 72
6.3.5 Settings for fault recording – address block 28 . . . 77
6.3.6 Settings for measured value monitoring – address block 29 . . . 78
6.3.7 Settings for breaker pole discrepancy supervision – address block 38 . . . 79

6.4 Annunciations . . . 80
6.4.1 Introduction . . . 80
6.4.2 Operational annunciations – address block 51 . . . 81
6.4.3 Fault annunciations – address block 52 to 54 . . . 85
6.4.4 Circuit breaker operation statistics – address block 56 . . . 88
6.4.5 Read-out of operational measured values – address block 57 . . . 89

6.5 Operational control facilities . . . 90
6.5.1 Adjusting and synchronizing the real time clock – address block 81 . . . 90
6.5.2 Erasing stored annunciations and counters – address block 82 . . . 91
6.5.3 Off/On control of part functions of the device . . . 92
6.5.4 Selection of parameter sets – address block 85 . . . 94
6.5.4.1 Read-out of settings of a parameter set . . . 94
6.5.4.2 Change-over of the active parameter set from the operating panel . . . 94
6.5.4.3 Change-over of the active parameter set via binary inputs . . . 95

6.6 Testing and commissioning . . . 96
6.6.1 General . . . 96
6.6.2 Testing the circuit breaker failure protection . . . 97
6.6.3 Testing the end fault protection . . . 98
6.6.4 Testing the circuit breaker pole discrepancy supervision . . . 98

6.7 Commissioning using primary tests . . . 99
6.7.1 Checking the initiation conditions . . . 99
6.7.2 Checking the local trip with breaker failure criterion from the auxiliary contacts . . . 100
6.7.3 Checking the local trip and the current circuits . . . 100
6.7.4 Checking the intertrip to the opposite feeder end . . . 101
6.7.4 Checking the bus-bar trip . . . 101

6.8 Putting the relay into operation . . . 102

7 Maintenance and fault tracing . . . **103**

7.1 Routine checks . . . 103

7.2 Replacing the clock module . . . 104

7.3 Fault tracing . . . 105
7.3.1 Replacing the mini-fuse . . . 106

8 Repairs . . . **108**

9 Storage . . . **108**

Appendix . . . **109**

A General diagrams . . . 110
B Connection diagrams . . . 113
C Tables . . . 116

NOTE:

This instruction manual does not purport to cover all details in equipment, nor to provide for every possible contingency to be met in connection with installation, operation or maintenance.

Should further information be desired or should particular problems arise which are not covered sufficiently for the purchaser's purpose, the matter should be referred to the local Siemens sales office.

The contents of this instruction manual shall not become part nor modify any prior or existing agreement, commitment or relationship. The sales contract contains the entire obligations of Siemens. The warranty contained in the contract between the parties is the sole warranty of Siemens. Any statements contained herein do not create new warranties nor modify the existing warranty.

1 Introduction

1.1 Application

The numerical circuit breaker failure protection relay 7SV512 provides rapid back-up fault clearance instruction to the associated circuit breakers in case the circuit breaker nearest to the fault fails to respond.

It is suitable for power systems of all voltage ranges. The initiation signal can be derived from any protection or supervision equipment or, in case of manual opening, from the discrepancy control switch of the breaker. Information from the circuit breaker auxiliary contact(s) is required for the breaker failure protection to function during faults which produce little or no current flow (e.g. Buchholz protection).

The breaker failure protection can operate single-stage or two-stage. When used as single-stage protection, the bus trip command is given to the adjacent circuit breakers if the protected feeder breaker fails. When used as two-stage protection, the first stage can be used to repeat the trip command to the relevant breaker, normally on different trip coils, if the initial trip command from the feeder protection is not executed. The second stage will result in a bus trip to the adjacent breakers, if the command of the first stage is not successful.

The bus trip command from the breaker failure protection can be routed to all circuit breakers linked to the same bus-bar (section) as the breaker that failed. It can also be transmitted to the remote end by means of a suitable communication link (e.g. PLC, radio wave, or optical fibre). The distribution logic which is necessary in case of multiple bus-bar sections is not part of 7SV512 relay.

The current level is monitored in each of the three phases against a set threshold. In addition, the residual earth current is monitored or – if this is not available – the negative sequence component of the phase currents derived by symmetrical component analysis. This ensures high security against malfunction by use of a 2-out-of-4 check of the current detectors.

Phase segregated current monitoring enables reliable breaker failure detection even during single-pole auto-reclose cycles provided the phase segregated trip signals of the feeder protection are connected to 7SV512. If two-stage breaker failure protection is used in conjunction with single-pole tripping by the feeder protection, the first stage trip may be performed single-pole or three-pole, as selected by the user. Different delay times can be set for single-phase faults and multi-phase faults.

If the protected circuit breaker is not operative (e.g. air pressure failure), instantaneous bus trip of the adjacent circuit breakers can be achieved following a feeder protection trip provided the relay is informed by an external breaker monitor.

An end fault protection function is integrated in the 7SV512 relay. An end fault is a short-circuit located between the circuit breaker and the current transformer set of the feeder. For this fault current flow is detected although the auxiliary contacts of the breaker indicate open breaker pole(s). A command signal is generated which can be transmitted to the remote end breaker.

A circuit breaker pole discrepancy supervision is integrated in the 7SV512. It prevents that only one or two poles of the breaker are open continuously. A three-pole trip is initiated when pole discrepancy is detected for a set time.

Special measures are taken to prevent malfunction of the relay. Besides the mentioned 2-out-of-4 check of the current detection elements the trip signals of the feeder protection must be connected in redundant manner so that they can be checked for plausibility. An additional hard-ware monitor ensures multi-channel control of the trip relays. Continuous monitoring of the measured values permits rapid annunciation of any fault in the measuring transformer circuits. Continuous plausibility monitoring of the internal measured value processing circuits and monitoring of the auxiliary voltages to ensure that they remain within tolerance are obviously inherent features.

Throughout a fault in the network the magnitudes of the instantaneous values are stored for a period of max. 3 seconds (0.66 seconds at 50 Hz for transmission to a central computer station) and are available for subsequent fault analysis.

Serial interfaces allow comprehensive communication with other digital control and storage devices. For data transmission a standardized protocol in accordance with DIN 19244 is used. The device can therefore be incorporated in Localized Substation Automation networks (LSA).

1.2 Features

- Processor system with powerful 16–bit–microprocessor;
- Complete digital measured value processing and control from data acquisition and digitizing of the measured values up to the trip decisions for the circuit breakers;
- Complete galvanic and reliable separation of the internal processing circuits from the measurement, control and supply circuits of the system, with screened analog input transducers, binary input and output modules and DC converter;
- Highly sensitive current detection;
- Independent current detectors for monitoring of current flow through each individual circuit breaker pole;
- 2-out-of-4 check of the current detectors;
- Short reset time, negligible overshoot time;
- Independent delay times for each circuit breaker pole;
- Single-stage or two-stage delay;
- Can be controlled from circuit breaker auxiliary contacts; if single-pole control is used, the individual auxiliary contacts of each pole, or series and parallel connection of the auxiliary contacts can be connected;
- Can be initiated by single-pole or three-pole trip commands;
- Can be initiated by different protection relays, even single-pole or three-pole or both;
- Instantaneous trip possible in case of defective circuit breaker;
- Transmission of trip command to the remote end possible;
- Integrated end fault protection for intertrip;
- Integrated circuit breaker pole discrepancy supervision;
- Calculation of operational measured values and indication on the front display;
- Simple setting and operation using the integrated operation panel or a connected personal computer with menu-guided software;
- Communication with central control and storage devices via serial interfaces is possible by means of optical fibre;
- Annunciation storage of the last three network faults, with optional real time clock;
- Data storage and transmission for fault records giving
  rapid fault analysis,
  detailed fault records;
- Counting of tripping commands as well as recording of fault data and accumulative addition of the interrupted fault currents;
- Continuous self-monitoring right from the d.c. circuits, through the current and voltage transformer inputs to the tripping relays, thus achieving maximum availability and a more corrective than preventive maintenance strategy.

2 Design

2.1 Arrangements

All protection functions including dc/dc converter are accommodated on one Double Europa Format plug-in module. This module is installed in a 7XP20 housing. Two different types of housing can be delivered:

– **7SV512⋆–⋆B⋆⋆⋆–** in housing 7XP2030–1 for **panel surface mounting**

  The housing has full sheet-metal covers, as well as a removable front cover with transparent plastic window.

  Guide rails are built in for the support of plug-in modules. On the top and bottom plates of the housing, contact areas which are electrically connected to the housing are installed to mate with the earthing springs of the module. Connection to earth is made before the plugs make contact. Earthing screws have been provided on the left hand side of the housing. Additionally, terminal 16 is connected to the case.

  All external signals are connected by means of 60 screwed terminals which are arranged over cut-outs on the top and bottom covers. The terminals are numbered consecutively from left to right at the bottom and top.

  The heavy duty current plug connectors provide automatic shorting of the c.t. circuits whenever the module is withdrawn. This does not release from the care to be taken when c.t. secondary circuits are concerned.

  For the optional interface to a central control and storage unit, an additional coupling facility has been provided. For the optical fibre interface (model 7SV512⋆–⋆⋆⋆⋆⋆–⋆**C**), two F–SMA connectors are provided.

  The degree of protection for the housing is IP51, for the terminals IP21. For dimensions please refer to Figure 2.2.

– **7SV512⋆–⋆C⋆⋆⋆–** in housing 7XP2030–2 for **panel flush mounting** or **cubicle installation**

  The housing has full sheet-metal covers, as well as a removable front cover with transparent plastic window.

  Guide rails are built in for the support of plug-in modules. On the top and bottom plates of the housing, contact areas which are electrically connected to the housing are installed to mate with the earthing springs of the module. Connection to earth is made before the plugs make contact. Earthing screws have been provided on the rear wall of the housing.

  All external signals are connected by means of connector modules which are mounted on the rear cover over cut-outs. For each electrical connection, one screwed terminal and one parallel snap-in terminal are provided. For field wiring, the use of the screwed terminals is recommended; snap-in connection requires special tools.

  The heavy duty current plug connectors provide automatic shorting of the c.t. circuits whenever the module is withdrawn. This does not release from the care to be taken when c.t. secondary circuits are concerned.

  For the optional interface to optical fibres (7SV512⋆–⋆⋆⋆⋆⋆–⋆**C**), a module with 2 F–SMA connectors is provided.

  The plug modules are labelled according to their mounting position by means of a grid system (e.g. **1A**2). The individual connections within a module are numbered consecutively from left to right (when viewed from the rear), (e.g. 1A**2**); refer to Figure 2.1.

  Degree of protection for the housing is IP51, for the terminals IP21. For dimensions please refer to Figure 2.3.

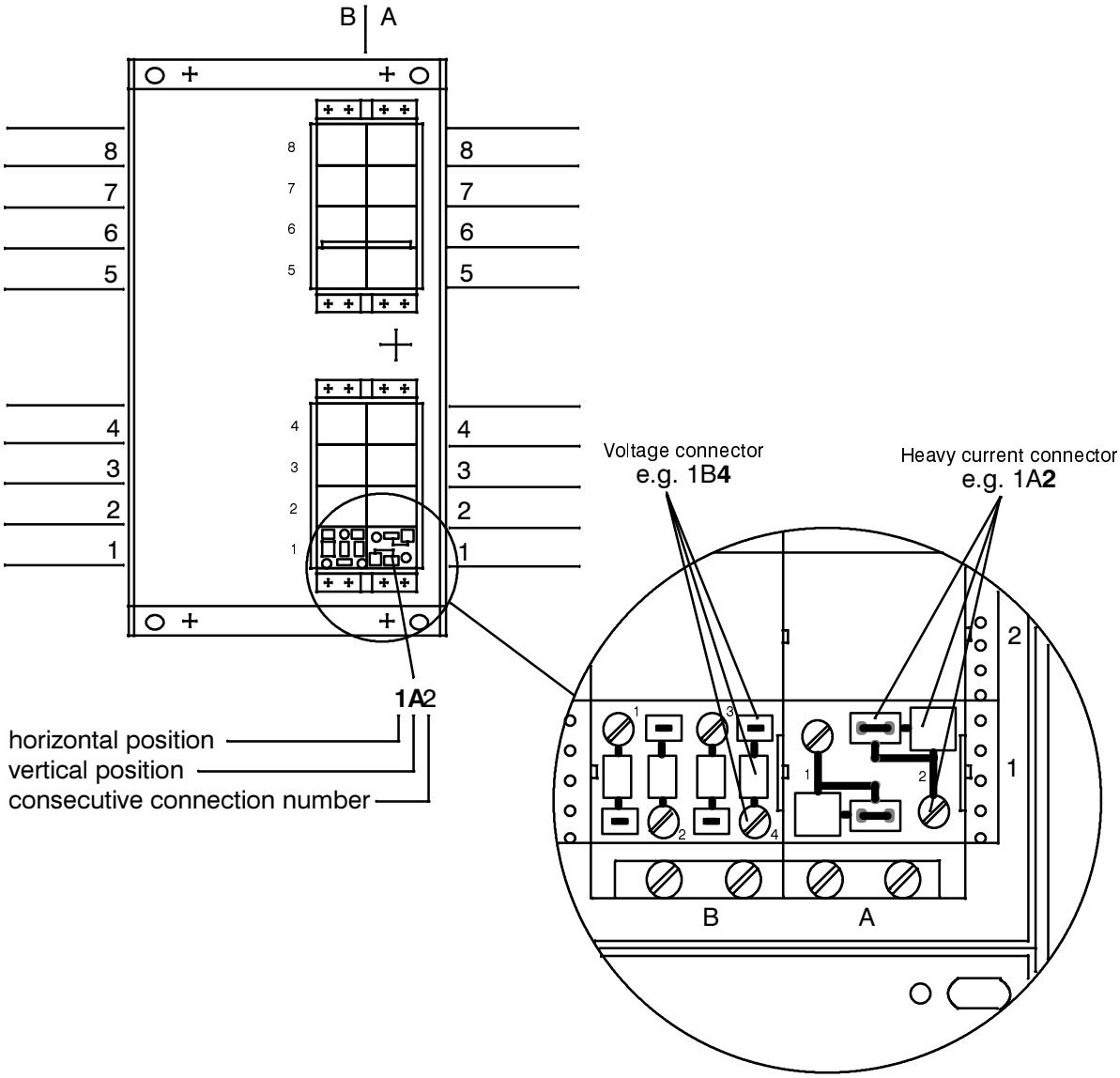

Figure 2.1 Connection plugs (rear view) – housing for flush mounting – example

2.2 Dimensions

Figures 2.2 and 2.3 show the dimensions of the various types of housing available.

7SV512 Housing for **panel surface mounting** 7XP2030 – 1

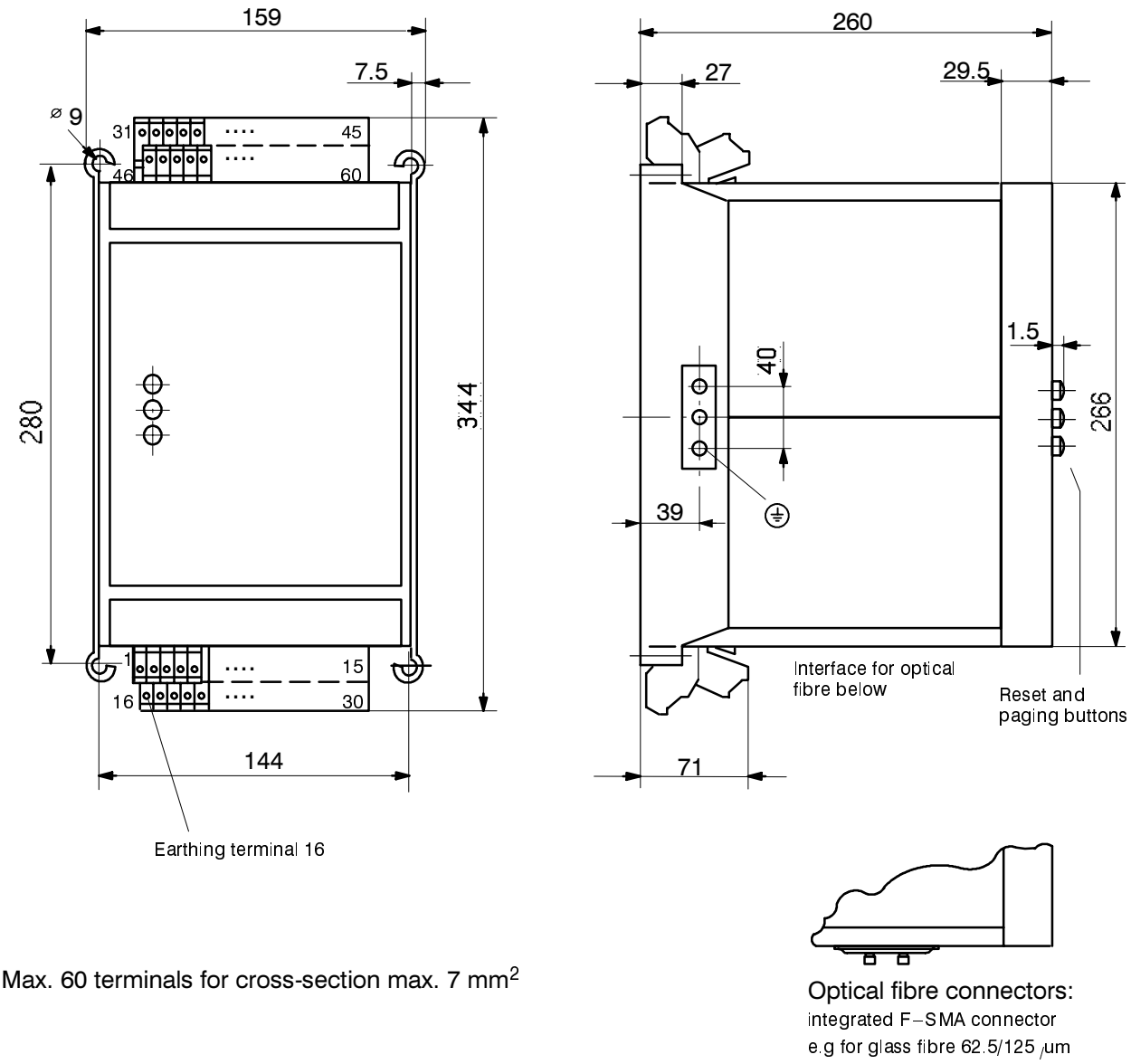

Max. 60 terminals for cross-section max. 7 mm^2

Dimensions in mm

Figure 2.2 Dimensions for housing 7XP2030 – 1 for panel surface mounting

7SV512 Housing for **panel flush mounting** or **cubicle installation** 7XP2030 – 2

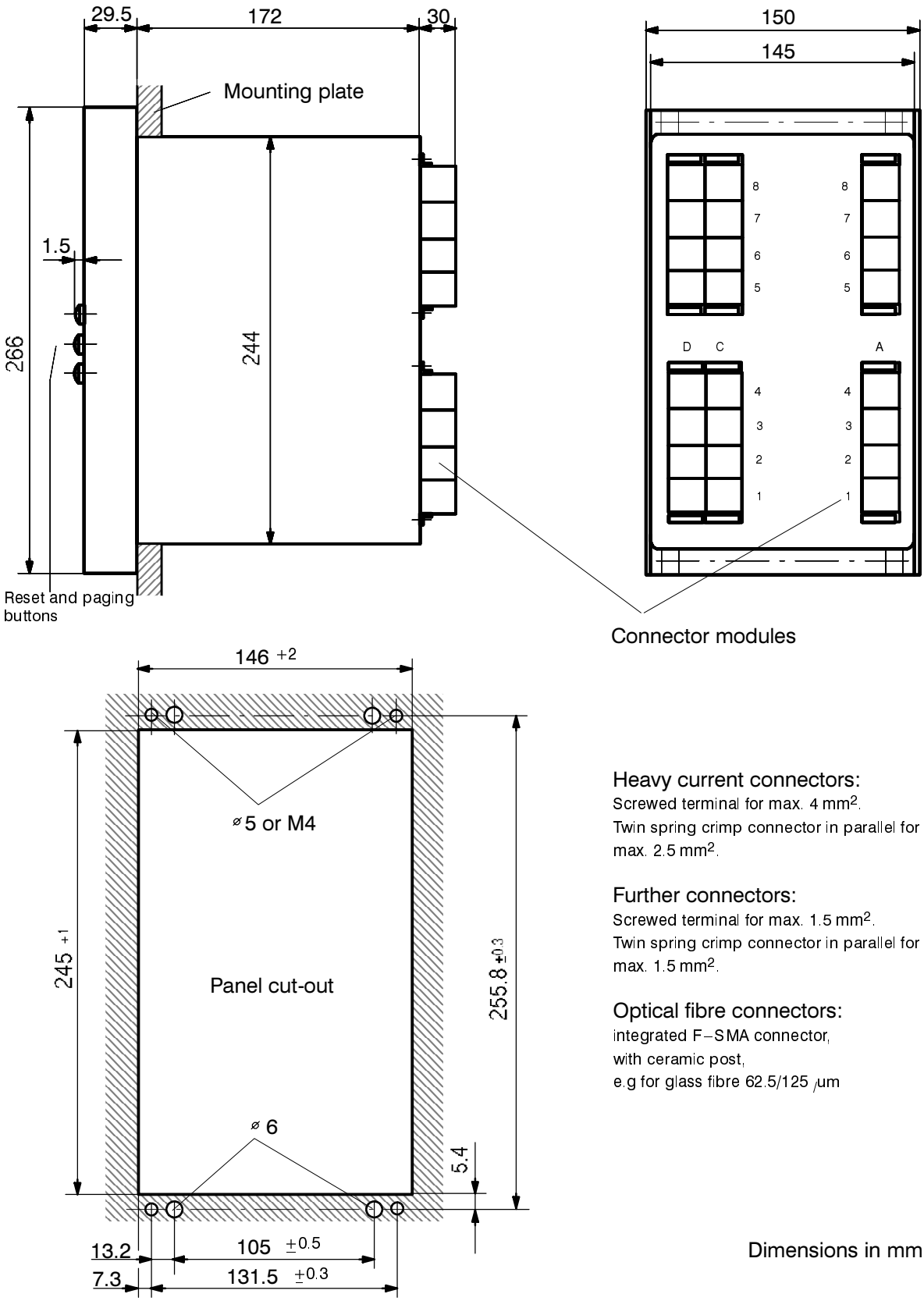

Figure 2.3 Dimensions for housing 7XP2030 – 2 for panel flush mounting or cubicle installation

2.3 Ordering data

Numerical Circuit Breaker Failure Protection

	7.		8.	9.	10.	11.	12.		13.	14.	15.	16.
7 S V 5 1 2		–			A	0		–	0		A	0

Rated current; rated frequency

1 A; 50/60 Hz 1

5 A; 50/60 Hz 5

Auxiliary voltage

24/48 V dc 2

60/110/125 V dc 4

220/250 V dc 5

Construction

in housing 7XP2030 for panel surface mounting . . . . . B

in housing 7XP2030 for panel flush mounting or cubicle installation C

Supplementary annunciation functions

without 0

with real time clock and non-volatile annunciation memories 1

Serial interface for coupling to a control centre

without serial interface . . . . . A

with serial interface for optical fibre connection C

3 Technical data

3.1 General data

3.1.1 Inputs/outputs

Measuring circuits

Rated current I_N		1 A or 5 A
Rated frequency f_N		50 Hz/60 Hz (settable)
Power consumption	current path at I_N = 1 A	approx 0.1 VA per phase and earth current
	current path at I_N = 5 A	approx 0.2 VA per phase and earth current
Overload capability	current path, phases and earth	
– thermal (rms)		100 $\times$ I_N for $\leq$1 s
		20 $\times$ I_N for $\leq$10 s
		4 $\times$ I_N continuous
– dynamic (pulse current)		250 $\times$ I_N one half cycle

Auxiliary voltage

Power supply via integrated dc/dc converter

Rated auxiliary voltage U_H	48/60 Vdc	110/125 Vdc	220/250 Vdc
Permissible variations	38 to 69 Vdc	88 to 144 Vdc	176 to 288 Vdc

Superimposed ac voltage, peak-to-peak		$\leq$ 12 % at rated voltage
		$\leq$ 6 % at limits of admissible voltage
Power consumption	quiescent	approx 6.5 W
	energized	approx 13.5 W
Bridging time during failure/short-circuit of auxiliary voltage		$\geq$ 50 ms at U_{dc} $\geq$ 110 Vdc

Heavy duty (command) contacts

Command (trip) relays, number		5
Contacts per relay		2 NO
Switching capacity	MAKE	1000 W/VA
	BREAK	30 W/VA
Switching voltage		250 V
Permissible current		5 A continuous
		30 A for 0.5 s

Signal contacts

Signal/alarm relays	8
Contact per relay	1 CO or 1 NO
Switching capacityMAKE/BREAK	20 W/VA
Switching voltage	250 V
Permissible current	1 A

Binary inputs

Number	10
Operating voltage	24 to 250 Vdc
Current consumption, energized	approx 1.7 mA, independent of operating voltage

Serial interfaces

Operator terminal interface	non-isolated
– Connection	at the front, 25-pole subminiature connector acc. ISO 2110 for connection of a personal computer or similar
– Transmission speed	as delivered 1200 Baud min 1200 Baud, max 19200 Baud
Interface for data transfer to a control centre	optical fibre connection
– Standards	protocol according to DIN 19244
– Transmission speed	as delivered 9600 Baud min 4800 Baud, max 19200 Baud
– Transmission security	Hamming distance d = 4
– Connection optical fibre	integrated F–SMA connector for direct optical fibre connection, with ceramic post, e.g. glass fibre 62.5/125 µm for flush mounted housing: at the rear for surface mounted housing: on the bottom cover
Optical wave length	820 nm
Permissible line attenuation	max 8 dB
Transmission distance	max 1.5 km
Normal signal position	reconnectable; factory setting: “light off”

3.1.2 Electrical tests

Insulation tests	
Standards:	IEC 60255–5
– High voltage test (routine test) except d.c. voltage supply input	2 kV (rms); 50 Hz
– High voltage test (routine test) only d.c. voltage supply input	2.8 kV dc
– Impulse voltage test (type test) all circuits, class III	5 kV (peak); 1.2/50 µs; 0.5 J; 3 positive and 3 negative shots at intervals of 5 s
EMC tests; immunity (type tests)	
Standards:	IEC 60255–6, IEC 60255–22 (product standards) EN 50082–2 (generic standard) VDE 0435 /part 303
– High frequency IEC 60255–22–1, class III	2.5 kV (peak); 1 MHz; τ =15 µs; 400 shots/s; duration 2 s
– Electrostatic discharge IEC 60255–22–2 class III and IEC 61000–4–2, class III	4 kV/6 kV contact discharge; 8 kV air discharge; both polarities; 150 pF; R_i = 330 Ω
– Radio-frequency electromagnetic field, non-modulated; IEC 60255–22–3 (report) class III	10 V/m; 27 MHz to 500 MHz
– Radio-frequency electromagnetic field, amplitude modulated; IEC 61000–4–3, class III	10 V/m; 80 MHz to 1000 MHz; 80 % AM; 1 kHz
– Radio-frequency electromagnetic field, pulse modulated; IEC 61000–4–3/ENV 50204, class III	10 V/m; 900 MHz; repetition frequency 200 Hz; duty cycle 50 %
– Fast transients IEC 60255–22–4 and IEC 61000–4–4, class III	2 kV; 5/50 ns; 5 kHz; burst length 15 ms; repetition rate 300 ms; both polarities; R_i = 50 Ω; duration 1 min
– Conducted disturbances induced by radio-frequency fields, amplitude modulated IEC 61000–4–6, class III	10 V; 150 kHz to 80 MHz; 80 % AM; 1 kHz
– Power frequency magnetic field IEC 61000–4–8, class IV	30 A/m continuous; 300 A/m for 3 s; 50 Hz
IEC 60255–6	0.5 mT; 50 Hz
EMC tests; emission (type tests)	
Standard:	EN 50081–★ (generic standard)
– Conducted interference voltage, aux. voltage CISPR 22, EN 55022, class B	150 kHz to 30 MHz
– Interference field strength CISPR 11, EN 55011, class A	30 MHz to 1000 MHz

3.1.3 Mechanical stress tests

Vibration and shock during operation

Standards:	IEC 60255 – 21 and IEC 60068 – 2
– Vibration IEC 60255 – 21 – 1, class 1 IEC 60068 – 2 – 6	sinusoidal 10 Hz to 60 Hz: ± 0.035 mm amplitude; 60 Hz to 150 Hz: 0.5 g acceleration sweep rate 1 octave/min 20 cycles in 3 orthogonal axes
– Shock IEC 60255 – 21 – 2, class 1	half sine acceleration 5 g, duration 11 ms, 3 shocks in each direction of 3 orthogonal axes
– Seismic vibration IEC 60255 – 21 – 3, class 1 IEC 60068 – 3 – 3	sinusoidal 1 Hz to 8 Hz: ± 3.5 mm amplitude (hor. axis) 1 Hz to 8 Hz: ± 1.5 mm amplitude (vert. axis) 8 Hz to 35 Hz: 1 g acceleration (hor. axis) 8 Hz to 35 Hz: 0.5 g acceleration (vert. axis) sweep rate 1 octave/min 1 cycle in 3 orthogonal axes

Vibration and shock during transport

Standards:	IEC 60255 – 21 and IEC 60068 – 2
– Vibration IEC 60255 – 21 – 1, class 2 IEC 60068 – 2 – 6	sinusoidal 5 Hz to 8 Hz: ± 7.5 mm amplitude; 8 Hz to 150 Hz: 2 g acceleration sweep rate 1 octave/min 20 cycles in 3 orthogonal axes
– Shock IEC 60255 – 21 – 2, class 1 IEC 60068 – 2 – 27	half sine acceleration 15 g, duration 11 ms, 3 shocks in each direction of 3 orthogonal axes
– Continuous shock IEC 60255 – 21 – 2, class 1 IEC 60068 – 2 – 29	half sine acceleration 10 g, duration 16 ms, 1000 shocks each direction of 3 orthogonal axes

3.1.4 Climatic stress tests

– recommended temperature during service	−5 °C to +55 °C	(> 55 °C decreased display contrast)
– permissible temperature during service	−20 °C to +70 °C	
permissible temperature during storage	−25 °C to +55 °C	
permissible temperature during transport	−25 °C to +70 °C	
Storage and transport with standard works packaging!		
– Permissible humidity	mean value per year $\leq$ 75 % relative humidity; on 30 days per year 95 % relative humidity; condensation not permissible!	

We recommend that all units are installed such that they are not subjected to direct sunlight, nor to large temperature fluctuations which may give rise to condensation.

3.1.5 Service conditions

The relay is designed for use in industrial environment, for installation in standard relay rooms and compartments so that with proper installation **electro-magnetic compatibility (EMC)** is ensured. The following should also be heeded:

- All contactors and relays which operate in the same cubicle or on the same relay panel as the digital protection equipment should, as a rule, be fitted with suitable spike quenching elements.
- All external connection leads in sub-stations from 100 kV upwards should be screened with a screen capable of carrying power currents and earthed at both sides. No special measures are normally necessary for sub-stations of lower voltages.
- It is not permissible to withdraw or insert individual modules under voltage. In the withdrawn condition, some components are electrostatically endangered; during handling the standards for electrostatically endangered components must be observed. The modules are not endangered when plugged in.

WARNING! The relay is not designed for use in residential, commercial or light-industrial environment as defined in EN 50081.

3.1.6 Design

Housing	7XP20; refer Section 2.1
Dimensions	refer Section 2.2
Weight (mass)	
– in housing for surface mounting	approx 11.0 kg
– in housing for flush mounting	approx 9.5 kg
Degree of protection acc. to EN 60529	
– Housing	IP 51
– Terminals	IP 21

3.2 Circuit breaker failure protection

Breaker supervision	
Current detection setting range	0.05 I_N to 4.00 I_N (steps 0.01 I_N)
drop-off ratio	approx. 0.9
tolerance	0.01 · I_N or 5 % of set value
Supervision via breaker auxiliary contacts with three-pole control with single-pole control	 1 input for breaker auxiliary contact 1 input for each pole or 1 input for parallel connection and 1 input for series connection of the breaker auxiliary contacts

Note: The breaker failure protection can operate even without the mentioned breaker auxiliary contacts but with reduced scope of functions. The auxiliary contacts are necessary for

Breaker failure protection after a trip without or with insufficient current flow (e.g. Buchholz protection),	end fault protection, pole discrepancy supervision.

Initiation conditions	
for breaker failure protection	single-pole trip from feeder protection three-pole trip from feeder protection three-pole trip from bus-bar protection three-pole trip from non-short-circuit protection
Times	
pick-up time	approx. 5 ms with measured quantities present approx. 20 ms after switch-on of meas. quantities
drop-off time with sinusoidal measured quantities	$\leqq$ 10 ms
drop-off time maximum	$\leqq$ 20 ms
delay times for all time stages	0.00 s to 32.00 s (steps 0.01 ms) or ∞
delay time tolerance	1 % of set value or 10 ms

The set times are pure delay times.

3.3 Circuit breaker pole discrepancy supervision

Start criterion	any pole open and any pole closed
Supervision time	0.00 s to 32.00 s (steps 0.01 ms) or ∞
delay time tolerance	1 % of set value or 10 ms

3.4 Ancillary functions

Output of measured values	
Operational values of currents	I_{L1}, I_{L2}, I_{L3}, and I_E (if connected) in A primary and in % I_N
Measuring tolerances	$\leq$ 2 % of rated value
Measured values plausibility checks	
– Sum of currents	phases and earth
Steady-state measured value supervision	
Current unbalance	I_{max}/I_{min} > symmetry factor as long as I > I_{limit}
Fault event data storage	
Storage of annunciations of the last three faults	
Real time clock (optional)	
Resolution for operational annunciations	1 min
Resolution for fault event annunciations	1 ms
Clock module (optional)	DALLAS Type DS 138 – 32k RAMifield TIMEKEEPER Self-discharge time >10 years
Max time deviation	0.01 %
Data storage for fault recording	
Storage period (fault detection = 0 ms), max.	
– for operating interface	–100 ms to +2900 ms at 50 Hz – 83 ms to +2416 ms at 60 Hz
– for LSA interface	– 60 ms to + 600 ms at 50 Hz – 50 ms to + 500 ms at 60 Hz
Sampling rate	1 instantaneous value per ms at 50 Hz 1 instantaneous value per 0.83 ms at 60 Hz

4 Method of operation

4.1 Operation of complete unit

The numerical circuit breaker failure protection 7SV512 is equipped with a powerful and proven 16–bit microprocessor. This provides fully digital processing of all functions from data acquisition of measured values to trip signal output to the circuit breakers.

Figure 4.1 shows the basic structure of the unit.

The transducers of the measured value input section ME transform the currents from the measurement transformers of the switch-gear and match them to the internal processing level of the unit. Apart from galvanic and low-capacitance isolation provided by the input transformers, filters are provided for the suppression of interference. The filters have been optimized with regard to bandwidth and

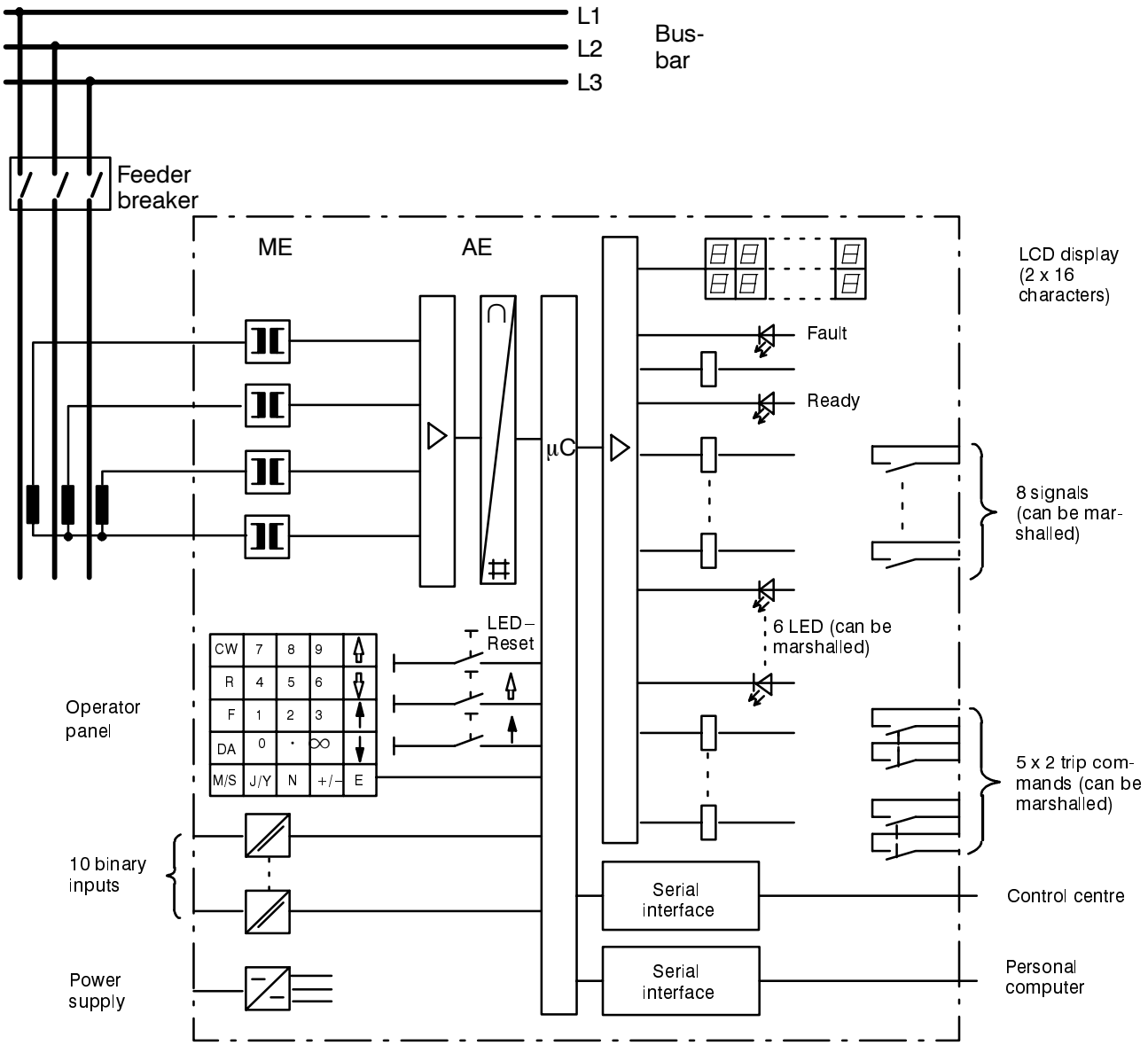

Figure 4.1 Hard-ware structure of the numerical circuit breaker failure protection relay 7SV512

processing speed to suit the measured value processing. The matched analog values are then passed to the analog input section AE.

The analog input section AE contains input amplifiers, sample and hold elements for each input, analog–to–digital converters and memory circuits for the data transfer to the microprocessor.

Apart from control and supervision of the measured values, the microprocessor processes the actual protective functions. These include in particular:

- filtering and formation of the measured quantities,
- continuous interrogation of the binary input which are used for initiation,
- continuous calculation of the currents,
- plausibility checks on the measured currents and the starting conditions,
- scanning of limit values and time sequences,
- decision on trip commands,
- Storage of instantaneous current and voltage values during a fault for analysis.

Binary inputs and outputs to and from the processor are channelled via the input/output elements. From these the processor receives information from the switch-gear (e.g. remote resetting) or from other equipment (e.g. blocking signals). Outputs include, in particular, trip commands to the circuit breakers, signals for remote signalling of important events and conditions as well as visual indicators (LEDs) and an alphanumerical display on the front.

An integrated membrane keyboard in connection with a built-in alphanumerical LCD display enables communication with the unit. All operational data such as setting values, plant data, etc. are entered into the protection from this panel (refer Section 6.3). Using this panel the parameters can be recalled and the relevant data for the evaluation of a fault can be read out after a fault has occurred (refer Section 6.4). The dialog with the relay can be carried out alternatively via the serial interface on the front plate by means of an operator panel or a personal computer.

Via a second serial interface (option), fault data can be transmitted to a central evaluation unit. During healthy operation, measured values (e.g. load currents) can also be transmitted. This second interface is designed for connection of optical fibre links, provided this interface is accordingly ordered (refer Section 2.3 Ordering data).

A power supply unit provides the auxiliary supply on the various voltage levels to the described functional units. +18 V is used for the relay output circuits. The analog input circuits require ±15 V whereas the processor and its immediate peripherals are supplied with +5 V. Transient failures in the supply voltage, up to 50 ms, which may occur during short-circuits in the dc supply system of the plant are bridged by a dc voltage storage element (rated auxiliary voltage $\geq$110 Vdc).

4.2 Circuit breaker failure protection

4.2.1 General

The circuit breaker failure protection provides rapid back-up clearance of fault, in the event that the circuit breaker fails to respond to a trip command from the feeder protection.

Whenever e.g. a short-circuit protection relay of a feeder issues a trip command to the breaker, this is repeated to the circuit breaker failure protection. A timer T–BF in the breaker failure protection is started. The timer runs as long as a tripping command is present and current continues to flow through the breaker poles (Figure 4.2).

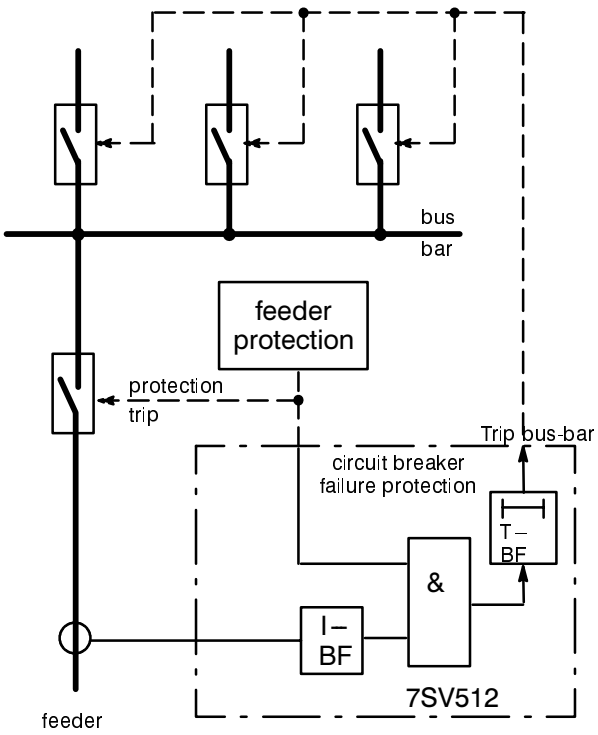

Figure 4.2 Simplified function diagram of circuit breaker failure protection

Normally, the breaker will open and interrupt the fault current. The current monitoring stage quickly resets (typical 10 ms) and stops the timer.

If the tripping command is not carried out (breaker failure case), current continues to flow and the timer runs to its set value. The breaker failure protection then issues a command to trip the back-up breakers and interrupt the fault current.

The reset time of the feeder protection is of no importance because the breaker failure protection itself recognizes the interruption of the current.

For protection relays for which the tripping criteria are not dependant on current (e.g. Buchholz protection), current flow is not a reliable criterion for proper operation of the breaker.

In the such cases, the circuit breaker position can be read from the auxiliary contacts of the breaker. Therefore, instead of monitoring the current, the condition of the auxiliary contacts is monitored. For that purpose, the outputs from the auxiliary contacts must be fed to binary inputs on the relay (refer also Section 4.2.3).

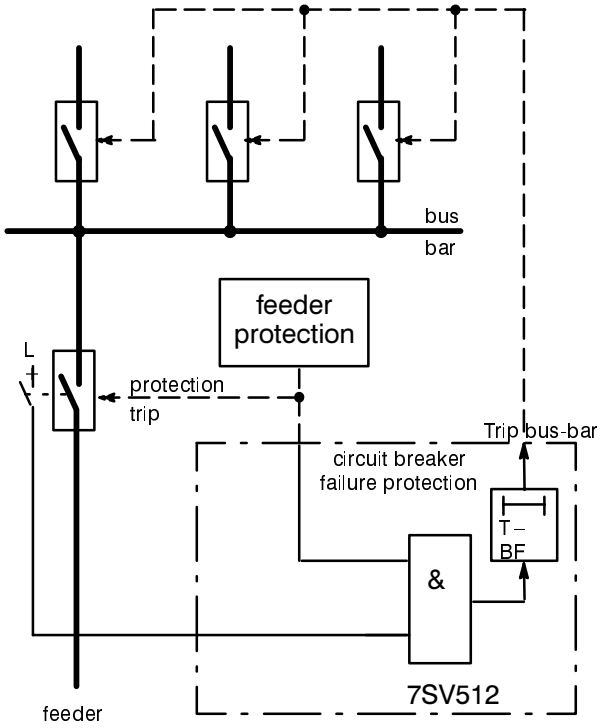

Figure 4.3 Simplified function diagram of circuit breaker failure protection controlled by circuit breaker auxiliary contact

In addition to this basic operation sequence, 7SV512 contains further possibilities which are described in detail in the following sections.

4.2.2 Current flow monitoring

Each of the phase currents and an additional plausibility current (see below) are filtered by two-stage numerical filter algorithms so that only the fundamental frequency is used for further evaluation. The filters are designed such that the occurrence and the disappearance of a sinusoidal current is detected within less than a half a.c. period.

Particular features apply for recognition of the instant of interruption. With sinusoidal currents, current interruption is detected after approx. 5 to 10 ms. With aperiodic d.c. current components in the fault current and after interruption (e.g. with linear current transformers) or if the current transformers are saturated by the d.c. component in the fault current, it can take up to one a.c. cycle, with extreme conditions, before the disappearance of the primary current is reliably detected.

Four currents are monitored and compared with the set threshold. Besides the three phase currents, a fourth current threshold is provided in order to detect a plausibility current, normally the earth current (residual current). This does not have any direct influence on the basic function of the breaker failure protection but it allows a 2-out-of-4 comparison to be made (refer Figure 4.4). This means that the current detection signal L★> associated with a phase current $I_{L★}$ can only be generated when current is present in at least one of the other phases, or an earth (residual) current is detected.

With a phase-to-phase fault, current flows in at least two poles of the breaker; with a single-phase fault, an earth current is always present (residual sum of the phase currents) if only one pole carries current. Thus, on the one hand, detection of the fault current and start of the timer is guaranteed. On the other hand, the 2-out-of-4 logic provides high security against false operation.

Three times the negative sequence current of the symmetrical current components can be taken as plausibility current in case the earth current is not available. This negative sequence current is calculated by 7SV512 (Figure 4.5). The negative sequence current I_2 is calculated according to its definition equation:

$$3 \cdot \underline{I}_2 = \underline{I}_{L1} + \underline{a}^2 \cdot \underline{I}_{L2} + \underline{a} \cdot \underline{I}_{L3}$$

where

$$\underline{a} = e^{j120°}$$

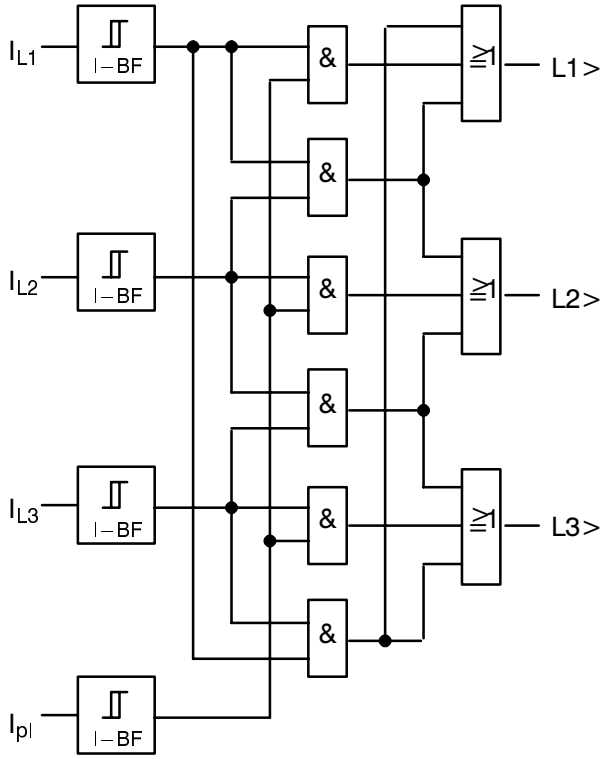

Figure 4.4 Current flow monitoring with 2-out-of-4 check

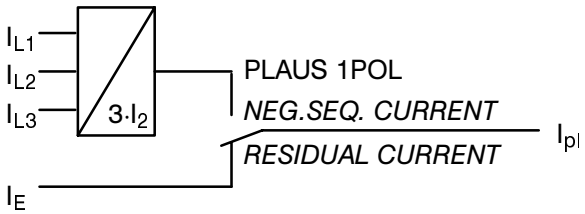

Figure 4.5 Plausibility current

4.2.3 Processing of the circuit breaker auxiliary contacts

Current flow is not a reliable criterion for proper operation of the circuit breaker for faults which do not cause detectable current flow (e.g. Buchholz protection). Information about the position of the circuit breaker auxiliary contacts is required in these cases to check correct response of the circuit breaker. If the breaker poles can be switched individually, information about the position of each individual circuit breaker pole is useful (but not always a precondition).

The relay incorporates a circuit breaker position logic (Figure 4.7), which offers various possibilities, dependent of which auxiliary contacts are available from the circuit breaker and how they are connected to binary inputs of the relay.

If the circuit breaker is switched only three-pole, its auxiliary contact is connected to a binary input module which is assigned to the input function "`>CB Aux. 1p C`" (BI 20 in Figure 4.7). The remaining inputs in the figure are not used then.

If the circuit breaker poles can be switched individually but only the parallel connected auxiliary contacts are available, then the binary input for this connection must be assigned exclusively to the input function "`>CB Aux. 1p C`" (BI 20 in Figure 4.7). The remaining inputs in the figure are not used then.

If the circuit breaker poles can be switched individually and each individual auxiliary contact is available then it is recommended to connect the auxiliary contact of each individual pole to an individual binary input. This connection allows maximum information to be processed in the relay. The assignment of the binary inputs is as follows:

– auxiliary contact of pole L1 assigned to input function "`>CB Aux. L1`" (BI 16 in Figure 4.7),

– auxiliary contact of pole L2 assigned to input function "`>CB Aux. L2`" (BI 17 in Figure 4.7),

– auxiliary contact of pole L3 assigned to input function "`>CB Aux. L3`" (BI 18 in Figure 4.7).

Binary inputs BI 19 and BI 20 are not used in this case. This connection mode is recommended if the breaker failure protection can be initiated by a feeder protection function which may trip at low-current or no-current conditions and which shall operate in conjunction with single-pole auto-reclosure (e.g. weak-infeed trip with carrier transmission).

If the circuit breaker poles can be switched individually but only two binary inputs can be used, one can connect the parallel connection of one set of auxiliary contacts to a binary input and the series connection to another. The inputs are assigned to the function "`>CB Aux. 1p C`" (BI 20 in Figure 4.7) for the parallel connection and to "`>CB Aux. 3p C`" (BI 19 in Figure 4.7) for the series connection. A single-pole trip command is assumed to be executed, when the series connection is interrupted.

Note that Figure 4.7 shows the total logic for all the connection possibilities. In the actual case a part of the inputs and logic is only used, as described above.

The 8 outputs of the circuit breaker position logic are processed by the protection functions. The output signals are blocked as long as the input signals are not plausible: e.g. a circuit breaker pole cannot be open and closed at the same time.

Evaluation of the breaker auxiliary contacts is carried out in the breaker failure protection function only as long as the current flow monitoring has not picked up. Once the current flow criterion has been detected during trip signal of the protection, the circuit breaker is assumed to be open as soon as the current has disappeared, even when the associated auxiliary contact does not (yet) indicate that the circuit breaker has opened (Figure 4.6). This gives preference to the more reliable current criterion and avoids overfunctioning due to a defect e.g. in the auxiliary contact mechanism or circuit. This interlock feature is provided for each individual phase as well as for three-pole trip; in the latter case the "any pole closed" output as illustrated in Figure 4.7 is decisive for the "CB aux. contact" signal of Figure 4.6.

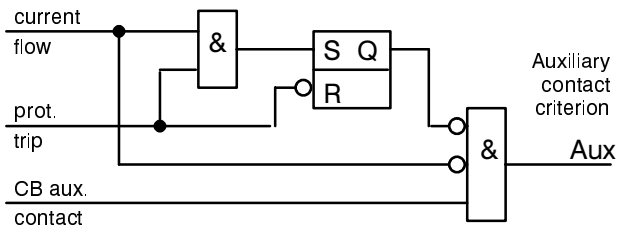

Figure 4.6 Interlock of the auxiliary contact criterion

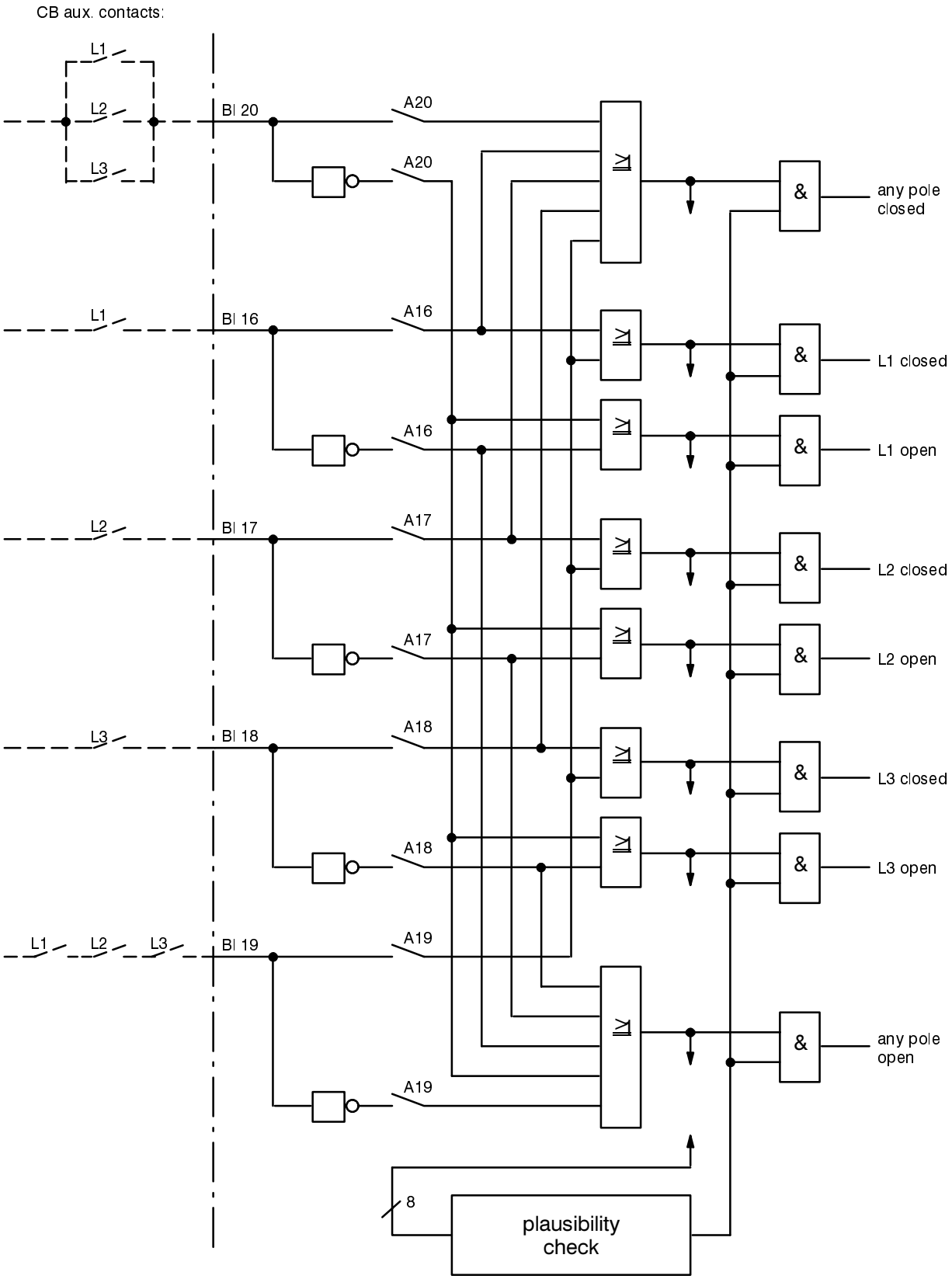

L1, L2, L3 Circuit breaker auxiliary contacts
BI .. Binary input with associated function number
A.. Binary input is assigned to physical input

Figure 4.7 Circuit breaker position logic

4.2.4 Initiation conditions and delay times

Because of the high safety demand for the breaker failure protection, initiation from the main protection must always be performed by energization of at least two binary inputs (dual channel initiation). In addition, special supervisory measures are provided (refer Section 4.2.7).

4.2.4.1 Common phase initiation

Common phase initiation is used, for example, for lines without automatic reclosure (e.g. cables), for lines with only three-pole auto-reclosure (e.g. in overhead line systems without earthed neutral), for transformer feeders, or if the bus-bar protection trips.

For safety reasons, initiation can only be valid when at least two binary inputs are energized. To achieve this, the main protection must deliver at least the three-pole trip command at the input "`>Trip 3 pole`" and an additional fault detection signal at the input "`>Start`". For Buchholz protection it is recommended that the trip command is connected to 7SV512 by two separate wire pairs in order to achieve dual channel initiation of the breaker failure protection.

The function scheme is shown in Figure 4.8. When the initiation conditions are fulfilled and at least one current flow criterion (according Figure 4.4) is present, the delay time T1 – 3POLE is started. After expiry of this time, the trip command "`BFP Trip L123`" is issued.

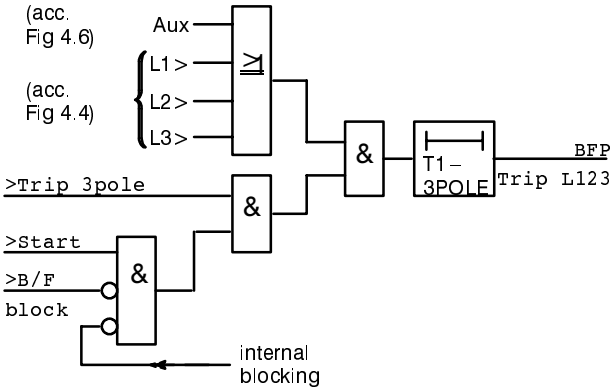

Figure 4.8 Breaker failure protection with common phase initiation

7SV512 provides facility to interrogate the circuit breaker auxiliary contact(s) (according Figure 4.6) in case the current flow criterion is not fulfilled for any of the phases. If the circuit breaker poles can be tripped individually, the parallel connection of the three auxiliary contacts is used (signal "any pole closed" in Figure 4.7), or the OR combined signals "L* closed". The circuit breaker has operated correctly after three-pole trip command only when none of the phases carries current or when all three auxiliary contacts have opened.

Possibility exists to set different delay times dependent on whether the current flow criterion or the auxiliary contact criterion is fulfilled. Thus, e.g. a longer time can be set for the auxiliary contact criterion if the auxiliary contacts could react slower. To achieve this, the delay times T2 are used, i.e. the breaker failure protection operates single-stage with T2; T1 is ineffective. Initiation and current flow criterion cause the time T2 – CURRENT to be started, initiation and auxiliary contact criterion cause the time T2 – CB – AUX to be started (refer Figure 4.9).

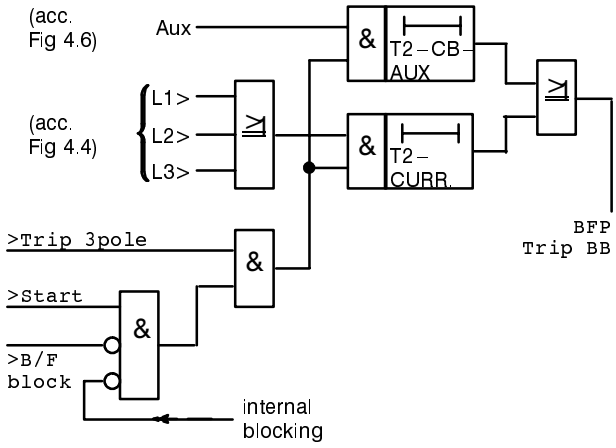

Figure 4.9 Breaker failure protection with common phase initiation

Initiation can be blocked via the binary input "`>B/F block`" (e.g. during test of the feeder protection relay). Additionally, an internal blocking possibility is provided (refer also Section 4.2.7).

4.2.4.2 Two-stage breaker failure protection with common phase initiation

Two-stage protection means that two timers (or sets of timers) with different delay times are started. After expiry of the first stage T1, the trip command of the feeder protection is normally repeated on the feeder circuit breaker, often on a second trip coil (local trip or cross trip), if the breaker has not responded to the original trip command. A second time stage T2 monitors the response to this repeated trip command and trips the breakers of the relevant bus-bar section, if the fault is not yet cleared after this time. A choice can be made whether the two timers are started at the same time or one after the other.

The functional scheme is shown in Figure 4.10. The operation sequence of the first stage is, in principle, the same as that of the single-stage example shown in Figure 4.8 (refer Section 4.2.4.1). After expiry of the time T1 – 3POLE, the trip commands "`BFP Trip L123`" and "`BFP Cross Trip`" are generated which normally repeat the command for the feeder circuit breaker (local trip or cross trip). After expiry of the second time stage, the bus-bar (section) is disconnected by the command "`BFP Trip BB`".

With the second stage, distinction can be made between start by means of the current criterion T2 – CURRENT or by means of the auxiliary contact criterion T2 – CB – AUX. Thus, e.g. a longer time can be set for the auxiliary contact criterion if the auxiliary contacts may react slower.

The parameter switch T – TRIP – BB determines whether the timers T2 can be started only after T1 has expired (times operate in sequence) or whether the timers T2 are started with T1 at the same time (times operate in parallel). The first possibility means that T2 starts with the trip command of the first stage, in the second case both timers start with the initial trip command of the feeder protection.

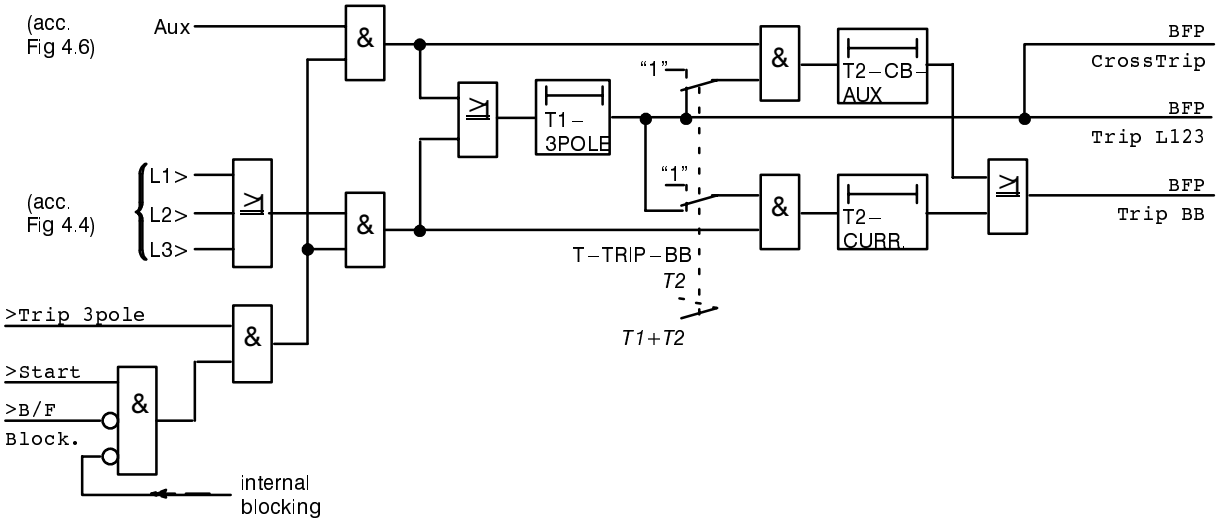

Figure 4.10 Two-stage breaker failure protection with common phase initiation

4.2.4.3 Phase segregated initiation

Phase segregated initiation is necessary if the circuit breaker poles can be switched individually, e.g. if single-pole auto-reclosure is used.

For safety reasons, initiation can only be valid when at least two binary inputs are energized. To achieve this, the main protection must deliver, besides the three single-pole trip commands at the inputs "`>Trip L1`", "`>Trip L2`", and "`>Trip L3`", at least an additional fault detection signal at the input "`>Start`". In addition, earth fault detection can be connected to "`>Start N`".

The initiation logic is shown, in principle, in Figure 4.11, if the feeder protection is able to give phase segregated trip commands. Similar to the logic of current flow monitoring (Section 4.2.2), a 2-out-of-4 logic is used. That means, that initiation of a phase is valid only when at least a trip command of another phase is present, or an earth fault is detected ("`>Start N`"). Additional safety is achieved in that the general fault detection signal of the feeder protection is required. In case the feeder protection relay does not output the earth fault detection, it can be omitted; the fault detection signal "`>Start`" ensures, nevertheless, dual channel processing of the trip criteria in any case.

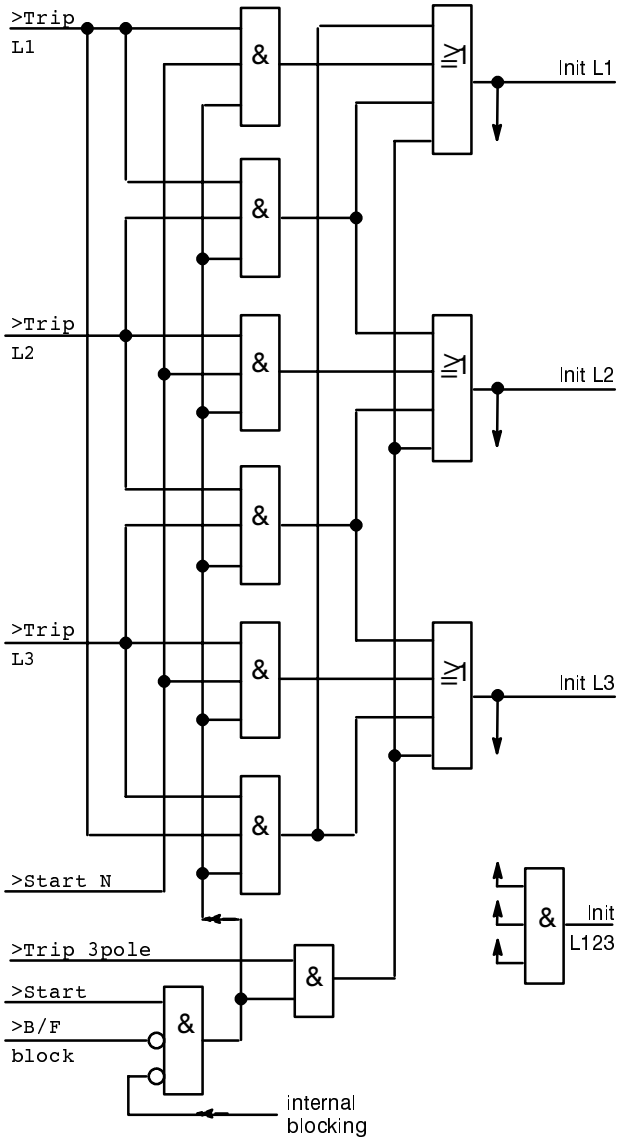

Figure 4.11 Initiation conditions with 2-out-of-4 logic

Initiation can be blocked via the binary input “>B/F block” (e.g. during test of the feeder protection relay). Additionally, an internal blocking facility is provided (refer also Section 4.2.7).

The logic of the start conditions for the delay times is shown in Figure 4.12. In principle, it is designed like that for common phase initiation, but, individual for each of the three phases. Thus, current flow and initiation conditions are processed for each phase. In case of single-pole interruption during an auto-reclose cycle, current disappearance is reliably monitored only for the tripped breaker pole.

The auxiliary contact criterion is processed for each individual breaker pole, too. But, if the breaker auxiliary contacts are not available for each individual breaker pole, then a single pole trip command is assumed to be executed only when the series connection of the auxiliary contacts is interrupted (i.e. the signal “any pole open” according Figure 4.7 is present, refer Section 4.2.3).

For the first breaker failure protection stage, a different delay time T1 – 1POLE can be set for single-pole trip by the feeder protection. In addition, a choice can be made whether expiry of the time T1 – 1POLE should result in a phase-true single-pole trip (parameter TRIP 1POLE = *YES,* command output “BFP Trip L1”) or in a three-pole trip (parameter TRIP 1 POLE = *NO*, command output “BFP CrossTrip”) by the breaker failure protection.

With the second stage, distinction can be made again between start by means of the current criterion (“L1>” according Figure 4.4) or by means of the auxiliary contact criterion (“Aux L1” according to Figure 4.6, for the assigned phase).

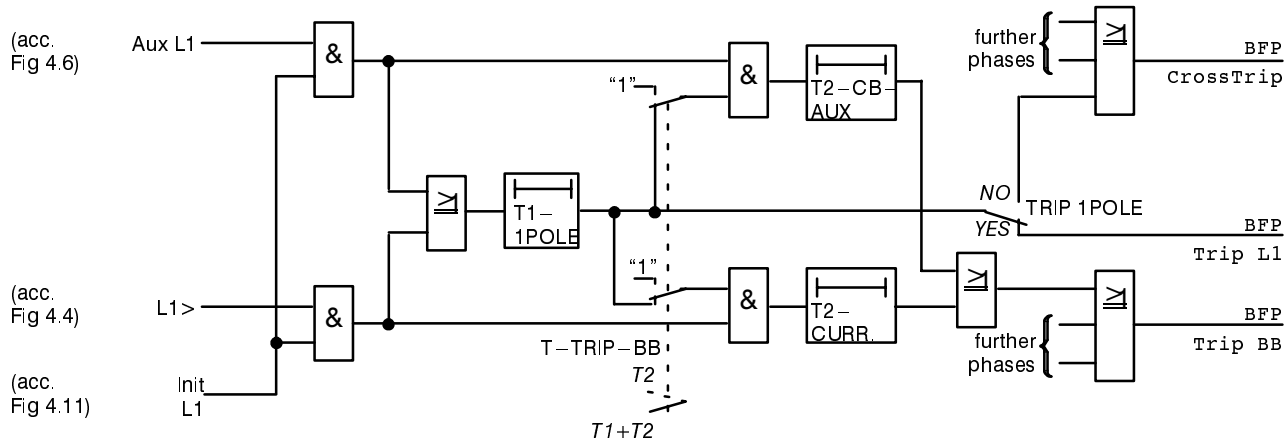

Figure 4.12 Two-stage breaker failure protection with phase segregated initiation – one phase

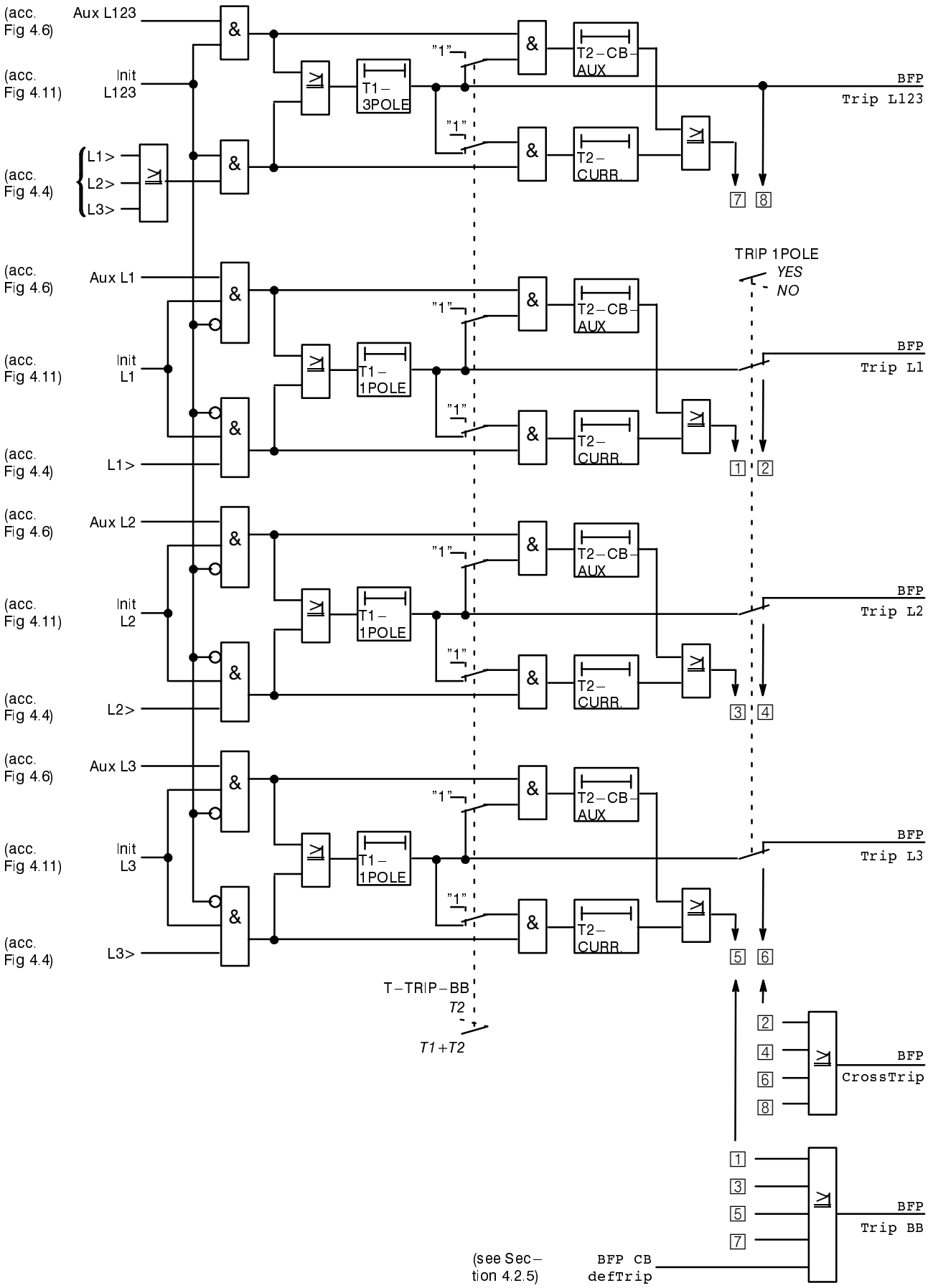

Figure 4.13 Cooperation of the initiation conditions and delay timers

4.2.4.4 Combined initiation conditions

The conditions of initiation and circuit breaker pole monitoring can be combined at will. Figure 4.13 shows the total logic.

The essential components of the total logic are explained in the foregoing subsections. In addition, the figure shows interlocking of the phase segregated stages by the common phase stage: If a three-pole trip occurred by the main protection, only the time stage for three-pole trip shall operate, the phase-segregated stages are blocked.

4.2.4.5 Function examples

Assuming an overhead line feeder where single-pole auto-reclose is used. The three phase segregated trip commands of the short-circuit protection are then fed to the three binary inputs (refer Figure 4.11) "`>Trip L1`", "`>Trip L2`", and "`>Trip L3`", the general fault detection signal to the input "`>Start`". If available , the earth fault detection signal is connected to "`>Start N`". The 2-out-of-4 logic produces the (internal) signals "Init L1", "Init L2", and "Init L3", and/or "Init L123".

Current flow is monitored according Figure 4.4. As long as the current flow criterion of the associated phase is fulfilled, the time T1 – 1POLE (Figure 4.12 or 4.13) continues in case of single-pole trip: in case of three-pole trip the time T1 – 3POLE continues as long as either of the current flow criteria (Figure 4.4) is fulfilled (Figure 4.10 or 4.13).

As soon as the breaker (pole) has opened the current flow criteria disappear very fast, and all functions reset to the quiescent state.

If the current(s) have not been interrupted until expiry of the time T1 – POLE or T1 – 3POLE, trip command "`BFP Trip L*`" (for the associated pole *) Figure 4.12 or 4.13), or "`BFP Trip L123`" (three-pole) (Figure 4.10 or 4.13), is generated. This command trips e.g. a second (set of) trip coil of the feeder circuit breaker. At the same time the second time stage T2 – CURRENT starts.

If current flow is even recognized after expiry of T2 – CURRENT, bus-bar trip command "`BFB Trip BB`" is generated (Figure 4.10 or 4.12 or 4.13), which will isolate the bus-bar (section).

Assuming a transformer feeder. The trip command of the short-circuit protection is then fed to the binary input "`>Trip 3pole`", the fault detection signal to "`>Start`" (Figure 4.11). If the short-circuit protection does not provide a fault detection signal (e.g. differential protection), its trip signal is connected to both mentioned binary inputs.

Current flow is monitored according Figure 4.4. As long as the current flow criterion is fulfilled for at least one phase, the time T1 – 3POLE (Figure 4.10 or 4.13) continues running.

As soon as the breaker has opened the current flow criteria disappear very fast, and all functions reset to the quiescent state.

If not all currents have been interrupted until expiry of the time T1 – 3 POLE, trip command "`BFP Trip L123`" (Figure 4.10 or 4.13) is generated. This command trips e.g. a second trip coil of the feeder circuit breaker. At the same time the second time stage T2 – CURRENT starts.

If current flow is even recognized after expiry of T2 – CURRENT, bus-bar trip command "`BFP Trip BB`" is generated (Figure 4.10 or 4.13), which will isolate the bus-bar (section).

The trip command of the Buchholz protection is equally fed to the binary input "`>Trip 3pole`" (Figure 4.10 or 4.13). In order to ensure dual channel control of initiation of the breaker failure protection, the same Buchholz trip command is fed also to the input "`>Start`".

Trip command of the Buchholz protection is not necessarily combined with a detectable current flow. The breaker failure protection automatically recognizes when current flow is not a reliable criterion for the reaction of the circuit breaker and will switch over to breaker auxiliary contact monitoring (Figure 4.7 and 4.6). The time T1 – 3POLE (Figure 4.10 or 4.13) continues running as long as at least one circuit breaker auxiliary contact is closed (Parallel connection of the auxiliary contact).

As soon as all three breaker poles have opened, the auxiliary contact criterion disappears, and all functions reset to the quiescent state.

If not all three breaker poles have opened until expiry of the time T1 – 3POLE, trip command "`BFP Trip L123`" (Figure 4.10 or 4.13) is generated. This command trips e.g. a second trip coil of the feeder circuit breaker. At the same time the second time stage T2 – CB – AUX starts.

If not all three circuit breaker poles have opened even after expiry of T2 – CB – AUX, bus-bar trip command "`BFP Trip BB`" is generated (Figure 4.10 or 4.13), which will isolate the bus-bar (section).

4.2.5 Circuit breaker not fully operational

There may be cases when it is already clear that the circuit breaker associated with a feeder protection relay cannot clear a fault, e.g. when the tripping voltage or the tripping energy is not available.

In such a case it is not necessary to wait for reaction of the feeder circuit breaker. If provision has been made for such a condition to be indicated (e.g. control voltage monitor or air pressure monitor), the monitor alarm signal can be fed to the binary input "`>CB defect`" of the 7SV512. On occurrence of this alarm and trip command of the feeder protection, a separate timer T3–BR–DEF is started (Figure 4.14), which is normally set to 0. Thus, the neighbouring circuit breakers (bus-bar) are tripped immediately in case the feeder circuit breaker is not operational.

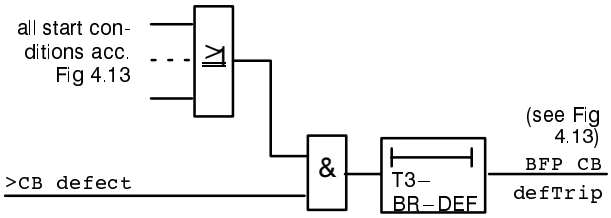

Figure 4.14 Circuit breaker defective

4.2.6 Transfer trip to the remote end circuit breaker

7SV512 provides facility to give an additional intertrip signal to the circuit breaker of the remote line end in case the local feeder circuit breaker fails. For this, a suitable protection signal transmission link is required (e.g. via communication cable, power line carrier transmission, radio wave transmission, or optical fibre transmission).

The output command "`BFP TransTrip`", which can be allocated to a command output of the device, is suitable to control the transmitter. This command appears always when the bus-bar trip command "`BFP Trip BB`" is generated, i.e. after expiry of the second time stages T2, or at bus-bar trip during defective circuit breaker.

4.2.7 Hardware supervision and blocking

Because of the high safety demand for the breaker failure protection, 7SV512 comprises special monitoring features.

Besides dual channel control with additional release channel, which are usual for all trip relays of Siemens numerical protection relays, a special trip release module is provided for two of the trip relays. This hardware logic module operates independent of the processor system but informs the processor system about its operation. By this means, the processor system on the one hand, and the hardware trip release module on the other hand, can supervise each other.

The trip release module and its surroundings are shown in Figure 4.15. The plug jumpers PI1 to PI5 are shown in the position which is recommended for 7SV512 (factory settings).

The trip release module has three inputs and two outputs. The binary inputs of the device, BI 8, BI 9, and BI 10, are hard-wired with the three inputs of the trip release module. This is why the functions of these binary inputs should remain assigned in the shown manner. The outputs of the module provide additional hardware release signals for the trip relays K1 and K2.

The binary input signals are combined such that three release signals are generated:

$$\text{Rel1} = \text{BI 10} \,\&\, \text{BI 9} \,\&\, \overline{\text{BI 8}}$$

$$\text{Rel0} = \text{BI 10} \,\&\, \text{BI 9} \,\&\, \overline{\text{BI 8}}$$

$$\text{Rel2} = \text{BI 10} \,\&\, \overline{\text{BI 8}}$$

Thus, release signal Rel2 is produced by the general fault detection signal of the main protection at BI 10 as long as no blocking signal is present at BI 8; whereas an additional general trip signal of the main protection must be present at BI 9 for the release conditions Rel1 and Rel0.

The outputs of the trip release module are connected such that Rel1 releases the trip relay K1, and Rel2 releases the trip relay K2. It is assumed that K1 is used for trip command to the bus-bar breakers, K2 is intended for the intertrip signal to the remote line end. The trip signal of the main protection relay is not included for intertrip so that this relay can be used also in case of end fault protection operation (refer Section 4.3).

The remaining trip relay K3 to K5 are not equipped with this special trip release feature. Of course, the dual channel control with additional release transistor which is usual for all trip relays is also valid for K3 to K5.

The correct operation of the trip release module is supervised by the processor system. A choice can be made whether a defect should cause the breaker failure protection to be blocked, and after what time.

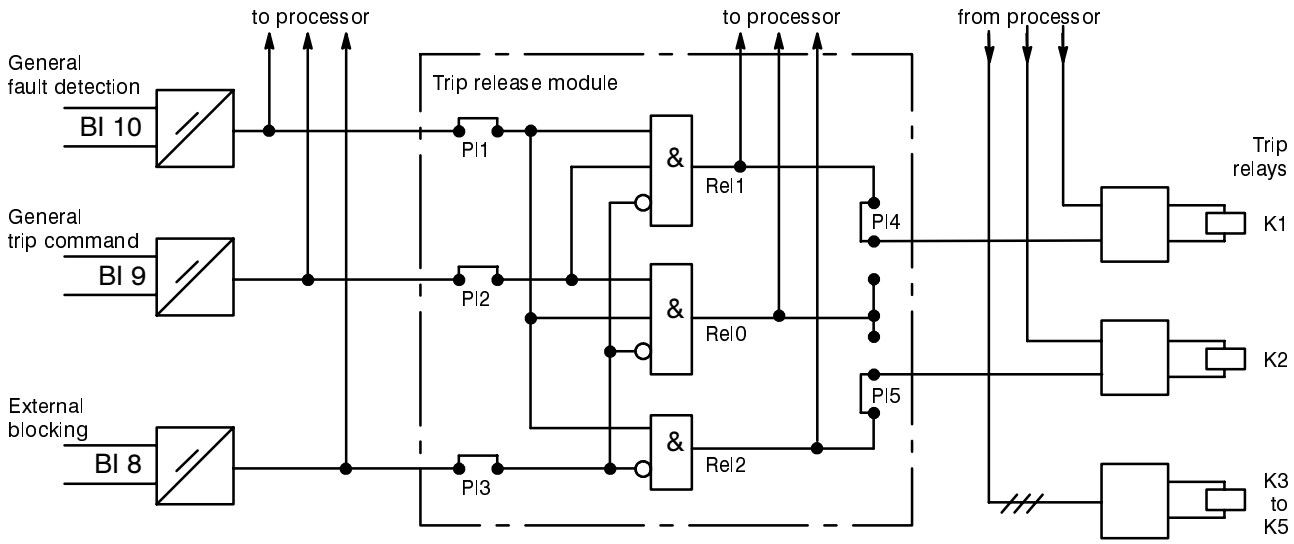

Figure 4.15 Trip release module (hardware module)

When a trip release signal appears without an initiation signal caused by main protection trip, an internal fault must be present. After a (settable) time delay TBLOCK–MON (Figure 4.16), the breaker failure protection can be blocked (parameter BLOCK–MON). Blocking is also effective, when the current sum monitoring ΣI has recognized implausible deviations (refer also Section 4.5.4.1). Note that the current sum monitor can only operate correctly if four currents (three phases and residual current) are fed to the relay from the current transformers.

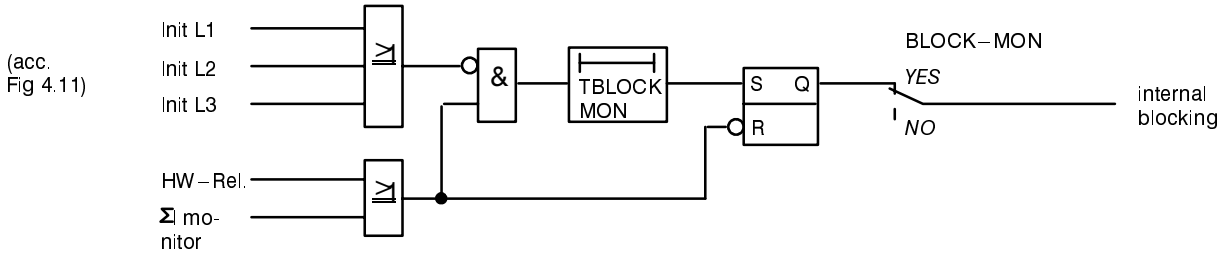

Figure 4.16 Blocking

4.3 End fault protection

An end fault is defined here as a short-circuit which has occurred at the end of a line or protected object, between the circuit breaker and the current transformer set.

This situation is shown in Figure 4.17. The fault is located – as seen from the current transformers (= measurement location) – at the bus-bar side, thus, it will not be regarded by the feeder protection relay as a feeder fault. It can only be detected by either a reverse stage of the feeder protection or by a bus-bar protection. Nevertheless, a trip command given to the feeder circuit breaker cannot clear the fault since it is continued to be fed from the opposite end. Thus, the fault current does not stop flowing even though the feeder circuit breaker has properly responded to the trip command.

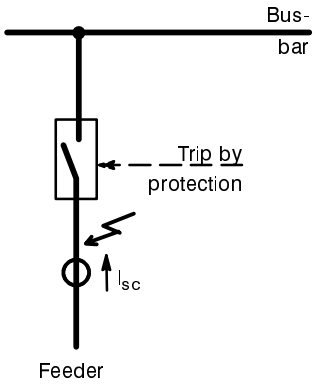

Figure 4.17 End fault between circuit breaker and current transformers

The end fault protection has the task to recognize this situation and to transmit a trip signal to the remote line end to stop this situation. For this, a transmission channel is required (e.g. power line carrier, radio wave, or optical fibre).

The end fault is detected by the end fault protection using the following logic: The end fault is recognized when the current continues flowing although the circuit breaker auxiliary contacts indicate that the breaker is open. In 7SV512, an additional criterion is the presence of a fault detection signal from the feeder protection relay. The function scheme is shown in Figure 4.18. If the feeder protection has picked up and current flow is recognized (current criteria “L*>” according Section 4.2.2, see Figure 4.4), but no circuit breaker pole is closed (auxiliary contact criterion “any pole closed” according Section 4.2.3, see Figure 4.7), then a timer T – END – FLT is started, after which an intertrip signal “`BFP TransTrip`” is transmitted to the opposite line end.

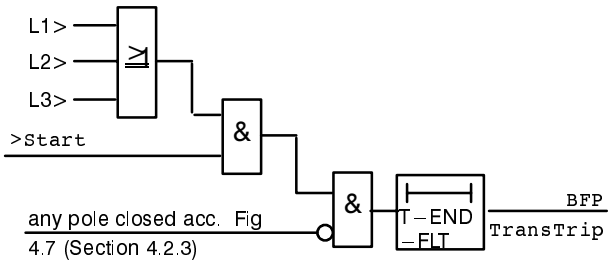

Figure 4.18 Function scheme of end fault protection

4.4 Circuit breaker pole discrepancy supervision

This function has the task to detect discrepancies in the position of the three circuit breaker poles. Under steady-state conditions, either all three poles of the breaker must be closed, or all three poles must be open. Discrepancy is permitted only for a short time interval during a single-pole auto-reclose cycle.

The function scheme is shown in Figure 4.19. The signals which are processed here had already been used for the breaker failure protection. Condition for pole discrepancy is that at least one pole is closed (“any pole closed” from Figure 4.7, refer Section 4.2.3), and that not all poles are closed (“any pole open” from Figure 4.7, refer Section 4.2.3). In addition, current flow is interrogated (from Figure 4.4, refer to Section 4.2.2).

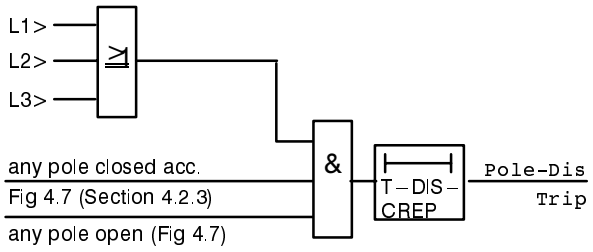

Figure 4.19 Function scheme of pole discrepancy supervision

4.5 Ancillary functions

The ancillary functions of the circuit breaker failure protection 7SV512 include:

– Processing of annunciations,

– Storage of short circuit data for fault recording,

– Operational measurements and testing routines,

– Monitoring functions.

4.5.1 Processing of annunciations

After a fault in the network system, information concerning the response of the protective device and knowledge of the measured values are of importance for an exact analysis of the history of the fault. For this purpose the device provides annunciation processing which is effective in three directions.

4.5.1.1 Indicators and binary outputs (signal relays)

Important events and conditions are indicated by optical indicators (LED) on the front plate. The module also contains signal relays for remote signalling. Most of the signals and indications can be marshalled, i.e. they can be allocated meanings other than the factory settings. In Section 5.5 the delivered condition and the marshalling facilities are described in detail.

The output signal relays are not latched and automatically reset as soon as the originating signal disappears. The LEDs can be arranged to latch or to be self-resetting.

The memories of the LEDs can be safe against supply voltage failure. They can be reset:

– locally, by operation of the reset button on the relay,

– remotely by energization of the remote reset input,

– automatically, on occurrence of a new general pick-up signal.

Some indicators and relays indicate conditions; it is not appropriate that these should be stored. Equally they cannot be reset until the originating criterion has been removed. This mainly concerns fault indications such as “auxiliary voltage fault”, etc.

A green LED indicates readiness for operation. This LED cannot be reset and remains illuminated when the microprocessor is working correctly and the unit is not faulty. The LED extinguishes when the self-checking function of the microprocessor detects a fault or when the auxiliary voltage is absent.

With the auxiliary voltage present but with an existing internal fault in the unit, a red LED illuminates (“Blocked”) and blocks the unit.

4.5.1.2 Information on the display panel or to a personal computer

Events and conditions can be read off in the display on the front plate of the device. Additionally, a personal computer, for example, can be connected via the operation interface, and all the informations can then be sent to it.

In the quiescent state, i.e. as long as no network faults are present, the display outputs selectable operating information (usually an operational measured value) in each of the two lines. In the event of a network fault, selectable information on the fault appears instead of the operating information, e.g. detected phase(s) and elapsed time from fault detection to trip command. The quiescent information is displayed again once these fault annunciations have been acknowledged. The acknowledgement is identical to resetting of the stored LED displays as in Section 4.5.1.1.

The device also has several event buffers, e.g. for operating messages, circuit breaker operation statistics etc. (refer Section 6.4) which can be saved against supply voltage failure by a buffer battery. These messages, as well as all available operating values, can be transferred into the front display at any time using the keyboard or to the personal computer via the operating interface.

After a fault, for example, important information concerning its history, such as pick-up and tripping, can be called up on the display of the device.

The fault inception is indicated with the absolute time of the operating system. The sequence of the events is tagged with the relative time referred to the moment at which the fault detector has picked up. Thus, the elapsed time until tripping is initiated and until the trip signal is reset can be read out. The resolution is 1 ms.

The events can also be read out with a personal computer by means of the appropriate program DIGSI®. This provides the comfort of a CRT screen and menu-guided operation. Additionally, the data can be documented on a printer or stored on a floppy disc for evaluation elsewhere.

The protection device stores the data of the last three network faults; if a fourth fault occurs the oldest fault is overwritten in the fault memory.

A network fault begins with recognition of the fault by pick-up and ends with fault detector reset.

4.5.1.3 **Information to a central unit** (optional)

All stored information can be transmitted via an optical fibre connector (optional) to a control centre, for example, the SIEMENS Localized Substation Automation System LSA 678. Transmission uses a standardized transmission protocol according to DIN 19244.

4.5.2 Data storage and transmission for fault recording

The instantaneous values of the measured values

i_{L1}, i_{L2}, i_{L3}, i_E

are sampled at 1 ms intervals (for 50 Hz) and stored in a circulating shift register. In case of a fault, the data from 5 cycles before the occurrence of the fault up until 5 cycles after the end of the network fault are stored, max. over 3 seconds. These data are then available for fault analysis. For each renewed network fault, the actual new fault data are stored without acknowledgement of the old data.

The data can be transferred to a connected personal computer via the operation interface at the front and evaluated by the protection data evaluation program DIGSI®. The currents are referred to their maximum values, normalized to their rated values and prepared for graphic visualization. In addition, the signals “Pick-up”, “Trip” and “Drop-off” are marked on the fault record.

Alternatively, the fault record data can be transmitted to a control centre via the serial interface (if fitted). In this case data are stored from 3 periods before to 30 periods after pick-up of the device. Evaluation of the data is made in the control centre, using appropriate software programs. The currents are referred to their maximum values, normalized to their rated values and prepared for graphic visualization. In addition, the signals “Pick-up”, “Trip” and “Drop-off” are marked on the fault record.

When the data are transferred to a central unit, readout can proceed automatically, optionally after each pick-up of the relay or after an instantaneous trip. The following then applies:

– The relay signals the availability of fault record data,

– The data remain available for recall until commencement of the next fault event.

– A transmission in progress can be aborted by the central unit.

4.5.3 Operating measurements and conversion

For local recall or transmission of data, the true rms values of the measured currents are always available.

The following is valid:

– I_{L1}, I_{L2}, I_{L3} Phase currents in amps primary and in % of rated current

– I_E Earth current in amps primary and in % of rated current

4.5.4 Monitoring functions

The device incorporates comprehensive monitoring functions which cover both hardware and software; furthermore, the measured values are continuously checked for plausibility so that the current transformer circuits are also included in the monitoring system.

4.5.4.1 Hardware monitoring

Because of the high safety demand for the breaker failure protection, a special hardware trip release module is incorporated in 7SV512. This is described in conjunction with the breaker failure protection function in Section 4.2.7. In addition, the general monitoring functions of numerical protection and automation relays are present:

The complete hardware is monitored for faults and inadmissible functions, from the measured value inputs to the output relays. In detail this is accomplished by monitoring:

– Auxiliary and reference voltages

  The processor monitors the offset and reference voltage of the ADC (analog/digital converter). The protection is blocked as soon as impermissible deviations occur. Permanent faults are annunciated.

  Failure or switch-off of the auxiliary voltage automatically puts the system out of operation; this status is indicated by a fail-safe contact. Transient dips in supply voltage of less than 50 ms will not disturb the function of the relay.

– Measured value acquisition

  The complete chain, from the input transformers up to and including the analog/digital converters are monitored by the plausibility check of the measured values.

  In the current path, there are four input converters; the digitized sum of the outputs of these must always be zero. A fault in the current path is recognized when

$$|i_{L1} + i_{L2} + i_{L3} + k_I \times i_E| \geq \text{SUM.Ithres} \times I_N + \text{SUM.Fact.I} \times I_{max}$$

An adjustable factor k_I (parameter Ie/Iph) can be set to correct the different ratios of phase and earth current transformers (e.g. summation transformer). If the residual earth current is derived from the current transformer starpoint, $k_I = 1$. SUM.Ithres and SUM.Fact.I are setting parameters (refer to Section 6.3.6). The component SUM.Fact.I x I_{max} takes into account permissible current proportional transformation errors in the input converters which may particularly occur under conditions of high short circuit currents (Figure 4.20).

Note: Current sum monitoring can operate properly only when the residual current of the protected object is fed to the I_E input of the relay.

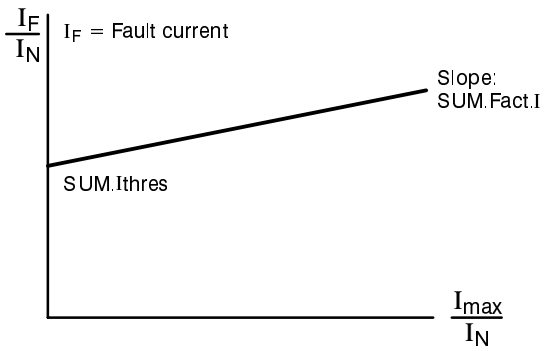

Figure 4.20 Current sum monitoring (current plausibility check)

– Command output channels:

  The command relays for tripping are controlled by two command and one additional release channels. As long as no pick-up condition exists, the central processor makes a cyclic check of these command output channel for availability, by exciting each channel one after the other and checking for change in the output signal level. Change of the feed-back signal to low level indicates a fault in one of the control channels or in the relay coil. Such a condition leads automatically to alarm and blocking of the command output. In addition, a trip release module as described in Section 4.2.7 is effective for trip relays K1 and K2.

– Memory modules:

  The memory modules are periodically checked for fault by:

  - Writing a data bit pattern for the working memory (RAM) and reading it,

- Formation of the modulus for the program memory (EPROM) and comparison of it with a reference program modulus stored there,
- Formation of the modulus of the values stored in the parameter store (EEPROM) then comparing it with the newly determined modulus after each parameter assignment process.

4.5.4.2 Software monitoring

For continuous monitoring of the program sequences, a watchdog timer is provided which will reset the processor in the event of processor failure or if a program falls out of step. Further, internal plausibility checks ensure that any fault in processing of the programs, caused by interference, will be recognized. Such faults lead to reset and restart of the processor system.

If such a fault is not eliminated by restarting, further restarts are initiated. If the fault is still present after three restart attempts within 30 s the protective system will switch itself out of service and indicate this condition by drop-off of the availability relay, thus indicating “equipment fault” and simultaneously the LED “Blocked” comes on.

4.5.4.3 Monitoring of external measuring transformer circuits

To detect interruptions or short circuits in the external measuring transformer circuits or faults in the connections (an important commissioning aid) the measured values are checked at cyclic intervals, as long as no pick-up condition exists:

– Current symmetry

In healthy operation it can be expected that the currents will be approximately symmetrical. The following applies:

$$|I_{min}| / |I_{max}| < \text{SYM.Fact.I}$$

if

$$I_{max} / I_N > \text{SYM.Ithres} / I_N$$

I_{max} is always the largest of the three phase currents and I_{min} always the smallest. The symmetry factor SYM.Fact.I represents the magnitude of asymmetry of the phase currents, and the threshold SYM.Ithres is the lower limit of the processing area of this monitoring function (see Figure 4.21). Both parameters can be set (see Section 6.3.6).

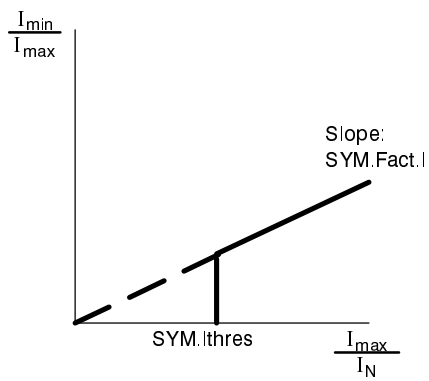

Figure 4.21 Current symmetry monitoring

Table 4.1 gives a survey of all the functions of the measured value monitoring system.

Monitoring	Failure covered, reaction
1. Plausibility check of currents $\lvert i_{L1} + i_{L2} + i_{L3} + k_I \times i_E \rvert \geq$ **SUM.Ithres** x I_N + **SUM.Fact.I** x I_{max}	Relay failures in the signal acquisition circuits i_{L1}, i_{L2}, i_{L3}, i_E delayed alarm “`Failure ΣI`”, optionally blocking
2. Current unbalance $\frac{\lvert I_{min} \rvert}{\lvert I_{max} \rvert} <$ **SYM.Fact.I** and $\lvert I_{max} \rvert >$ **SYM.Ithres**	Single, or phase-to-phase short circuits or broken conductors in the c.t. circuits i_{L1}, i_{L2}, i_{L3} or Unbalanced load delayed alarm “`Failure Isymm`”

Bolted figures are setting values.

Table 4.1 Summary of measuring circuit monitoring

5 Installation instructions

Warning

The successful and safe operation of this device is dependent on proper handling and installation by qualified personnel under observance of all warnings and hints contained in this manual.

In particular the general erection and safety regulations (e.g. IEC, DIN, VDE, or national standards) regarding the correct use of hoisting gear must be observed. Non-observance can result in death, personal injury or substantial property damage.

5.1 Unpacking and repacking

When dispatched from the factory, the equipment is packed in accordance with the guidelines laid down in IEC 60255–21, which specifies the impact resistance of packaging.

This packing shall be removed with care, without force and without the use of inappropriate tools. The equipment should be visually checked to ensure that there are no external traces of damage.

The transport packing can be re-used for further transport when applied in the same way. The storage packing of the individual relays is not suited to transport. If alternative packing is used, this must also provide the same degree of protection against mechanical shock, as laid down in IEC 60255–21–1 class 2 and IEC 60255–21–2 class 1.

Before initial energization with supply voltage, the relay shall be situated in the operating area for at least two hours in order to ensure temperature equalization and to avoid humidity influences and condensation.

5.2 Preparations

The operating conditions must accord with VDE 0100/5.73 and VDE 0105 part 1/7.83, or corresponding national standards for electrical power installations.

Caution!

The modules of digital relays contain CMOS circuits. These shall not be withdrawn or inserted under live conditions! The modules must be so handled that any possibility of damage due to static electrical charges is excluded. During any necessary handling of individual modules the recommendations relating to the handling of **e**lectrostatically **e**ndangered **c**omponents (EEC) must be observed.

In installed conditions, the modules are in no danger.

5.2.1 Mounting and connections

5.2.1.1 Model 7SV512⋆–⋆B⋆⋆⋆ for panel surface mounting

– Secure the unit with four screws to the panel. For the dimensions refer to Figure 2.2.

– Connect the earthing terminal (Terminal 16) of the unit to the protective earth of the panel.

– Make a solid low-ohmic and low-inductance operational earth connection between the earthing surface at the side of the unit using at least one standard screw M4, and the earthing continuity system of the panel; recommended grounding strap DIN 72333 form A, e.g. Order-No. 15284 of Messrs Druseidt, Remscheid, Germany.

– Make connections via screwed terminals.

5.2.1.2 Model 7SV512⋆–⋆C⋆⋆⋆ for panel flush mounting or cubicle installation

– Lift up both labelling strips on the lid of the unit and remove cover to gain access to the four holes for the fixing screws.

– Insert the unit into the panel cut-out and secure it with the fixing screws. For the dimensions refer to Figure 2.3.

– Connect the earthing screw on the rear of the unit to the protective earth of the panel or cubicle.

– Make a solid low-ohmic and low-inductance operational earth connection between the earthing surface at the rear of the unit using at least one standard screw M4, and the earthing continuity system of the panel or cubicle; recommended grounding strap DIN 72333 form A, e.g. Order-No. 15284 of Messrs Druseidt, Remscheid, Germany.

– Make connections via the screwed or snap-in terminals of the sockets of the housing. Observe labelling of the individual connector modules to ensure correct location; observe the max. permissible conductor cross-sections. The use of the screwed terminals is recommended; snap-in connection requires special tools and must not be used for field wiring unless proper strain relief and the permissible bending radius are observed.

5.2.2 Checking the rated data

The rated data of the unit must be checked against the plant data. This applies in particular to the rated current of the current transformers and rated d.c. voltage of the substation battery.

5.2.2.1 Control d.c. voltage of binary inputs

When delivered from the factory, the binary inputs are designed to operate in the total control voltage range from 19 V to 288 V. If the rated control voltage for the binary inputs is 110 V or higher, it is advisable to select a higher pick-up threshold to these inputs to increase stability against stray voltages in the d.c. circuits.

To select a higher pick-up threshold of approximately 80 V for a binary input a solder bridge must be removed. Figure 5.1 shows the allocation of these solder bridges for the inputs BI 1 and BI 2, and their location on the basic p.c.b. (EPS) of the module. Figure 5.2 shows the assignment of these solder bridges for the inputs BI 3 to BI 10 and their location on the additional p.c.b. (EAZ–2).

– Open housing cover.

– Loosen the module using the pulling aids provided at the top and bottom.

Caution!

Electrostatic discharges via the component connections, the PCB tracks or the connecting pins of the modules must be avoided under all circumstances by previously touching an earthed metal surface.

– Pull out module and place onto a conductive surface.

– Check the solder bridges according to Figure 5.1 and 5.2, remove bridges where necessary.

– Insert module into the housing; ensure that the releasing lever is pushed fully to the right before the module is pressed in.

– Firmly push in the module using the releasing lever.

– Close housing cover.

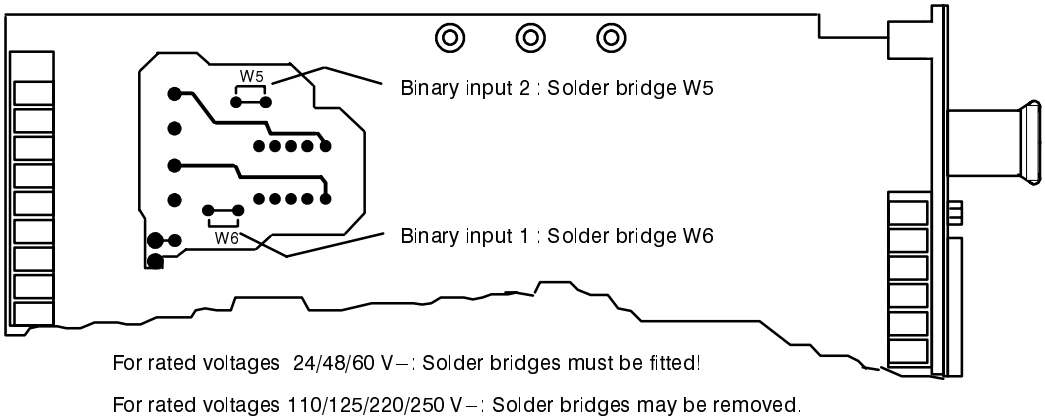

Figure 5.1 Checking of control voltages for binary inputs 1 and 2

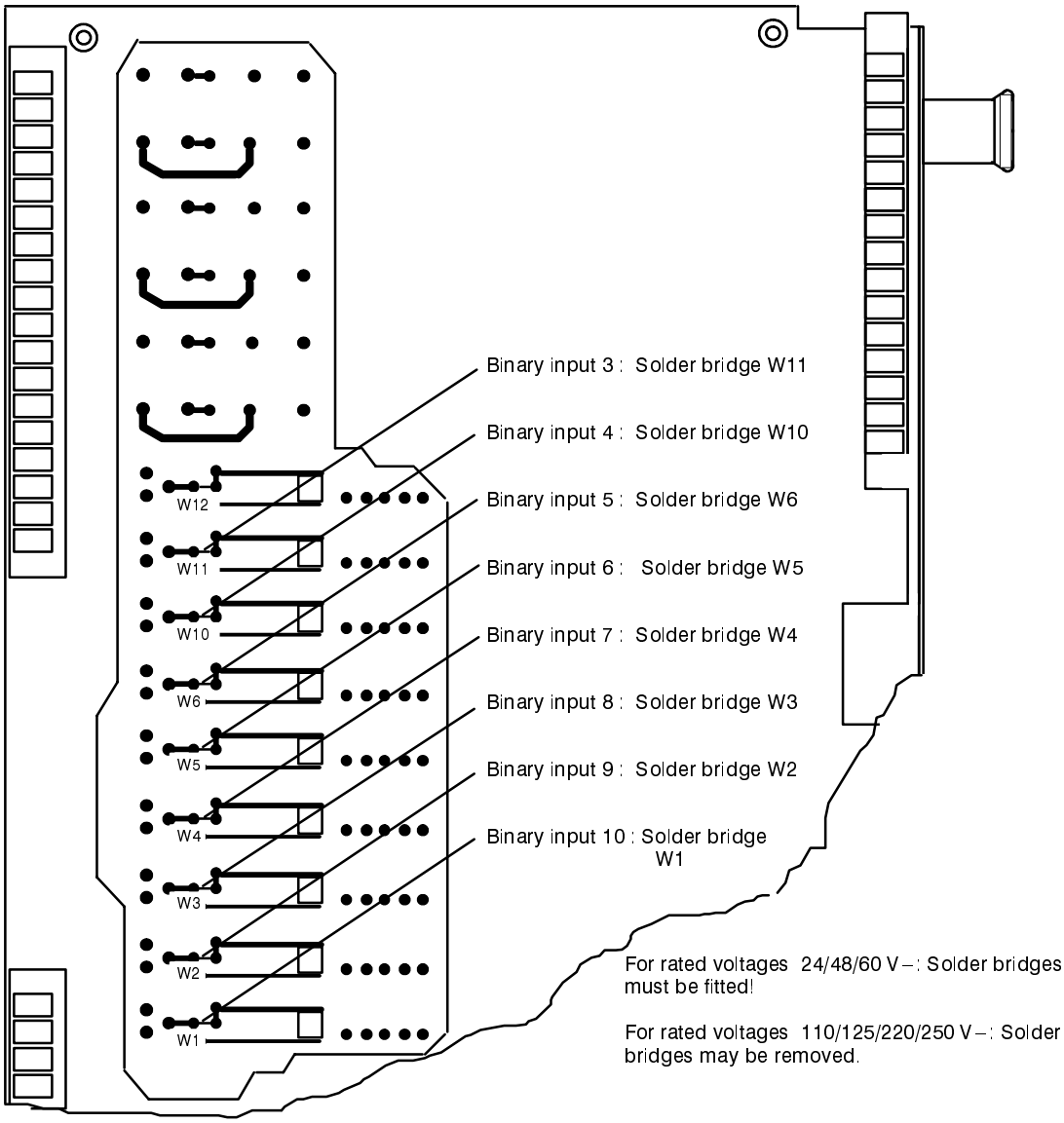

Figure 5.2 Checking of control voltages for binary inputs 3 to 10

5.2.3 Checking the LSA data transmission link

For models with an interface for a central data processing station (e.g. LSA) these connections must also be checked. It is important to visually check the allocation of the transmitter and receiver channels. Since each connection is used for one transmission direction, the transmit connection of the relay must be connected to the receive connection of the central unit and vice versa.

Transmission via optical fibre is particularly insensitive against disturbances and automatically provides galvanic isolation. Transmit and receive connectors are designated with the symbols ⊸⟶ for transmit output and ⟶⊸ for receive input.

The normal signal position for the data transmission is factory preset as “light off”. This can be changed by means of a jumper plug X91 which is accessible when the plug-in module is removed from the case. The jumper is situated in the rear area of the CPU board (EPS) between the connector modules (Figure 5.3).

Jumper	Position	Normal signal position
X91	90 – 91	“Light off”
X91	91 – 92	“Light on”

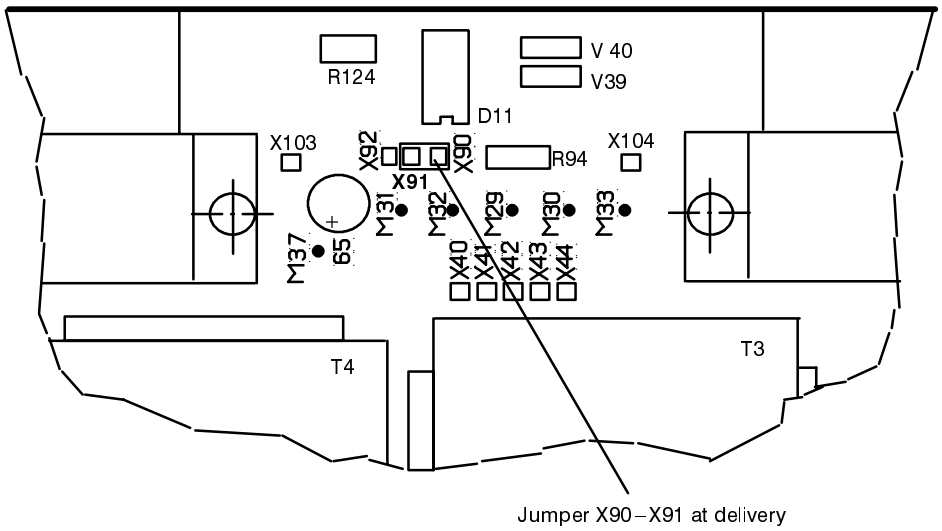

Figure 5.3 Position of the jumper X91 on the CPU board (EPS)

5.2.4 Connections

General and connection diagrams are shown in Appendix A and B. The marshalling possibilities of the binary inputs and outputs are described in Section 5.5.

Because of the high safety demand for the breaker failure protection, a special trip release module is provided for two of the trip relays. The operation of this hardware logic module is described in Section 4.2.7.

For the trip release module to operate optimally, certain plug jumpers are to be observed on the additional p.c.b. EAZ–2. The trip release module and its surroundings are shown in Figure 5.4. As delivered from factory (= recommended positions) the binary inputs BI 8, BI 9, and BI 10 must be assigned as shown in Figure 5.4. The trip relays must be assigned such that trip relay K1 trips the bus-bar breakers whereas trip relay K2 is intended to give transfer trip signal to the opposite end breaker.

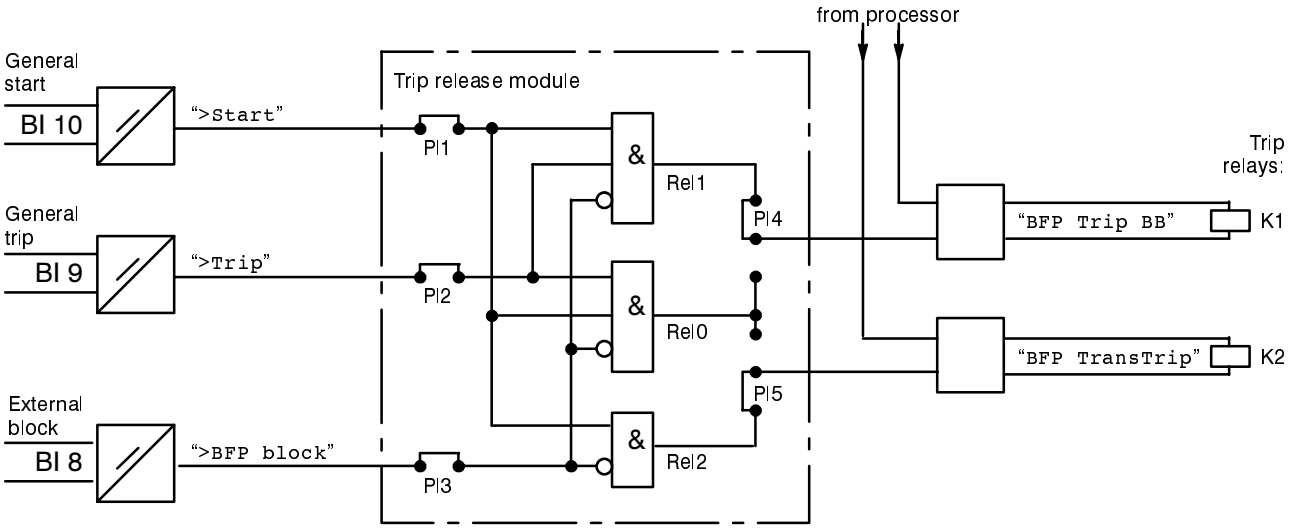

Figure 5.4 Trip release module (hardware module)

Should the plug positions be changed for any reason, the following is to be noted:

– If one of the plugs PI1 or PI2 or PI3 is removed, the corresponding AND condition is fulfilled!

– The outputs of the AND–gates must not be paralleled by the plugs PI4 and/or PI5.

– Nevertheless, it is admissible that the output of the AND–gate Rel0 is connected to both trip relays K1 and K2.

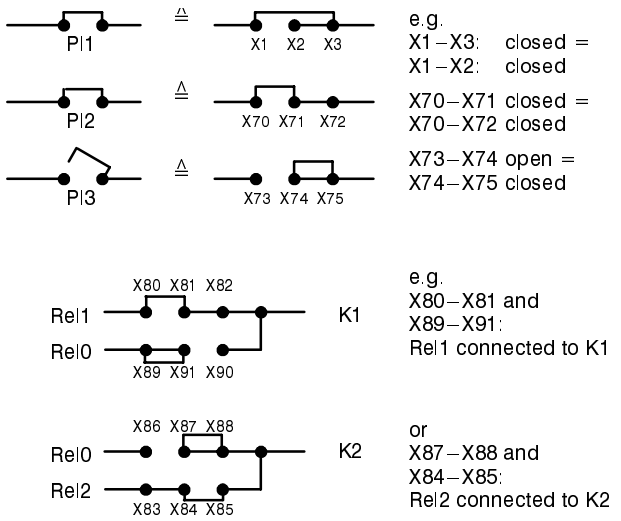

Figure 5.5 Plug jumper arrangement

– And, of course:

Caution!

Electrostatic discharges via the component connections, the PCB tracks or the connecting pins of the modules must be avoided under all circumstances by previously touching an earthed metal surface.

The plug jumpers are arranged as shown in Figure 5.6. Figure 5.5 shows the mechanical and electrical arrangement and is intended as translation between Figure 5.4 and 5.6.

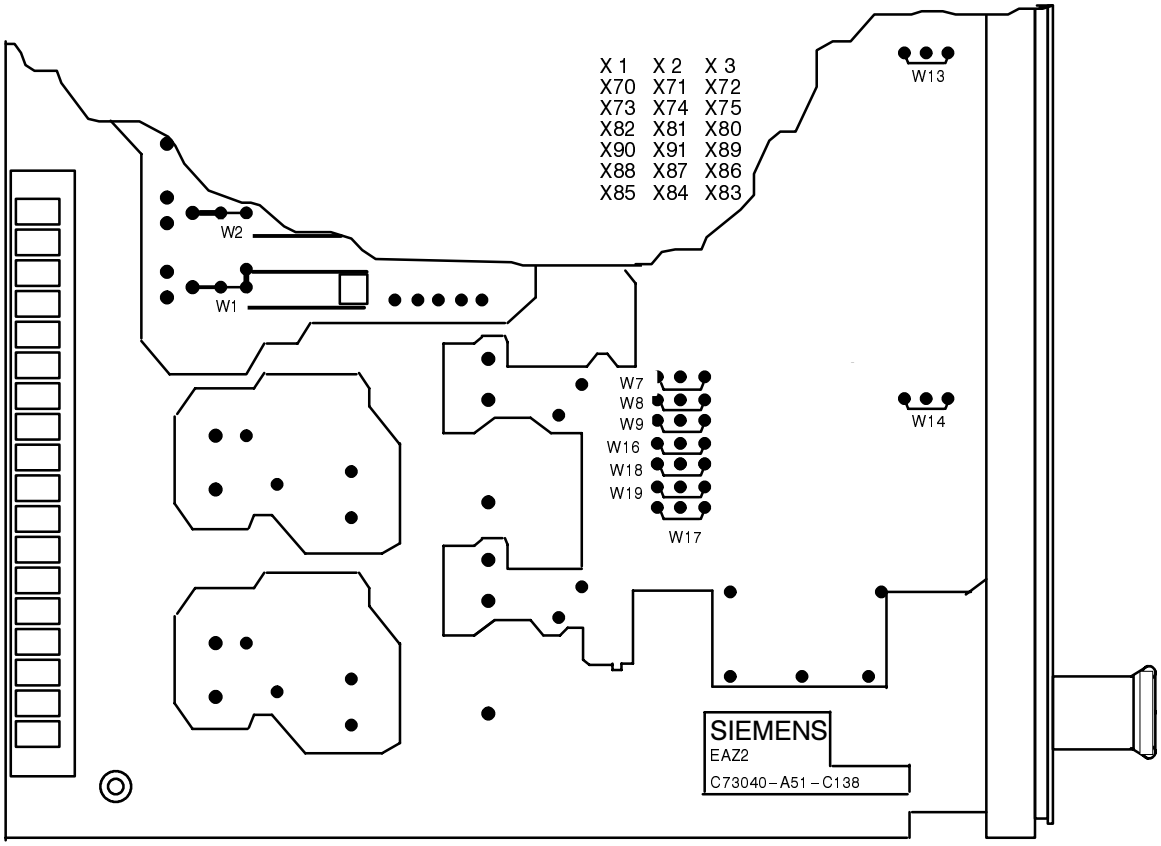

Figure 5.6 Position of the solder bridges W7 to W9 and W16 to W19 on the additional board (EAZ – 2)

5.2.5 Checking the connections

Warning

Some of the following test steps are carried out in the presence of hazardous voltages. They shall be performed by qualified personnel only which is thoroughly familiar with all safety regulations and precautionary measures and pay due attention to these.
Non-observance can result in severe personal injury.

Before initial energization with supply voltage, the relay shall be situated in the operating area for at least two hours in order to ensure temperature equalization and to avoid humidity influences and condensation.

– Switch off the circuit breaker for the d.c. supply circuits!

– Check the continuity of the current transformer circuits against the plant and connection diagrams:

  - Are the current transformers correctly earthed?
  - Are the polarities of the current transformer circuits correct?
  - Is the phase relationship of the current transformers correct?

– If test switches have been fitted in the secondary circuits, check their function, particularly that in the “test” position the current transformer secondary circuits are automatically short-circuited.

– Fit a d.c. ammeter in the auxiliary power circuit; range approx. 1.5 A to 3 A.

– Close the battery supply circuit breaker; check the polarity and magnitude of the voltage at the terminals of the unit or at the connector module.
– The measured current consumption should correspond to approximately 7 W. Transient movement of the ammeter pointer only indicates the charging current of the storage capacitors.

– The unit starts up and, on completion of the run-up period, the green LED on the front comes on, the red LED gets off after at most 5 sec.

– Open the circuit breaker for the d.c. power supply.

– Remove d.c. ammeter; reconnect the auxiliary voltage leads.

– Check through the tripping circuits to the circuit breakers.

– If multiple bus-bar is used, ensure that the distribution of the bus-bar trip command depending on the bus-bar disconnector position of all feeders is correct.

– Check through the control wiring to and from other devices.

– Check the signal circuits.

– Reclose the protective m.c.b.’s.

5.3 Configuration of operational functions

5.3.1 Operational preconditions

For most operational functions, the input of a codeword is necessary. This applies for all entries via the membrane keyboard or front interface which concern the operation on the relay, for example

- configuration parameters for operation language, LSA configuration and device configuration,
- allocation or marshalling of annunciation signals, binary inputs, optical indications,
- setting of functional parameters (thresholds, functions).

The codeword is not required for the read-out of annunciations, operating data or fault data, or for the read-out of setting parameters.

To indicate authorized operator use, press key **CW**, enter the six figure code **0 0 0 0 0 0** and confirm with **E**. Codeword entry can also be made retrospectively after paging or direct addressing to any setting address.

```
E N T E R   C O D E W O R D :
@ @ @ @ @ @
```

```
C W   A C C E P T E D
```

```
C O D E W O R D   W R O N G
```

The entered characters do not appear in the display, instead only a symbol @ appears. After confirmation of the correct input with **E** the display responds with **CW ACCEPTED**. Press the entry key **E** again.

If the codeword is not correct the display shows **CODEWORD WRONG**. Pressing the **CW** key allows another attempt at codeword entry.

5.3.2 Settings for operating parameters – address block 70

Operating parameters can be set in address block 70. This block allows the operator language to be changed. The transmission speed for transfer of data to a personal computer can be matched to the interface of the PC, messages on the front display can be selected here for the quiescent state of the unit or after a fault event. To change any of these parameters, codeword entry is necessary.

The simplest way of arriving at the beginning of this configuration block is to use key **DA**, followed by the address number **7 0 0 0** and ENTER, key **E**. The address 7000 appears (see below). Key ↑ will take the operator to address 7001.

The display shows the four-digit address number, i.e. block and sequence number. The title of the requested parameter appears behind the bar (see below). The second line of the display shows the text applicable to the parameter. The present text can be rejected by the “No”–key **N**. The next text choice then appears, as shown in the boxes below. The chosen alternative **must be confirmed with enter key E!**

When the relay is delivered from the factory, the device is programmed to give function names and outputs in the German language. This can be changed under address 7001. The operator languages available at present are shown in the boxes below.

The setting procedure can be ended at any time by the key combination **F E**, i.e. depressing the function key **F** followed by the entry key **E**. The display shows the question “SAVE NEW SETTINGS?”. Confirm with the “Yes”–key **Y** that the new settings shall become valid now. If you press the “No”–key **N** instead, codeword operation will be aborted, i.e. all alterations which have been changed since the last codeword entry are lost. Thus, erroneous alterations can be made ineffective.

If one tries to leave the setting range for the configuration blocks (i.e. address blocks 60 to 79) with keys ⇑ ⇓, the display shows the question “END OF CODEWORD OPERATION ?”. Press the “No”–key **N** to continue configuration. If you press the “Yes”–key **J/Y** instead, another question appears: “SAVE NEW SETTINGS ?”. Now you can confirm with **J/Y** or abort with **N**, as above.

When one exits the setting program, the altered parameters, which until then have been stored in buffer stores, are permanently secured in EEPROMs and protected against power outage. If configuration parameters have been changed the processor system will reset and re-start. During restart the device is not operational.

```
7 0 0 0 OPERATING
PARAMETERS
```

Beginning of the block “Operating parameters”

```
7 0 0 1 LANGUAGE
DEUTSCH
```

```
ENGLISH
```

The available languages can be called up by repeatedly pressing the “No”–key **N**. Each language is spelled in the corresponding country’s language. If you don’t understand a language, you should find your own language.

The required language is chosen with the enter key **E**.

```
7 0 0 2 OPER.BAUDR.
  1 2 0 0  BAUD
```

```
  2 4 0 0  BAUD
```

```
  4 8 0 0  BAUD
```

```
  9 6 0 0  BAUD
```

```
1 9 2 0 0  BAUD
```

The transmission Baud-rate for communication via the operating interface at the front can be adapted to the operator’s communication interface, e.g. personal computer, if necessary. The available possibilities can be displayed by repeatedly depression of the “No”–key **N**. Confirm the desired Baud-rate with the entry key **E**.

Note: For operator panel 7XR5, the operation Baud-rate must be *1200 BAUD*.

```
7 0 0 3 DATE  FORMAT
DD.MM.YYYY
```

```
MM/DD/YYYY
```

The date in the display is preset to the European format Day.Month.Year. Switch-over to the American format Month/Day/Year is achieved by depressing the “No”–key **N**; then confirm with the entry key **E**.

DD two figures for the day
MM two figures for the month
YYYY four figures for the year (incl. century)

```
7 0 0 4 FAULT  INDIC
WITH  FAULT  DETEC
```

```
WITH  TRIP  COMM.
```

Stored LED indications and the fault event messages in the display can be displayed either with each fault detection or only after trip command is given. This mode can be changed by depressing the “No”–key **N** and confirmed with the enter–key **E**.

```
7005 OPER.  1st  L
IL1[%]=
IL2[%]=
```
etc.

Message to be displayed in the **1st** display line during operation. Any of the operational measured values according to Section 6.4.5 can be selected as messages in the the quiescent state of the relay by repeatedly depressing the “No”–key **N**; The value selected by the entry key **E** under address 7005 will appear in the **first** line of the display.

```
7006 OPER.  2nd  L
IL2[%]=
```
etc.

Message to be displayed in the **2nd** display line during operation. The value selected by the entry key **E** under address 7006 will appear in the **second** line of the display.

Fault event annunciations can be displayed after a fault on the front. These can be chosen under addresses 7007 and 7008. The possible messages can be selected by repeatedly pressing the “No”–key **N**. The desired message is confirmed with the enter key **E**. These spontaneous messages are acknowledged during operation with the RESET key or via the remote reset input of the device. After acknowledgement, the operational messages of the quiescent state will be displayed again as chosen under addresses 7005 and 7006.

```
7007 FAULT  1st  L
Fault  Type
Trip  Type
```

After a fault event, the **first** line of the display shows:

type of initiation (faulty phases),

type of trip command (single- or three-pole tripped breaker pole or three-pole trip),

```
7008 FAULT  2nd  L
```
etc.

After a fault event, the **second** line of the display shows:

the possibilities are the same as under address 7007.

```
7009 DEVICE  ADD.
0
```

Identification number of the relay within the substation; valid for both the interfaces (operating and LSA interface). The number can be chosen at liberty, but must be used only once within the plant system
Smallest permissible number: **0**
Largest permissible number: **255**

```
7010 FEEDER  ADD.
0
```

Number of the feeder within the substation; valid for both the interfaces (operating and LSA interface)
Smallest permissible number: **0**
Largest permissible number: **255**

5.4 Configuration of the device functions

5.4.1 Introduction

The **device** 7SV512 is capable of providing a series of **functions**. The scope of the hard- and firm-ware is matched to these functions. Furthermore, individual functions can be set (configured) to be effective or non-effective or the interaction of the functions can be modified by configuration parameters. Additionally, the relay can be adapted to the system frequency.

The configuration parameters are input through the integrated operation keyboard at the front of the device or by means of a personal computer, connected to this front-interface. The use of the integrated operating keyboard is described in detail in Section 6.2. Alteration of the programmed parameters requires the input of the codeword (see Section 5.3.1). Without codeword, the setting can be read out but not altered.

For the purpose of configuration, addresses 78★★ are provided. One can access the beginning of the configuration blocks either by direct dial

– press direct address key **DA**,

– type in address **7 8 0 0**,

– press execute key **E** ;

or by paging with the keys ⇑ (forwards) or ⇓ (backwards), until address 7800 appears.

Within the bock 78 one can page forward with ↑ or back with ↓. Each paging action leads to a further address for the input of a configuration parameter. In the following sections, each address is shown in a box and explained. In the upper line of the display, behind the number and the bar, stands the associated device function. In the second line is the associated text (e.g. "*EXIST*"). If this text is appropriate the arrow keys ↑ or ↓ can be used to page the next address. If the text should be altered press the "No"–key **N**; an alternative text then appears (e.g. "*NON–EXIST*"). There may be other alternatives which can then be displayed by repeated depression of the "No"–key **N**. The required alternative **must be confirmed with the key E!**

The configuration procedure can be ended at any time by the key combination **F E**, i.e. depressing the function key **F** followed by the entry key **E**. The display shows the question "SAVE NEW SETTINGS ?". Confirm with the "Yes"–key **J/Y** that the new settings shall become valid now. If you press the "No"–key **N** instead, codeword operation will be aborted, i.e. all alterations which have been changed since the last codeword entry are lost. Thus, erroneous alterations can be made ineffective.

If one tries to leave the setting range for the configuration blocks (i.e. address blocks 60 to 79) with keys ⇑ ⇓, the display shows the question "END OF CODEWORD OPERATION ?". Press the "No"–key **N** to continue configuration. If you press the "Yes"–key **J/Y** instead, another question appears: "SAVE NEW SETTINGS ?". Now you can confirm with **J/Y** or abort with **N**, as described above.

When one exits the setting program, the altered parameters, which until then have been stored in volatile memories, are then permanently secured in EEPROMs and protected against power outage. The processor system will reset and re-start. During re-start the device is not operational.

5.4.2 Programming the scope of functions – address block 78

The available functions can be programmed as existing or not existing. For some functions it may also be possible to select between multiple alternatives.

Functions which are **configured** as *NON EXIST* will not be processed in 7SV512: There will be no annunciations and the associated setting parameters (functions, limit values) will not be requested during setting (Section 6.3). In contrast, **switch-off** of a function means that the function will be processed, that indication will appear (e.g. "... switched off") but that the function will have no effect on the result of the protective process (e.g. no command).

The following boxes show the possibilities for the maximum scope of the device. In an actual case, functions which are not available will not appear in the display.

```
7800 SCOPE OF
FUNCTIONS
```

Beginning of the block "scope of functions"

```
7828 FAULT RECRD
EXIST
```

```
NON EXIST
```

```
7869 LSA
NON-EXIST
```

```
EXIST
```

```
7838 POLE DISCRP
NON-EXIST
```

```
EXIST
```

```
7885 PARAM. C/O
NON-EXIST
```

```
EXIST
```

The rated system frequency must comply with the setting under address 7899. If the system frequency is not 50 Hz, address 7899 must be changed.

```
7899 FREQUENCY
fN 50 Hz
```

```
fN 60 Hz
```

Rated system frequency *50 Hz* or *60 Hz*

5.5 Marshalling of binary inputs, binary outputs and LED indicators

5.5.1 Introduction

The functions of the binary inputs and outputs represented in the general diagrams (Appendix A) relate to the factory settings. The assignment of the inputs and outputs of the internal functions can be rearranged and thus adapted to the on-site conditions.

Marshalling of the inputs, outputs and LEDs is performed by means of the integrated operator panel or via the operating interface in the front. The operation of the operator panel is described in detail in Section 6.2. Marshalling begins at the parameter address 6000.

The input of the codeword is required for marshalling (refer Section 5.3.1). Without codeword entry, parameters can be read out but not be changed. During codeword operation, i.e. from codeword entry until the termination of the configuration procedure, the solid bar in the display flashes.

When the firmware programs are running the specific logic functions will be allocated to the physical input and output modules or LEDs in accordance with the selection.

Example: A start signal is registered. This event is generated in the device as an "Annunciation" (logical function) and should be available at certain terminals of the unit as a N.O. contact. Since specific unit terminals are hard-wired to a specific (physical) output relay, e.g. to the signal relay 1, the processor must be advised that the logical signal "`BFP Start`" should be transmitted to the signal relay 1. Thus, when marshalling is performed two statements of the operator are important: **Which** (logical) annunciation generated in the protection unit program should trigger **which** (physical) output relay? Up to 20 logical annunciations can trigger one (physical) output relay.

A similar situation applies to binary inputs. In this case external information (e.g. "Trip L1 by feeder protection") is connected to the unit via a (physical) input module and should initiate a (logical) function, namely start of the breaker failure protection. The corresponding question to the operator is then: **Which** signal from a (physical) input relay should initiate **which** reaction in the device? One physical input signal can initiate up to 10 logical functions.

The trip relays can also be assigned different functions. Each trip relay can be controlled by each command function or combination of command functions.

The logical annunciation functions can be used in multiple manner. E.g. one annunciation function can trigger several signal relays, several trip relays, additionally be indicated by LEDs, and be controlled by a binary input unit. The restriction is, that the total of all physical input/output units (binary inputs plus signal relays plus LEDs plus trip relays) which are to be associated with one logical function must not exceed a number of 10. If this number is tried to be exceeded, the display will show a corresponding message.

The marshalling procedure is set up such that for each (physical) binary input, each output relay, and for each marshallable LED, the operator will be asked which (logical) function should be allocated.

The offered logical functions are tabulated for the binary inputs, outputs and LEDs in the following sections.

The beginning of the marshalling parameter blocks is reached by directly selecting the address 6000, i.e.

– press direct address key **DA**,
– enter address **6 0 0 0**,
– press enter key **E**

or by paging with keys ⇑ (forwards) or ⇓ (backwards) until address 6000 has been reached. The beginning of the marshalling blocks then appears:

```
6 0 0 0 ▮
M A R S H A L L I N G
```

Beginning of marshalling blocks

One can proceed through the marshalling blocks with the key ⇑ or go back with the key ⇓ . Within a block, one goes forwards with ↑ or backwards with ↓ . Each forward or backward step leads to display of the next input, output or LED position. In the display, behind the address and the solid bar, the physical input/output unit forms the heading.

The key combination **F** ↑, i.e. depressing the function key **F** followed by the arrow key ↑, switches over to the selection level for the logical functions to be allocated. During this change-over (i.e. from pressing the **F** key until pressing the ↑ key) the bar behind the address number is replaced by a "F". The display shows, in the upper line, the physical input/output unit, this time with a three digit index number. The second display line shows the logical function which is presently allocated.

On this selection level the allocated function can be changed by pressing the "No" – key **N**. By repeated use of the key **N** all marshallable functions can be paged through the display. Back-paging is possible with the backspace key **R**. When the required function appears press the execute key **E**. After this, further functions can be allocated to the same physical input or output module (with further index numbers) by using the key ↑. **Each selection must be confirmed by pressing the key E!** If a selection place shall not be assigned to a function, selection is made with the function "`not allocated`".

You can leave the selection level by pressing the key combination **F** ↑ (i.e. depressing the function key **F** followed by the arrow key ↑). The display shows again the four digit address number of the physical input/output module. Now you can page with key ↑ to the next input/output module or with ↓ to the previous to repeat selection procedure, as above.

The logical functions are also provided with function numbers which are equally listed in the tables. If the function number is known, this can be input directly on the selection level. Paging through the possible functions is then superfluous. With direct input of the function number, leading zeros need not be entered. After input of the function number, use **the execute key E**. Immediately the associated identification of the function appears for checking purposes. This can be altered either by entering another function number or by paging through the possible functions, forwards with the "No" – key **N** or backwards with the backspace key **R**. If the function has been changed, another confirmation is necessary with **the execute key E**.

In the following paragraphs, allocation possibilities for binary inputs, binary outputs and LED indicators are given. The arrows ⇑⇓ or ↑↓ at the left hand side of the display box indicate paging from block to block, within the block or on the selection level. The character F before the arrow indicates that the function key **F** must be pressed before pushing the arrow key ↑.

The function numbers and designations are listed completely in Appendix C.

The marshalling procedure can be ended at any time by the key combination **F E**, i.e. depressing the function key **F** followed by the entry key **E**. The display shows the question "SAVE NEW SETTINGS?". Confirm with the "Yes" – key **J**/**Y** that the new allocations shall become valid now. If you press the "No" – key **N** instead, codeword operation will be aborted, i.e. all alterations which have been changed since the last codeword entry are lost. Thus, erroneous alterations can be made ineffective.

If one tries to leave the setting range for the configuration blocks (i.e. address blocks 60 to 79) with keys ⇑ ⇓, the display shows the question "END OF CODEWORD OPERATION ?". Press the "No" – key **N** to continue marshalling. If you press the "Yes" – key **J**/**Y** instead, another question appears: "SAVE NEW SETTINGS ?". Now you can confirm with **J**/**Y** or abort with **N**, as above.

When one exits the marshalling program, the altered parameters, which until then have been stored in volatile memory, are then permanently secured in EEPROMs and protected against power outage. The processor system will reset and re-start. During re-start the device is not operational.

5.5.2 Marshalling of the binary inputs – address block 61

The unit contains 10 binary inputs which are designated INPUT 1 to INPUT 10. Input s 1 to 9 can be marshalled in address block 61. The address block is reached by paging in blocks ⇑⇓ or by direct addressing with **DA 6 1 0 0 E**. The selection procedure is carried out as described in Section 5.5.1.

A choice can be made for each individual input function as to whether the desired function should become operative in the "normally open" mode or in the "normally closed" mode, whereby:

NO – "normally open" mode: the input acts as a NO contact, i.e. the control voltage at the input terminals activates the function;

NC – "normally closed" mode: the input acts as a NC contact, i.e. control voltage present at the terminals turns off the function, control voltage absent activates the function.

When paging through the display, each input function is displayed with the index "NO" or "NC" when proceeding with the "No"–key **N**.

Table 5.1 shows a complete list of all the binary input functions with their associated function number **FNo**. Input functions naturally have no effect if the corresponding protection function is not fitted in the relay or has been programmed out ("de-configured", refer Section 5.4.2).

With direct input of the function number, leading zeros need not be used. To indicate the contact mode the function number can be extended by a decimal point followed by **0** or **1**, whereby

.0 means "normally open" mode, corresponds to "NO" as above.

.1 means "normally closed" mode, corresponds to "NC" as above.

If the extension with .0 or .1 is omitted the display first indicates the function designation in "normally open" mode NO. By pressing the "No"–key **N** the mode is changed to NC. After direct input other functions can be selected by paging through the functions forwards with the "No"–key **N** or backwards with the backspace key **R**. The changed function then must be re-confirmed by the entry key **E**.

Note: Binary input 10 is reserved exclusively for the general fault detection signal of the main protection relay. If the main protection relay does not output a fault detection (start or pick-up) signal, the trip command must be repeated to this input. The allocation of this input cannot be changed. **Attention! The binary inputs 8 to 10 are included in the trip release concept of the protection device (refer Section 4.2.7 for explanations). The allocation of binary inputs 8 and 9 should not be changed unless this concept is comprehensively clear, and only in harmony with this concept.**

The assignment of the binary inputs as delivered from factory is shown in the general diagrams in Appendix A. The following boxes show, as an example, the allocation for binary input 1. Table 5.2 shows all binary inputs as preset from the factory.

```
⇑ 6 1 0 0 ▮ M A R S H A L L I N G
⇓ B I N A R Y   I N P U T S
```

Beginning of block "Marshalling binary inputs"

The first binary input is reached with the key ↑:

```
F↑ 6 1 0 1 ▮ B I N A R Y
↓  I N P U T   1
```

Allocations for binary input 1

Change over to the selection level with **F** ↑:

```
0 0 1 ▮ I N P U T   1
> L E D   r e s e t       N O
```

Reset of stored LED indications, FNo 6;
“normally open” operation:
LEDs are reset when control voltage present

```
0 0 2 ▮ I N P U T   1
n o t   a l l o c a t e d
```

No further functions are initiated by binary input 1

Leave the selection level with key combination **F** ↑. You can go then to the next binary input with the arrow key ↑.

```
6 1 0 1 ▮ B I N A R Y
I N P U T   1
```

Marshalling binary input 1

FNo	Abbreviation	Description
1	not allocated	Binary input is not allocated to any input function
5	>Time Synchro	Synchronize internal real time clock
6	>LED-reset	Reset LED indicators
7	>Start FltRec	Start fault recording from external command via binary input
16	>CB Aux. L1	Circuit breaker auxiliary contact L1 (L1 is closed)
17	>CB Aux. L2	Circuit breaker auxiliary contact L2 (L2 is closed)
18	>CB Aux. L3	Circuit breaker auxiliary contact L3 (L3 is closed)
19	>CB Aux. 3p C	Circuit breaker auxiliary contact all poles closed (series connection)
20	>CB Aux. 1p C	Circuit breaker auxiliary contact any pole closed (parallel connection)
21	>Annunc. 1	User definable annunciation 1
22	>Annunc. 2	User definable annunciation 2
23	>Annunc. 3	User definable annunciation 3
24	>Annunc. 4	User definable annunciation 4
31	>B/F on	Switch on breaker failure protection
32	>B/F off	Switch off breaker failure protection
33	>Pole Dis. on	Switch on pole discrepancy supervision
34	>Pole Dis.off	Switch off pole discrepancy supervision
35	>Flt.Rec. on	Switch on fault recording function
36	>Flt.Rec. off	Switch off fault recording function
59	>ParamSelec.1	Parameter set selection 1 (in connection with 060)
60	>ParamSelec.2	Parameter set selection 2 (in connection with 059)
70	>Start	General fault detection signal from feeder protection
71	>Start N	Earth fault detection signal from feeder protection
72	>Trip	General trip signal from feeder protection
73	>Trip 3pole	Trip signal three-pole from feeder protection
74	>Trip L1	Trip signal L1 from feeder protection
75	>Trip L2	Trip signal L2 from feeder protection
76	>Trip L3	Trip signal L3 from feeder protection
77	>B/F block	Block breaker failure protection
78	>CB defect	Circuit breaker defective from circuit breaker

Table 5.1 Marshalling possibilities for binary inputs

The complete pre-settings are listed in Table 5.2.

Addr	1st display line	2nd display line	FNo	Remarks
6100	MARSHALLING	BINARY INPUTS		Heading of the address block
6101	BINARY INPUT 1	INPUT 1 >LED reset NO	6	Acknowledge and reset of stored LED and display indications, LED – test
6102	BINARY INPUT 2	INPUT 2 >CB defect NO	78	Circuit breaker defective signal
6103	BINARY INPUT 3	INPUT 3 >Trip L1 NO	74	Trip commands from feeder protection
6104	BINARY INPUT 4	INPUT 4 >Trip L2 NO	75	
6105	BINARY INPUT 5	INPUT 5 >Trip L3 NO	76	
6106	BINARY INPUT 6	INPUT 6 >CB Aux. 1p C NO	20	from circuit breaker auxiliary contacts
6107	BINARY INPUT 7	INPUT 7 >CB Aux. 3p C NO	19	
6108	BINARY INPUT 8	INPUT 8 [2]) >B/F block NO	77	Block circuit breaker failure protection [2])
6109	BINARY INPUT 9	INPUT 9 [2]) >Trip NO	72	General start and general trip signal from feeder protection [1]) [2])
6110	BINARY INPUT 10	INPUT 10 [1]) >Start NO	70	

[1]) Binary input 10 cannot be altered.

[2]) Binary inputs 8 and 9 should not be altered (see *Note* above in this section).

Table 5.2 Preset binary inputs

5.5.3 Marshalling of the signal output relays – address block 62

The unit contains 8 signal outputs (alarm relays). The signal relays are designated SIGNAL RELAY 1 to SIGNAL RELAY 8 and can be marshalled in address block 62. The block is reached by paging in blocks with ⇑ ⇓ or by directly addressing **DA 6 2 0 0 E**. The selection procedure is carried out as described in Section 5.5.1. Multiple annunciations are possible, i.e. one logical annunciation function can be given to several physical signal relays (see also Section 5.5.1).

Table 5.3 gives a listing of all annunciation functions with the associated function numbers **FNo**. Annunciation functions are naturally not effective when the corresponding protection function is not fitted in the relay or has been programmed out ("de-configured" – refer Section 5.4.2).

The assignment of the output signal relays as delivered from factory is shown in the general diagrams in Appendix A. The following boxes show an example for marshalling. In the example for signal relay 1 the group annunciation for several annunciation functions on one signal relay is shown. Table 5.4 shows all signal relays as preset from the factory.

```
6 2 0 0 MARSHALLING
SIGNAL  RELAYS
```

Beginning of the block "Marshalling of the output signal relays"

The first signal relay is reached with the key ↑:

```
6 2 0 1 SIGNAL
RELAY  1
```

Allocations for signal relay 1

Change over to the selection level with **F** ↑:

```
0 0 1 RELAY  1
BFP-Start
```

Signal relay 1 has been preset for:
1st: Start of breaker failure protection, FNo 473;

```
0 0 2 RELAY  1
PoleDis.Start
```

Signal relay 1 has been preset for:
2nd: Start of pole discrepancy protection, FNo 601;

```
0 0 3 RELAY  1
not  allocated
```

no further functions are preset for signal relay 1

Leave the selection level with key combination **F** ↑. You can go then to the next signal output relay with the arrow key ↑.

```
6 2 0 1 SIGNAL
RELAY  1
```

Allocations for signal relay 1

Note as to Table 5.3: Annunciations with the function numbers below 100 are identical with those for binary inputs. They represent the direct confirmation of the binary input and are available as long as the corresponding binary input is energized. These direct confirmation functions are indicated by a leading “>” sign.

Further information about annunciations see Section 6.4.

FNo	Abbreviation	Description
1	not allocated	Binary output is not allocated to any output function
5	>Time Synchro	Synchronize internal real time clock
6	>LED-reset	Reset LED indicators
7	>Start FltRec	Start fault recording from external command via binary input
16	>CB Aux. L1	Circuit breaker auxiliary contact L1 (L1 is closed)
17	>CB Aux. L2	Circuit breaker auxiliary contact L2 (L2 is closed)
18	>CB Aux. L3	Circuit breaker auxiliary contact L3 (L3 is closed)
19	>CB Aux. 3p C	Circuit breaker auxiliary contact all poles closed (series connection)
20	>CB Aux. 1p C	Circuit breaker auxiliary contact any pole closed (parallel connection)
21	>Annunc. 1	User definable annunciation 1
22	>Annunc. 2	User definable annunciation 2
23	>Annunc. 3	User definable annunciation 3
24	>Annunc. 4	User definable annunciation 4
31	>B/F on	Switch on breaker failure protection
32	>B/F off	Switch off breaker failure protection
33	>Pole Dis. on	Switch on pole discrepancy supervision
34	>Pole Dis.off	Switch off pole discrepancy supervision
35	>Flt.Rec. on	Switch on fault recording function
36	>Flt.Rec. off	Switch off fault recording function
59	>ParamSelec.1	Parameter set selection 1 (in connection with 060)
60	>ParamSelec.2	Parameter set selection 2 (in connection with 059)
70	>Start	General fault detection signal from feeder protection
71	>Start N	Earth fault detection signal from feeder protection
72	>Trip	General trip signal from feeder protection
73	>Trip 3pole	Trip signal three-pole from feeder protection
74	>Trip L1	Trip signal L1 from feeder protection
75	>Trip L2	Trip signal L2 from feeder protection
76	>Trip L3	Trip signal L3 from feeder protection
77	>B/F block	Block breaker failure protection
78	>CB defect	Circuit breaker defective (from circuit breaker monitor)
101	Dev.Operative	Relay operative
107	Flt.Rec.Trans	Fault record data are available or being transmitted
108	Fault.Rec.off	Fault recording switched off
110	Param.Running	Parameters are being set
116	Param. Set A	Parameter Set A is activated
117	Param. Set B	Parameter Set B is activated
118	Param. Set C	Parameter Set C is activated
119	Param. Set D	Parameter Set D is activated
121	Failure 18V	Failure in 18 V internal dc supply
122	Failure 15V	Failure in 15 V internal dc supply
123	Failure 5V	Failure in 5 V internal dc supply
124	Failure 0V	Failure in 0 V A/D converter
125	Failure RKA	Failure in base input/output module
151	Failure ΣI	Failure supervision ΣI (measured currents)
154	Failure Isymm	Failure supervision symmetry I
469	Device FltDet	General fault detection signal
470	Device Trip	General trip signal
471	BFP off	Breaker failure protection switched off
472	BFP-Pickup	Breaker failure protection initiated (signal from feeder protection)
473	BFP-Start	Breaker failure protection started

Table 5.3 Marshalling possibilities for signal relays and LEDs (Continued next page)

FNo	Abbreviation	Description
474	BFP-Start L1	Start of breaker failure protection for pole L1
475	BFP-Start L2	Start of breaker failure protection for pole L2
476	BFP-Start L3	Start of breaker failure protection for pole L3
500	Time del.init	Any delay time is running
501	BFP CBdefTrip	Trip breaker failure protection during defect of the feeder breaker
502	BFP Trip L1	Trip by breaker failure protection pole L1 (1st stage)
503	BFP Trip L2	Trip by breaker failure protection pole L2 (1st stage)
504	BFP Trip L3	Trip by breaker failure protection pole L3 (1st stage)
505	BFP Trip L123	Trip by breaker failure protection three-pole (1st stage)
506	BFP CrossTrip	Trip breaker failure protection on local feeder breaker (1st stage)
507	BFP Trip BB	Trip breaker failure protection on bus-bar breakers (2nd stage)
508	BFP TransTrip	Transfer trip signal of breaker failure protection
509	BFP block	Breaker failure protection blocked
510	BFP T1 3pole	Delay time T1 after single-pole trip expired
511	BFP T1 1pole	Delay time T1 after three-pole trip expired
512	BFP T2 Curr	Delay time T2 with current detection expired
513	BFP T2 CBaux	Delay time T2 with CB auxiliary contact interrogation expired
514	BFP Tend Flt	Delay time for end fault protection expired
515	BFP T3 BR def	Delay time with defective circuit breaker expired
516	BFP HW Rel.	Release signal from hard-ware monitor present
600	PoleDis. off	Pole discrepancy supervision is switched off
601	PoleDis.Start	Pole discrepancy supervision started (general)
602	PoleDis. L1	Pole discrepancy supervision started for pole L1
603	PoleDis. L2	Pole discrepancy supervision started for pole L2
604	PoleDis. L3	Pole discrepancy supervision started for pole L3
610	PoleDis. Trip	Trip by pole discrepancy supervision

Table 5.3 Marshalling possibilities for signal relays and LEDs

Addr	1st display line	2nd display line	FNo	Remarks
6200	MARSHALLING	SIGNAL RELAYS		Heading of the address block
6201	SIGNAL RELAY 1 RELAY 1	RELAY 1 BFP-Start PoleDis.Start	 473 601	Start of breaker failure protection or pole discrepancy supervision
6202	SIGNAL RELAY 2	RELAY 2 BFP CrossTrip	 506	local trip command by breaker failure protection
6203	SIGNAL RELAY 3	RELAY 3 BFP Trip BB	 507	Bus-bar trip command by breaker failure protection
6204	SIGNAL RELAY 4	RELAY 4 BFP TransTrip	 508	Transfer trip command by breaker failure protection
6205	SIGNAL RELAY 5	RELAY 5 Dev.operative	 101	Device operative; the NC contact of this relay indicates “Device fault”
6206	SIGNAL RELAY 6	RELAY 6 BFP block	 509	Breaker failure protection is blocked
6207	SIGNAL RELAY 7	RELAY 7 BFP CBdefTrip	 515	Trip by breaker failure protection during defect of the circuit breaker
6208	SIGNAL RELAY 8 RELAY 8	RELAY 8 Failure ΣI Failure Isymm	 151 154	Failure or disturbance in the measured quantities

Table 5.4 Preset annunciations for signal relays

5.5.4 Marshalling of the LED indicators – address block 63

The unit contains 8 LEDs for optical indications, 6 of which can be marshalled. They are designated LED 1 to LED 6 and can be marshalled in address block 63. The block is reached by paging in blocks with ⇑ ⇓ or by directly addressing with **DA 6 2 0 0 E**. The selection procedure is carried out as described in Section 5.5.1. Multiple annunciations are possible, i.e. one logical annunciation function can be given to several LEDs (see also Section 5.5.1).

Apart from the logical function, each LED can be marshalled to operate either in the stored mode (m for **m**emorized) or unstored mode (nm for "**n**ot **m**emorized"). Each annunciation function is displayed with the index m or nm when proceeding with the **N**–key.

The marshallable annunciation functions are the same as those listed in Table 5.3. Annunciation functions are, of course, not effective when the corresponding function has been programmed out (deconfigured).

With direct input of the function number it is not necessary to input the leading zeros. To indicate whether the stored or unstored mode shall be effective the function number can be extended by a decimal point followed by 0 or 1, whereby

.0 unstored indication (not memorized) corresponds to "nm" as above,
.1 stored indication (memorized) corresponds to "m" as above.

If the extension with .0 or .1 is omitted the display shows first the function designation in unstored mode with "nm". Press the "No"–key **N** to change to stored mode "m". After direct input other functions can be selected by paging through the functions forwards with the "No"–key **N** or backwards with the backspace key **R.** The changed function then must be re-confirmed by the enter–key **E**.

The assignment of the LEDs as preset by the factory is shown in the front of the unit (Figure 6.1). The following boxes show, as an example, the assignment for LED 1. Table 5.5 shows all LED indicators as they are preset from the factory.

```
6 3 0 0 M A R S H A L L I N G
L E D   I N D I C A T O R S
```

Beginning of the block "Marshalling of the LED indicators"

The first marshallable LED is reached with the key ↑:

```
6 3 0 1 L E D   1
```

Allocations for LED 1

Change over to the selection level with **F** ↑:

```
0 0 1 L E D   1
B F P - S t a r t          n m
```

LED 1 has been preset for:
Breaker failure protection started, FNo 473;

```
0 0 2 L E D   1
n o t   a l l o c a t e d
```

no further functions are preset for LED 1

After input of all annunciation functions for LED 1, change-back to the marshalling level is carried out with **F** ↑:

```
6 3 0 1 L E D   1
```

Allocations for LED 1

The complete pre-settings for LED indicators are listed in Table 5.5.

Addr	1st display line	2nd display line	FNo	Remarks
6300	MARSHALLING	LEDs		Heading of the address block
6301	LED 1 LED 1	BFP-Start nm	473	Start of breaker failure protection
6302	LED 2 LED 2	BFP CrossTrip m	506	Local trip command by breaker failure protection
6303	LED 3 LED 3	BFP Trip BB m	507	Bus-bar trip command by breaker failure protection
6304	LED 4 LED 4	BFP TransTrip m	508	Transfer trip command by breaker failure protection
6305	LED 5 LED 5	BFP block nm	509	Breaker failure protection is blocked
6306	LED 6 LED 6 LED 6	Failure ΣI nm Failure Isymm nm	151 154	Failure or disturbance in measured quantities

Table 5.5 Preset LED indicators

5.5.5 Marshalling of the command (trip) relays – address block 64

The unit contains 5 trip relays which are designated TRIP RELAY 1 to TRIP RELAY 5. The trip relays can be marshalled in the address block 64. The block is reached by paging in blocks with ⇑ ⇓ or by directly addressing with **DA**, input of the address number **6 4 0 0** and pressing the enter key **E**. The selection procedure is carried out as described in Section 5.5.1. Multiple commands are possible, i.e. one logical command function can be given to several trip relays (see also Section 5.5.1).

Principally, all annunciation functions in accordance with Table 5.3, can be marshalled to output command relays.

The assignment of the trip relays as delivered from factory is shown in the general diagrams in Appendix A. The following boxes show an example for marshalling of trip relay 3. Table 5.6 shows all trip relays as preset from the factory.

Important note: With single-pole trip it is imperative that for each circuit breaker pole the corresponding phase segregated command, e.g. "`BFP Trip L1`" (FNo `502`) for pole L1, as also the three-pole command "`BFP Trip L123`" (FNo `505`) is marshalled to the correct tripping relay. This is taken care of in the presetting of the relay but must also be considered if the allocation of the trip relays is altered.

If several protection functions shall trip the same breaker pole, each command relay must be triggered by the corresponding command function.

Attention! The trip relays 1 and 2 are included in the trip release concept of the protection device (refer Section 4.2.7 for explanations). The allocation of these trip relays should not be changed unless this concept is comprehensively clear, and only in harmony with this concept.

```
6 4 0 0 MARSHALLING
TRIP RELAYS
```

Beginning of the block "Marshalling of the trip relays"

The first trip relay is reached with the key ↑:

```
6 4 0 1 TRIP
RELAY 1
```

Allocations for trip relay 1

Trip relay 3 is an example for a group command, i.e. multiple logical commands are assigned to this trip relay. You can scroll on with ↑, until trip relay 3 appears:

```
6 4 0 3 TRIP
RELAY 3
```

Allocations for trip relay 3

Change over to the selection level with **F** ↑:

```
0 0 1 TRIP REL. 3
BFP Trip L1
```

Trip relay 3 has been preset for:
1st: Trip command for the local (feeder) circuit breaker pole L1, single-pole, FNo 502;

```
0 0 2 ▮ T R I P   R E L .   3
B F P   T r i p   L 1 2 3
```

Trip relay 3 has been preset for:
1st: Trip command for the local (feeder) circuit, three-pole, FNo 505;

```
0 0 3 ▮ T R I P   R E L .   3
P o l e D i s .   T r i p
```

Trip relay 3 has been preset for:
3rd: Trip command from pole discrepancy supervision, FNo 610;

```
0 0 4 ▮ T R I P   R E L .   3
n o t   a l l o c a t e d
```

no further functions are preset for trip relay 1

Leave the selection level with key combination **F** ↑. You can go then to the next trip relay with the arrow key ↑.

```
6 4 0 3 ▮ T R I P
R E L A Y   3
```

Allocations for trip relay 3

Addr	1st display line	2nd display line	FNo	Remarks
6400	MARSHALLING	TRIP RELAYS		Heading of the address block
6401	TRIP TRIP REL. 1	RELAY 1 [1] BFP Bus Trip	 507	Bus-bar trip command by breaker failure protection [1]
6402	TRIP TRIP REL. 2	RELAY 2 [1] BFP TransTrip	 508	Transfer trip command by breaker failure protection [1]
6403	TRIP TRIP REL. 3 TRIP REL. 3 TRIP REL. 3	RELAY 2 BFP Trip L1 BFP Trip L123 PoleDis. Trip	 502 505 610	Local trip commands for the individual breaker poles (feeder breaker)
6404	TRIP TRIP REL. 4 TRIP REL. 4 TRIP REL. 4	RELAY 2 BFP Trip L2 BFP Trip L123 PoleDis. Trip	 503 505 610	
6405	TRIP TRIP REL. 5 TRIP REL. 5 TRIP REL. 5	RELAY 2 BFP Trip L3 BFP Trip L123 PoleDis. Trip	 506 505 610	

[1]) Trip relays 1 and 2 should not be altered (see **Attention** above in this section).

Table 5.6 Preset command functions for trip relays

5.6 Configuration parameters for localized substation automation – address block 69

The unit must be informed as to whether it is used as a component in a localized substation automation system or not. If a central unit is not connected, no further information is required, since the unit is preset to “LSA = *NON–EXIST*”.

Otherwise block 69 contains several questions which must be answered. For this, the codeword must be entered (refer Section 5.3.1). The entered data must be coordinated with the central unit. They refer to the Baud-rate of the serial data transfer. The identification address of the individual device and its measurement and fault data has been parameterized under addresses 7009 and 7010 (refer Section 5.3.2).

They are valid also for identification of the device in the control centre.

Block 69 can be called-up by paging with keys ⇑ ⇓ or by directly addressing with **DA 6 9 0 0 E**.

In addition, annunciations and messages which should be transmitted to the control centre must be coordinated with the central station. All annunciations which can be processed by the LSA are stored within the device in a separate table. For allocation of LSA–compatible annunciations, Table 5.7 is valid.

```
6 9 0 0 L S A -
C O N F I G U R A T I O N
```

Beginning of the block “Localized substation automation (LSA coupling)”

```
6 9 0 2 B A U D R A T E
  9 6 0 0  B A U D
  4 8 0 0  B A U D
1 9 2 0 0  B A U D
```

Baudrate for serial interface.
Available settings: *9600 BAUD* or *4800 BAUD* or *19200 BAUD*

Note for LSA: The parameters DEVICE ADDress and FEEDER ADDress which had been entered to the device under this item are now set in the address block 70 when setting the operating parameters, refer Section 5.3.2. They are valid for the operation interface for operation with a personal computer as well as for the LSA interface. If the device is connected to a central control station then these parameters should now be rechecked:

Address	7009	DEVICE ADD	0 to 255
Address	7010	FEEDER ADD	0 to 255

The following measured values are transmitted:
Measured value: current in phase L1
Measured value: current in phase L2
Measured value: current in phase L3
Measured value: earth current

FNo LSA	Annunciation	corresponding Annunc. FNo
011	User definable annunciation 1	21
012	User definable annunciation 2	22
013	User definable annunciation 3	23
014	User definable annunciation 4	24
020	General fault detection signal from feeder protection	70
021	Earth fault detection signal from feeder protection	71

Table 5.7 Annunciations for localized substation automation with associated function numbers FNo (continued next page)

FNo LSA	Annunciation	corresponding Annunc. FNo
022	General trip signal from feeder protection	72
023	Trip signal three-pole from feeder protection	73
024	Trip signal L1 from feeder protection	74
025	Trip signal L2 from feeder protection	75
026	Trip signal L3 from feeder protection	76
027	Block breaker failure protection	77
028	Circuit breaker defective from circuit breaker	78
041	Relay operative	101
042	Re-start of the processor system	102
043	Fault in the network	103
046	LED indicators reset	106
049	Relative time response to LSA	109
050	Parameters are being set	110
056	Parameter Set A is activated	116
057	Parameter Set B is activated	117
058	Parameter Set C is activated	118
059	Parameter Set D is activated	119
061	Failure in 18 V internal dc supply	121
062	Failure in 15 V internal dc supply	122
063	Failure in 5 V internal dc supply	123
064	Failure in 0 V A/D converter	124
065	Failure in base input/output module	125
071	Annunciations lost (buffer overflow)	131
074	Annunciation for LSA lost	134
081	Failure supervision ΣI (measured currents)	151
084	Failure supervision symmetry I	154
135	Interrupted current I_{L1}	255
136	Interrupted current I_{L2}	256
137	Interrupted current I_{L3}	257
140	General trip signal	470
101	Breaker failure protection switched off	471
102	Breaker failure protection initiated (signal from feeder protection)	472
143	Breaker failure protection started	473
144	Start of breaker failure protection for pole L1	474
145	Start of breaker failure protection for pole L2	475
146	Start of breaker failure protection for pole L3	476
150	Any delay time is running	500
151	Trip breaker failure protection during defect of the feeder breaker	501
152	Trip by breaker failure protection pole L1 (1st stage)	502
153	Trip by breaker failure protection pole L2 (1st stage)	503
154	Trip by breaker failure protection pole L3 (1st stage)	504
155	Trip by breaker failure protection three-pole (1st stage)	505
156	Trip breaker failure protection on local feeder breaker (1st)	506
157	Trip breaker failure protection on bus-bar breakers (2nd)	507
158	Transfer trip signal of breaker failure protection	508
109	Breaker failure protection blocked	509
160	Delay time T1 after single-pole trip expired	510
161	Delay time T1 after three-pole trip expired	511
162	Delay time T2 with current detection expired	512
163	Delay time T2 with CB auxiliary contact interrogation expired	513
164	Delay time for end fault protection expired	514
165	Delay time with defective circuit breaker expired	515
116	Release signal from hard-ware monitor present	516
120	Pole discrepancy supervision is switched off	600
171	Pole discrepancy supervision started (general)	601
172	Pole discrepancy supervision started for pole L1	602
173	Pole discrepancy supervision started for pole L2	603
174	Pole discrepancy supervision started for pole L3	604
180	Trip by pole discrepancy supervision	610
252	Device drop-off	900

Table 5.7 Annunciations for localized substation automation with associated function numbers FNo

6 Operating instructions

6.1 Safety precautions

Warning

All safety precautions which apply for work in electrical installations are to be observed during tests and commissioning.

Caution!

Connection of the device to a battery charger without connected battery may cause impermissibly high voltages which damage the device. See also Section 3.1.1 under Technical data for limits.

6.2 Dialog with the relay

Setting, operation and interrogation of digital protection and automation systems can be carried out via the integrated membrane keyboard and display panel located on the front plate. All the necessary operating parameters can be entered and all the information can be read out from here. Operation is, additionally, possible via the interface socket by means of a personal computer or similar.

6.2.1 Membrane keyboard and display panel

The membrane keyboard and display panel is externally arranged similar to a pocket calculator. Figure 6.1 illustrates the front view.

A two-line, each 16 character, liquid crystal display presents the information. Each character comprises a 5 x 8 dot matrix. Numbers, letters and a series of special symbols can be displayed.

During dialog, the upper line gives a four figure number, followed by a bar. This number presents the **setting address**. The first two digits indicate the address **block**, then follows the two-digit **sequence number**. In models with parameter change-over facility, the identifier of the parameter set is shown before the setting address.

The keyboard comprises 28 keys with numbers, Yes/No and control buttons. The significance of the keys is explained in detail in the following.

Numerical keys for the input of numerals:

0 to 9	Digits 0 to 9 for numerical input
•	Decimal point
∞	Infinity symbol
+/–	Change of sign (input of negative numbers)

Yes/No keys for text parameters:

J/Y	Yes key: operator affirms the displayed question
N	No key: operator denies the displayed question or rejects a suggestion and requests for alternative

Keys for paging through the display:

↑	Paging forwards: the next address is displayed
↓	Paging backwards: the previous address is displayed
⇧	Block paging forwards: the beginning of the next address block is displayed
⇩	Block paging backwards: the beginning of previous address block is displayed

Confirmation key:

E	Enter or confirmation key: each numerical input or change via the Yes/No keys must be confirmed by the enter key; only then does the device accept the change. The enter key can also be used to acknowledge and clear a fault prompt in this display; a new input and repeated use of the enter key is then necessary.

Control and special keys:

CW	Codeword: prevents unauthorized access to setting programs (not necessary for call-up of annunciations or messages)
R	Backspace erasure of incorrect entries
F	Function key; explained when used
DA	Direct addressing: if the address number is known, this key allows direct call-up of the address
M/S	Messages/Signals: interrogation of annunciations of fault and operating data (refer Section 6.4)

The three keys ↑ ; ⇑ ; RESET which are somewhat separated from the rest of the keys, can be accessed when the front cover is closed. The arrows have the same function as the keys with identical symbols in the main field and enable paging in forward direction. Thus all setting values and event data can be displayed with the front cover closed. Furthermore, stored LED indications on the front can be erased via the RESET key without opening the front cover. During reset operation all LEDs on the front will be illuminated thus performing a LED test. With this reset, additionally, the fault event indications in the display on the front panel of the device are acknowledged; the display shows then the operational values of the quiescent state. The display is switched over to operating mode as soon as one of the keys **DA**, **M**/**S**, **CW** or ⇑ is pressed.

6.2.2 Operation with a personal computer

A personal computer allows, just as the operator panel, all the appropriate settings, initiation of test routines and read-out of data, but with the added comfort of screen-based visualization and a menu-guided procedure.

All data can be read in from, or copied onto, magnetic data carrier (floppy disc) (e.g. for settings and configuration). Additionally, all the data can be documented on a connected printer. It is also possible, by connecting a plotter, to print out the fault history traces.

For operation of the personal computer, the instruction manuals of this device are to be observed. The PC program DIGSI® is available for setting and processing of all digital protection data. Note that the operating interface in the front of the relay is not galvanically isolated and that only adequate connection cables are applied (e.g. 7XV5100–2). Further information about facilities on request.

6.2.3 Operational preconditions

For most operational functions, the input of a codeword is necessary. This applies for all entries via the membrane keyboard or front interface which concern the operation on the relay, for example

– setting of functional parameters (thresholds, functions),

– allocation or marshalling of trip relays, signals, binary inputs, LED indicators,

– configuration parameters for operation language and device configuration,

– initiation of test procedures.

The codeword is not required for the read-out of annunciations, operating data or fault data, or for the read-out of setting parameters.

The method of entry of the codeword is explained in detail in the installation instructions under Section 5.3.1.

6.2.4 Representation of the relay (front view)

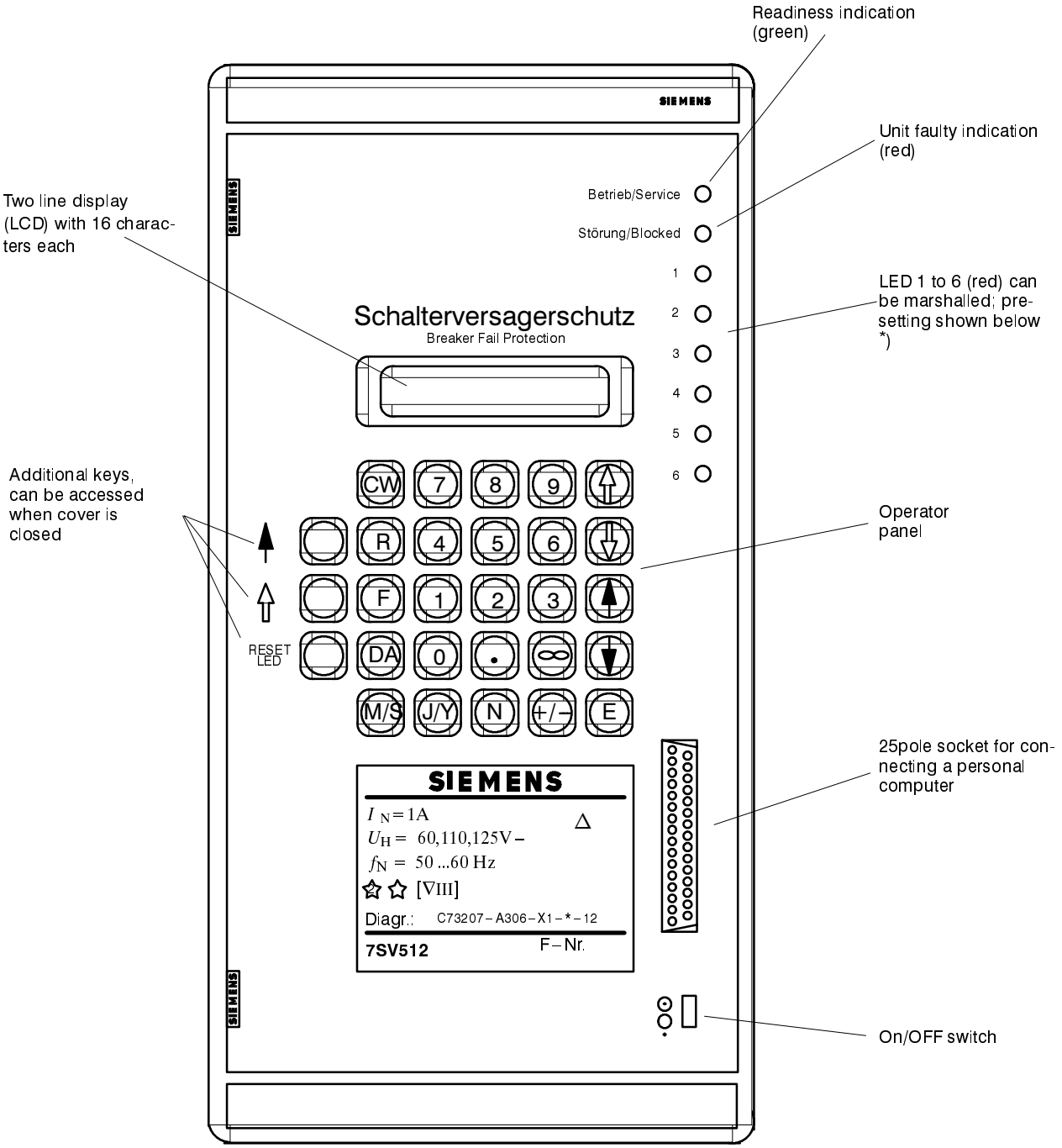

*) Factory presetting LEDs:

1 B/F protection start
2 B/F trip local breaker
3 B/F trip bus-bar breakers
4 B/F trip remote breaker (transmission)
5 B/F blocked
6 Measured values faulty

Figure 6.1 Front view of operating key board and display panel

6.3 Setting the functional parameters

6.3.1. Introduction

6.3.1.1 Parameterizing procedure

For setting the functional parameters it is necessary to enter the codeword (see 5.3.1). Without codeword entry, parameters can be read out but not be changed.

If the codeword is accepted, parameterizing can begin. In the following sections each address is illustrated in a box and is explained. There are three forms of display:

– Addresses without request for operator input

  The address is identified by the block number followed by 00 as sequence number (e.g. **11**00 for block **11**). Displayed text forms the heading of this block. No input is expected. By using keys ⇑ or ⇓ the next or the previous block can be selected. By using the keys ↑ or ↓ the first or last address within the block can be selected and paged.

– Addresses which require numerical input

  The display shows the four-digit address, i.e. block and sequence number (e.g. **1105** for block **11**, sequence number **5**). Behind the bar appears the meaning of the required parameter, in the second display line, the value of the parameter. When the relay is delivered a value has been preset. In the following sections, this value is shown. If this value is to be retained, no other input is necessary. One can page forwards or backwards within the block or to the next (or previous) block. If the value needs to be altered, it can be overwritten using the numerical keys and, if required, the decimal point and/or change sign (+/–) or, where appropriate, infinity sign ∞. The permissible setting range is given in the following text, next to the associated box. Entered values beyond this range will be rejected. The setting steps correspond to the last decimal place as shown in the setting box. Inputs with more decimal places than permitted will be truncated down to the permissible number. **The value must be confirmed with the entry key E!** The display then confirms the accepted value. The changed parameters are only saved after termination of parameterizing (refer below).

– Addresses which require text input

  The display shows the four-digit address, i.e. block and sequence number (e.g. **1201** for block **12**, sequence number **1**). Behind the bar appears the meaning of the required parameter, in the second display line, the applicable text. When the relay is delivered, a text has been preset. In the following sections, this text is shown. If it is to be retained, no other input is necessary. One can page forwards or backwards within the block or to the next (or previous) block. If the text needs to be altered, press the "No" key **N**. The next alternative text, also printed in the display boxes illustrated in the following sections, then appears. If the alternative text is not desired, the **N** key is pressed again, etc. The alternative which is chosen, **is confirmed with the entry key E.** The changed parameters are only saved after termination of parameterizing (refer below).

For each of the addresses, the possible parameters and text are given in the following sections. If the meaning of a parameter is not clear, it is usually best to leave it at the factory setting. The arrows ⇑⇓ or ↑↓ at the left hand side of the illustrated display boxes indicate the method of moving from block to block or within the block. Unused addresses are automatically passed over.

If the parameter address is known, then direct addressing is possible. This is achieved by depressing key **DA** followed by the four-digit address and subsequently pressing the enter key **E**. After direct addressing, paging by means of keys ⇑ ⇓ and keys ↑ ↓ is possible.

The setting procedure can be ended at any time by the key combination **F E**, i.e. depressing the function key **F** followed by the entry key **E**. The display shows the question "SAVE NEW SETTINGS?". Confirm with the "Yes"–key **Y** that the new settings shall become valid now. If you press the "No"–key **N** instead, codeword operation will be aborted, i.e. all alterations which have been changed since the last codeword entry are lost. Thus, erroneous alterations can be made ineffective.

If one tries to leave the setting range for the functional parameter blocks (i.e. address blocks 10 to 39) with keys ⇑ ⇓, the display shows the question “END OF CODEWORD OPERATION ?”. Press the “No”–key **N** to continue parameterizing. If you press the “Yes”–key **J/Y** instead, another question appears: “SAVE NEW SETTINGS ?”. Now you can confirm with **J/Y** or abort with **N**, as above.

After completion of the parameterizing process, the changed parameters which so far have only been stored in volatile memory, are then permanently stored in EEPROMs. The display confirms “NEW SETTINGS SAVED”. After pressing the key **M/S** followed by **RESET LED**, the indications of the quiescent state appear in the display.

6.3.1.2 Selectable parameter sets

Up to 4 different sets of parameters can be selected for the functional parameters, i.e. the addresses above 1000 and below 4000. These parameter sets can be switched over during operation, locally using the operator panel or via the operating interface using a personal computer, or also remotely using binary inputs.

If this facility is not used then it is sufficient to set the parameters for the preselected set. The rest of this section is of no importance. Otherwise, the parameter change-over facility must be configured as *EXIST* under address 7885 (refer Section 5.4.2). The first parameter set is identified as set A, the other sets are B, C and D. Each of these sets is adjusted one after the other.

If the switch-over facility is to be used, first set all parameters for the normal status of parameter set A. Then switch over to parameter set B:

– Fist complete the parameterizing procedure for set A as described in Section 6.3.1.1.

– Press key combination **F 2**, i.e. first the function key **F** and then the number key **2**. All following inputs then refer to parameter set B.

All parameter sets can be accessed in a similar manner:

- Key combination **F 1**:
  access to parameter set **A**
- Key combination **F 2**:
  access to parameter set **B**
- Key combination **F 3**:
  access to parameter set **C**
- Key combination **F 4**:
  access to parameter set **D**

Input of the codeword is again necessary for the setting of a new selected parameter set. Without input of the codeword, the settings can only be read but not modified.

Since only a few parameters will be different in most applications, it is possible to copy previously stored parameter sets into another parameter set.

It is additionally possible to select the original settings, i.e. the settings preset on delivery, for a modified and stored parameter set. This is done by copying the “ORIG.SET” to the desired parameter set.

It is finally still possible to define the active parameter set, i.e. the parameter set which is valid for the functions and threshold values of the unit. See Section 6.5.4 for more details.

The parameter sets are processed in address block 85. The most simple manner to come to this block is using direct addressing:

– press direct address key **DA**,
– enter address, e.g. **8 5 0 0**,
– press enter key **E**.

The heading of the block for processing the parameter sets then appears.

It is possible to scroll through the individual addresses using the ↑ key. The copying facilities are summarized in Table 6.1.

⇑ 8 5 0 0 ▮ P A R A M E T E R ⇓ C H A N G E - O V E R	Beginning of the block “Parameter change-over”; processing of parameter sets

Addr.	Copy from	Copy to
8510	ORIG.SET	SET A
8511	ORIG.SET	SET B
8512	ORIG.SET	SET C
8513	ORIG.SET	SET D
8514	SET A	SET B
8515	SET A	SET C
8516	SET A	SET D
8517	SET B	SET A
8518	SET B	SET C
8519	SET B	SET D
8520	SET C	SET A
8521	SET C	SET B
8522	SET C	SET D
8523	SET D	SET A
8524	SET D	SET B
8525	SET D	SET C

Table 6.1 Copying parameter sets

Following copying, only such parameters need be changed which are to be different from the source parameter set.

Parameterizing must be terminated for each parameter set as described in Section 6.3.1.1.

6.3.1.3 Setting of date and time

The date and time can be set if the unit is equipped with the real time clock. Setting is carried out in block 81 which is reached by direct addressing **DA 8 1 0 0 E** or by paging with ⇑ and ⇓. Input of the codeword is required to change the data.

Selection of the individual addresses is by further scrolling using ↑ ↓ as shown below. Each modification must be confirmed with the enter key **E**.

The date and time are entered with dots as separator signs since the keyboard does not have a colon or slash (for American date).

The clock is synchronized at the moment when the enter key **E** is pressed following input of the complete time. The difference time facility (address 8104) enables exact setting of the time since the difference can be calculated prior to the input, and the synchronization of the clock does not depend on the moment when the enter key **E** is pressed.

```
8 1 0 0 S E T T I N G
R E A L  T I M E  C L O C K
```

Beginning of the block “Setting the real time clock” Continue with ↑.

```
2 6 . 0 7 . 1 9 9 3
1 3 : 5 3 : 4 3
```

At first, the actual date and time are displayed. Continue with ↑.

```
8 1 0 2 D A T E
```

Enter the new date: 2 digits for day, 2 digits for month and 4 digits for year (including century); use the order as configured under address 7003 (section 5.3.2), but always use a dot for separator:
DD.MM.YYYY or **MM.DD.YYYY**

```
8 1 0 3 T I M E
```

Enter the new time: hours, minutes, seconds, each with 2 digits, separated by a dot:
HH.MM.SS

```
8 1 0 4 D I F F .  T I M E
```

Using the difference time, the clock is set forwards by the entered time, or backwards using the **+/–** key. The format is the same as with the time setting above.

6.3.2 Initial displays – address blocks 00 and 10

When the relay is switched on or the operator terminal has been connected, firstly the address 0000 and the type identification of the relay appears. All Siemens relays have an MLFB (machine readable type number). When the device is operative and displays a quiescent message, any desired address can be reached e.g. by pressing the direct address key **DA** followed by the address number.

```
0 0 0 0 7 S V 5 1 2 V 1 . *
7 S V 5 1 2 * * * * * * * * *
*
```

The relay introduces itself by giving its type number and the version of firmware with which it is equipped. The second display line shows the complete ordering designation.

After address 1000, the functional parameters begin. Further address possibilities are listed under “Annunciations” and “Tests”.

```
1 0 0 0
P A R A M E T E R S
```

Commencement of functional parameter blocks

6.3.3 Power system data – address block 11

The relay requests basic data of the power system and the switchgear. The rated current (address 1105) is of no concern for the actual protection functions of the device but is used for the calculation of the operational measured values (refer Section 6.4).

```
1 1 0 0
P O W E R S Y S T E M   D A T A
```

Beginning of the block “Power system data”

```
1 1 0 5 I n   P R I M A R Y
4 0 0   A
```

Current transformer primary rated current (phases)
Smallest setting value: **10** A
Largest setting value: **50000** A

With address 1112, the device is instructed as to how the earth current input of the relay is connected. This information is important for the monitoring of measured values.

Two possibilities exist for the earth current path:

– Connection of the earth current from the star point of the current transformers (standard circuit arrangement, see also Appendix B, Figure B.2):

  Address 1112 is then set as Ie/Iph = 1.00

– Connection of the earth current from a separate earth current detection transformer (e.g. summation current transformer, see also Appendix B, Figure B.4).

Address 1112 is then set as

$$Ie/Iph = \frac{\text{ratio of the earth current CT}}{\text{ratio of the phase current CT}}$$

Example:

Phase current transformers	400A/5A
Summation transformer	60A/1A

$$Ie/Iph = \frac{60/1}{400/5} = 0.75$$

Under address 1115, the minimum trip command duration can be set. This time is then valid for all protection functions of the device which can issue a trip signal.

```
  1 1 1 2 Ie / I p h
1 . 0 0
```

Matching factor for earth current:

1.00 for connection in c.t. starpoint;

$$\frac{\text{summation (earth) c.t. ratio}}{\text{(phase) c.t. ratio}}$$

for connection to separate earth current transformer

Smallest setting value:	**0.10**
Largest setting value:	**20.00**

```
  1 1 1 5 T - T R I P
0 . 1 0   s
```

Minimum duration of trip command

Smallest setting value:	**0.00** s
Largest setting value:	**32.00** s

6.3.4 Settings for circuit breaker failure protection – address block 12

Different possibilities exist for the initiation of the breaker failure protection:

– Initiation by the trip command of the feeder protection. The trip command may be single-pole or three-pole. In each case, current flow through each of the breaker poles is monitored individually. The current threshold I–BF (address 1202) shall be selected such that the protection will operate at the smallest expected short-circuit current. To be sure of this, the value should be 10 % less than the minimum anticipated fault current. On the other hand, the value should not be set lower than necessary.

– Initiation by the trip command of a protection or supervision device which does not necessarily react to short-circuit current (e.g. Buchholz protection, overvoltage protection). The circuit breaker auxiliary contacts are the criteria for the breaker reaction in this case. Depending on the connection of the auxiliary contacts, the breaker can be supervised three-pole or on a pole-segregated three-pole basis.

– Initiation by the trip command of a bus-bar protection. This corresponds to a three-pole trip command of the first possibility. In case of breaker failure, the trip command must be transmitted to the remote end circuit breaker via a communication link to ensure proper clearance of the fault.

The breaker failure protection 7SV512 can be operated single-stage or two-stage:

With two-stage operation, the trip command is repeated after a time delay T1 to the local feeder breaker, normally to a different set of tripping coils of this breaker. A choice can be made whether this trip repetition shall be single-pole or three-pole if the initial feeder protection trip was single-pole; this choice is made in address 1204. After a further delay time T2 (address 1212 or 1213), the adjacent circuit breakers (i.e. the breakers of the bus-bar zone and – if signal transmission is possible – the breaker at the remote end) are tripped provided the fault has not yet been cleared. An example of the time sequence is illustrated in Figure 6.2.

With single-stage operation, the adjacent circuit breakers (i.e. the breakers of the bus-bar zone and – if transmission of the signal is possible – the breaker at the remote end) are tripped after a delay time T2 following initiation. The local trip command is switched off under address 1203 in this case. An example of the time sequence is illustrated in Figure 6.3.

Separate delay times can be set:

– for single- or three-pole trip repetition to the local feeder circuit breaker after **single**-pole trip of the feeder protection under address 1205 T1–1POLE.

– for three-pole trip repetition to the local feeder circuit breaker after **three**-pole trip of the feeder protection under address 1206 T1–3POLE.

– for trip of the adjacent circuit breakers (bus-bar zone and remote end if applicable) when using current detection as breaker failure criterion, under address 1212 T2–CURRENT,

– for trip of the adjacent circuit breakers (bus-bar zone and remote end if applicable) when using the breaker auxiliary contacts as breaker failure criterion, under address 1213 T2–CB–AUX.

The delay times are determined from the maximum operating time of the feeder circuit breaker, the reset time of the current detectors of the breaker failure protection, plus a safety margin which allows for any tolerance of the delay timers. The time sequence is illustrated in Figure 6.2 for two-stage breaker failure protection, and in Figure 6.3 for single-stage breaker failure protection.

For sinusoidal currents one can assume that the reset time of the current detectors is less than 10 ms but if current transformer saturation is expected then 20 ms should be calculated.

With two-stage breaker failure protection, a choice can be made whether the timers T2 for trip of the adjacent breakers will be started at the instant of trip repetition, i.e. after expiry of T1 (the solid line in Figure 6.2), of whether it will be started already with the trip command of the main protection (dotted line in Figure 6.2 is also part of T2), i.e. T2 includes T1 (address 1211).

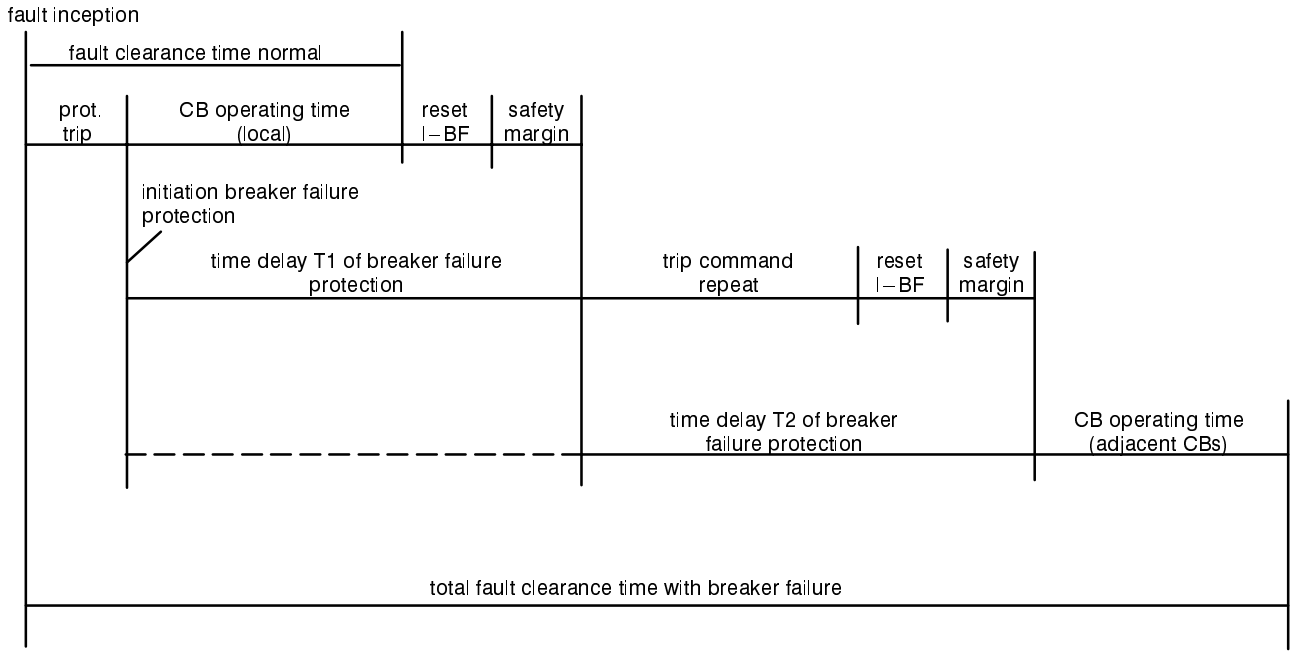

Figure 6.3 Time sequence example for normal clearance of a fault, and with circuit breaker failure, using two-stage breaker failure protection

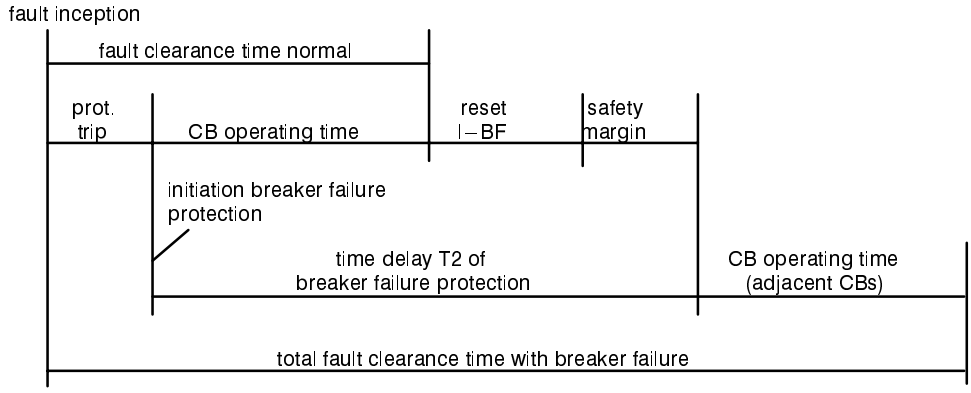

Figure 6.2 Time sequence example for normal clearance of a fault, and with circuit breaker failure, using single-stage breaker failure protection

If the circuit breaker associated with the feeder is not operative (e.g. control voltage failure or air pressure failure), it is clear that the breaker cannot clear the fault. Time delay for tripping the adjacent breakers is not necessary in this case. If the relay is informed about this disturbance (via the binary input "`>CB defect`", the adjacent circuit breakers (bus-bar and remote end if applicable) are tripped after the time T3 CB–DEF (address 1214) which is normally set to 0.

```
  1 2 0 0 B R E A K E R
F A I L U R E   P R O T .
```

Beginning of the block “Circuit breaker failure protection”

```
  1 2 0 1 B R E A K   F A I L
O N
```

```
O F F
```

Circuit breaker failure protection is

ON switched on

OFF switched off

```
  1 2 0 2 I - B F
0 . 1 0   I / I n
```

Pick-up value of the current detector of the breaker failure protection

Smallest setting value: **0.05** I_N

Largest setting value: **4.00** I_N

```
  1 2 0 3 T R I P   C R o f f
N O
```

```
Y E S
```

Trip signal repetition to the local feeder circuit breaker (cross trip) is switched off

NO after T1 (two-stage breaker failure protection) cross trip will be initiated

YES cross trip is switched off (single-stage breaker failure protection)

```
  1 2 0 4 T R I P   1 P O L E
Y E S
```

```
N O
```

Single-pole trip signal repetition to the local feeder breaker after single-pole trip of the feeder protection

YES is permitted provided the feeder protection has issued a single-pole trip signal

NO is not permitted: always three-pole trip by the breaker failure protection

```
  1 2 0 5 T 1 - 1 P O L E
0 . 0 0   s
```

Delay time for trip signal repetition to the local feeder breaker after single-pole trip command of the feeder protection

Smallest setting value: **0.00** s

Largest setting value: **32.00** s

or ∞, i.e. no trip in this case

```
  1 2 0 6 T 1 - 3 P O L E
0 . 0 0   s
```

Delay time for trip signal repetition to the local feeder breaker after three-pole trip command of the feeder protection

Smallest setting value: **0.00** s

Largest setting value: **32.00** s

or ∞, i.e. no trip in this case

```
  1 2 1 1 T - T R I P - B B
T 1   +   T 2
```

```
T 2
```

The total delay time of the trip signal to the adjacent circuit breakers (bus-bar zone and remote end if applicable)

T1+T2 is composed of T1 (address 1205 or 1206) and T2 (address 1212 or 1213); i.e. T2 is started after expiry of T1

T2 is equal T2 (address 1212 or 1213); i.e. T2 is started with trip command of the feeder protection

```
  1 2 1 2 T 2 - C U R R E N T
0 . 1 5   s
```

Delay time of the trip signal to the adjacent breakers (bus-bar and, if applicable, remote end) if current flow (address 1202) is breaker failure criterion
Smallest setting value: **0.00** s
Largest setting value: **32.00** s
or ∞, i.e. no trip in this case

```
  1 2 1 3 T 2   C B - A U X .
0 . 1 5   s
```

Delay time of the trip signal to the adjacent breakers (bus-bar and, if applicable, remote end) if breaker auxiliary contacts are the breaker failure criterion
Smallest setting value: **0.00** s
Largest setting value: **32.00** s
or ∞, i.e. no trip in this case

```
  1 2 1 4 T 3   C B - D E F .
0 . 0 0   s
```

Delay time of the bus-trip signal to the adjacent breakers (bus-bar and, if applicable, remote end) if the local feeder breaker is defective
Smallest setting value: **0.00** s
Largest setting value: **32.00** s
or ∞, i.e. no trip in this case

The delay time of the end fault protection is set under address 1220. An end fault is a short-circuit between the circuit breaker and the current transformer set of the feeder.

If, during an end fault, the circuit breaker is tripped by a reverse fault stage of the feeder protection or by the bus-bar protection (the fault is a bus-bar fault as determined from the location of the current transformers), the fault current will continue, because it is fed from the remote end of the feeder circuit.

The time T–ENDFAULT (address 1220) is started when, during fault detection conditions of the feeder protection, the circuit breaker auxiliary contacts indicate open poles and, at the same time, current flow is detected (address 1202). The trip command of the end fault protection is intended for the transmission of an intertrip signal to the remote end circuit breaker.

Thus, the delay time is set such that it can bridge out short transient end fault conditions which may occur during switching of the breaker.

```
  1 2 2 0 T - E N D F A U L T
0 . 1 0   s
```

Delay time for end faults until trip signal for transmission to the remote end is generated
Smallest setting value: **0.00** s
Largest setting value: **32.00** s
or ∞, i.e. no trip in this case

In order to meet the high safety requirement of the circuit breaker failure protection, comprehensive monitoring facilities and plausibility checks have been incorporated to the 7SV512 relay. For details refer to Section 4.2.7.

A pre-condition for the correct operation of some of these monitoring and plausibility check functions is, that the relay is connected according to a certain connection scheme. If the binary inputs and outputs are assigned as delivered and if the relay is connected according the connection diagram in Appendix B, all check functions are optimized to match each other and the safety requirements.

In those cases where the pre-conditions of one or the other plausibility check cannot be fulfilled because of the physical arrangement of the substation components (e.g. if the earth current of the feeder is not available), reaction of some plausibility checks can be matched to the physical connection in addresses 1221 to 1223.

If, for example, the assignment of the binary inputs and trip relays has been changed for some reason, it may be necessary to avoid blocking of the breaker failure protection by the current summation monitor or the hard-ware supervision, in address 1221.

In order to bridge out transient phenomena during which the plausibility conditions are violated for short time periods (e.g. the current sum condition during current transformer saturation), the blocking of the breaker failure protection can be delayed under address 1222.

One important plausibility check of the breaker failure protection is the 2-out-of-4 condition on the pick-up of the current detectors. But this can only operate if all three phase currents and the residual (earth) current are introduced to the relay. If this four-current-connection is not possible for external reasons, the breaker failure protection function itself calculates the negative sequence current from the phase currents and uses this as the fourth criterion in the 2-out-of-4 check. If the earth current is not connected to the relay, address 2123 PLAUS 1POLe must be set to *NEG.SEQ. CURRENT*. Otherwise current detection would not be possible!

```
  1 2 2 1 B L O C K   M O N
Y E S
```

```
N O
```

Pick-up of the current sum monitor or hard-ware monitor blocks the breaker failure protection

YES or

NO

```
  1 2 2 2 T - B L O C K M O N
5 . 0 0   s
```

Delay time for blocking of the breaker failure protection when the current sum monitor or the hard-ware monitor has picked up (provided address 1221 is set to *YES*)

Smallest setting value: **0.05** s
Largest setting value: **32.00** s
or ∞, i.e. no blocking

```
  1 2 2 3 P L A U S   1 P O L
R E S I D U A L   C U R R E N T
```

```
N E G . S E Q .   C U R R E N T
```

Plausibility check for single-phase current detection is performed with the

RESIDUAL CURRENT i.e. the earth current connected to the relay terminals or

*NEG*ative *SEQ*uence *CURRENT* which is calculated from the phase currents

---

6.3.5 Settings for fault recording – address block 28

The relay is equipped with fault data storage (see Section 4.5.2). This function can only be effective if the configuration parameter (address 7828) of fault recording has been set to *EXIST* (Section 5.4.2).

The fault data storage can be initiated either with each start of the breaker failure protection or only by a trip. In the latter case the trip must occur within the recording time T–REC, which is settable (address 2802). Additionally, one can select whether the data of the fault data record shall be output to the operator interface on the front *PC/PD* or to the LSA–interface *LSA*.

```
2 8 0 0
F A U L T   R E C O R D I N G S
```

Beginning of block “Fault recordings”

```
2 8 0 1  F A U L T   R E C .
O N
O F F
```

Fault recording is

ON switched on

OFF switched off

```
2 8 0 2  I N I T I A T I O N
B Y   F A U L T   D E T E C .
B Y   T R I P   < T - R E C
```

Initiation of fault record storage

– *BY* each *FAULT DETEC*tion

– *BY TRIP* command < *T–REC,* i.e. trip within a time *T–REC* (address 2804)

```
2 8 0 3  F A U L T   R E C .
T O   P C / P D
T O   L S A
```

TO PC/PD – Fault records are routed to the operating interface connector at the front (e.g. personal computer)

TO LSA – Fault records are routed to the LSA interface connector

```
2 8 0 4  T - R E C
0 . 3 0   s
```

Time period within which trip command must have been issued so that a fault record is stored (address 2802)

Smallest setting value: **0.01** s

Largest setting value: **2.50** s

6.3.6 Settings for measured value monitoring – address block 29

The different monitoring functions of the protective relay are described in Section 4.5.4. They partly monitor the relay itself and partly the steady-state measured values of the transformer circuits.

The sensitivity of the measured value monitoring can be changed in block 29. The factory settings are suitable in most cases. If particularly high operational asymmetries of the currents are expected, or if, during operation, one or more monitoring functions reacts sporadically, then sensitivity should be reduced.

NOTE: Prerequisite for correct functioning of the measured value monitors is the proper setting of the general power system data (Section 6.3.3), especially the parameters concerning earth current matching.

```
2900 MEAS.VALUE
SUPERVISION
```

Beginning of block “Measured value supervision”

```
2903 SYM.Ithres
0.50  I/In
```

Current threshold above which the symmetry monitoring is effective (refer to Figure 4.21)
Smallest setting value: **0.10** $\cdot I_N$
Largest setting value: **1.00** $\cdot I_N$

```
2904 SYM.Fact.I
0.50
```

Symmetry factor for the current symmetry = slope of the symmetry characteristic (see Figure 4.21)
Smallest setting value: **0.10**
Largest setting value: **0.95**

```
2905 SUM.Ithres
0.10  I/In
```

Current threshold above which the summation monitoring (refer to Figure 4.20) reacts (absolute content, referred to I_N only)
Smallest setting value: **0.05** $\cdot I_N$
Largest setting value: **2.00** $\cdot I_N$

```
2906 SUM.Fact.I
0.10
```

Relative content (related to the maximum conductor current) for operation of the current summation monitoring (refer Figure 4.20)
Smallest setting value: **0.00**
Largest setting value: **0.95**

6.3.7 Settings for breaker pole discrepancy supervision – address block 38

A precondition for the correct operation of the pole discrepancy supervision is that this function is configured as *EXIST* under address 7838 (refer Section 5.4.2).

The pole discrepancy supervision avoids that only one or two poles of the feeder circuit breaker is open continuously. Either the auxiliary contacts of each individual breaker pole or a series and parallel connection of the auxiliary contacts must be connected to binary inputs of the device, for this task.

The delay time T–DISCREP (address 3802) determines how long time a breaker pole discrepancy condition of the feeder circuit breaker, i.e. only one or two poles open, may be present before the pole discrepancy supervision issues a three-pole trip command. The time must clearly be longer than the duration of a single-pole auto-reclose cycle. The time may be limited by the permissible duration of an unbalanced load condition which is caused by the unsymmetrical position of the circuit breaker poles. Conventional values are 2 s to 5 s.

```
3 8 0 0 POLE
DISCREPANCY
```

Beginning of the block “Pole discrepancy supervision”

```
3 8 0 1 POLE-DISCR
ON
```

```
OFF
```

Pole discrepancy supervision is

ON switched on

OFF switched off

```
3 8 0 2 T-DISCREP
2.00 s
```

Delay time for three-pole trip by the pole discrepancy supervision

Smallest setting value:	**0.00**	s
Largest setting value:	**32.00**	s

or ∞, i.e. no trip in this case

6.4 Annunciations

6.4.1 Introduction

After a network fault, annunciations and messages provide a survey of important fault data and the function of the relay, and serve for checking sequences of functional steps during testing and commissioning. Further, they provide information about the condition of measured data and the relay itself during normal operation.

To read out recorded annunciations, no codeword input is necessary.

The annunciations generated in the relay are presented in various ways:

– LED indications in the front plate of the relay (Figure 6.1),

– Binary outputs (output relays) via the connections of the relay,

– Indications in the display on the front plate or on the screen of a personal computer, via the operating interface,

– Transmission via the serial interface to local or remote control facilities (optional).

Most of these annunciations can be relatively freely allocated to the LEDs and binary outputs (see Section 5.5). Also, within specific limitations, group and multiple indications can be formed.

To call up annunciations on the operator panel, the following possibilities exist:

– Block paging with the keys ⇑ forwards or ⇓ backwards up to address 5000,

– Direct selection with address code, using key **DA**, address **5 0 0 0** and execute with key **E**,

– Press key **M/S** (M stands for “messages”, S for “signals”); then the address 5000 appears automatically as the beginning of the annunciation blocks.

For configuration of the transfer of annunciations to a central processing device or localized substation automation system, the necessary data are entered in block 69 (see Section 5.6).

The annunciations are arranged as follows:

Block 51 Operational annunciations; these are messages which can appear during the operation of the relay: information about condition of relay functions, measurement data etc.

Block 52 Event annunciations for the last fault; pick-up, trip, or similar.

Block 53 Event annunciations for the previous network fault, as block 52.

Block 54 Event annunciations for the last but two network fault, as block 52.

Block 56 Annunciations for CB operation statistics, that is counters for tripping commands, together with accumulated short circuit currents of each breaker pole.

Block 57 Indication of operational measured values (currents).

Commencement of “annunciation blocks”

A comprehensive list of the possible annunciations and output functions with the associated function number FNo is given in Appendix C. It is also indicated to which device each annunciation may be routed.

6.4.2 Operational annunciations – address block 51

Operational and status annunciations contain information which the unit provides during operation and about the operation. They begin at address 5100. Important events and status changes are chronologically listed, starting with the most recent message. Time information is shown in hours and minutes. Up to 50 operational indications can be stored. If more occur, the oldest are erased in sequence.

Faults in the network are only indicated as "`System Flt`" together with the sequence number of the fault. Detailed information about the history of the fault is contained in blocks "Fault annunciations"; refer Section 6.4.3.

The input of the codeword is not required.

After selection of the address 5100 (by direct selection with **DA 5 1 0 0 E** and/or paging with ⇑ or ⇓ and further scrolling ↑ or ↓) the operational annunciations appear. The boxes below show all available operational annunciations. In each specific case, of course, only the associated annunciations appear in the display.

Next to the boxes below, the abbreviated forms are explained. It is indicated whether an event is announced on occurrence (**C** = "**C**oming") or a status is announced "**C**oming" and "**G**oing" (**C**/**G**).

The first listed message is, as example, assigned with date and time in the first line; the second line shows the beginning of a condition with the character **C** to indicate that this condition occurred at the displayed time.

```
5 1 0 0 ▮ O P E R A T I O N A L
A N N U N C I A T I O N S
```

Beginning of the block "Operational annunciations"

```
2 8 . 0 7 . 9 3     1 2 : 4 3
L E D   r e s e t   : C
```

1st line: Date and time of the event or status change

2nd line: Annunciation text, in the example **C**oming

If the real time clock is not available the date is replaced by ★★.★★.★★, the time is given as relative time from the last re-start of the processor system.

Direct response from binary inputs:

`> S t a r t  F l t R e c`	Fault recording started via binary input (C)
`> C B  A u x .  L 1`	Circuit breaker auxiliary contact pole L1 closed (C/G)
`> C B  A u x .  L 2`	Circuit breaker auxiliary contact pole L2 closed (C/G)
`> C B  A u x .  L 3`	Circuit breaker auxiliary contact pole L3 closed (C/G)
`> C B  A u x .  3 p C`	Circuit breaker auxiliary contact all poles closed (C/G)
`> C B  A u x .  1 p C`	Circuit breaker auxiliary contact any pole closed (C/G)

> Annunc. 1	User defined annunciation No 1 received via binary input (C/G)
> Annunc. 2	User defined annunciation No 2 received via binary input (C/G)
> Annunc. 3	User defined annunciation No 3 received via binary input (C/G)
> Annunc. 4	User defined annunciation No 4 received via binary input (C/G)
> Start	General fault detection signal from a main protection relay for beaker failure protection (C/G)
> Start N	Earth fault detection signal from a main protection relay for beaker failure protection (C/G)
> Trip	General trip signal from a main protection relay for beaker failure protection (C/G)
> Trip 3pole	Three-pole trip signal from a main protection relay for beaker failure protection (C/G)
> Trip L1	Trip signal for pole L1 from a main protection relay for beaker failure protection (C/G)
> Trip L2	Trip signal for pole L2 from a main protection relay for beaker failure protection (C/G)
> Trip L3	Trip signal for pole L3 from a main protection relay for beaker failure protection (C/G)
> B/F block	Breaker failure protection blocked via binary input (C/G)
> CB defect	Circuit breaker defective (from external breaker monitor) (C/G)

General operational annunciations of the protection device:

Re-start	Re-start annunciation of the processor system (C)
Syst.Flt	Network fault (C), detailed information in the fault annunciations
LED reset	Stored LED indications reset (C)
Flt.Rec. off	Fault recording switched off (C/G)
Param.Running	Parameters are being set (C/G)
Param. Set A	Parameter set A is active (C/G)
Param. Set B	Parameter set B is active (C/G)
Param. Set C	Parameter set C is active (C/G)
Param. Set D	Parameter set D is active (C/G)

Annunciations of monitoring functions:

Failure 18 V	Failure in internal supply voltage 18 V (C/G)
Failure 15 V	Failure in internal supply voltage 15 V (C/G)
Failure 5 V	Failure in internal supply voltage 5 V (C/G)
Failure 0 V	Failure in offset voltage 0 V (C/G)
Failure RKA	Failure on input/output module RKA (C/G)
Annunc. Lost	Annunciations lost (buffer overflow) (C)
Flt.Buff.Over	Buffer for fault annunciations overflow (C)
Flt.Flag Over	Buffer of fault flags overflow (C)
Oper.Ann.Inv	Operational annunciations invalid (C)
Fault.Ann.Inv	Fault annunciations invalid (C)
Annunc.Inval.	Annunciations invalid (C/G)
Stat.Buff.Inv	Buffer for operation statistics invalid (C/G)
LED Buff.Inva	Buffer for stored LEDs invalid (C/G)
Failure Σ I	Failure detected by current plausibility monitor ΣI (C/G)
Failure Isymm	Failure detected by current symmetry monitor (C/G)
Chs.Error	Check-sum error detected (C/G)
Chs.S1 Error	Check-sum error detected for parameter set A: no operation possible with this set (C/G)
Chs.S2 Error	Check-sum error detected for parameter Set B: no operation possible with this set (C/G)
Chs.S3 Error	Check-sum error detected for parameter set C: no operation possible with this set (C/G)
Chs.S4 Error	Check-sum error detected for parameter set D: no operation possible with this set (C/G)

Operational annunciation of the circuit breaker failure protection:

B F P o f f	Circuit breaker failure protection is switched off (C/G)
B F P - P i c k u p	Circuit breaker failure protection initiated (signal from feeder protection arrived) (C/G)
B F P B l o c k	Circuit breaker failure protection is blocked (C/G)
B F P H W R e l .	Hardware monitor has released breaker failure protection (C/G)

Annunciations of the pole discrepancy supervision:

P o l e D i s . o f f	Pole discrepancy supervision is switched off (C/G)

Further messages:

T a b l e o v e r f l o w	If more messages have been received the last valid message is *Table overflow*.
E n d o f t a b l e	If not all memory places are used the last message is *End of table*.

6.4.3 Fault annunciations – address blocks 52 to 54

The annunciations which occurred during the last three network faults can be read off on the front panel or via the operating interface. The indications are recorded in the sequence from the youngest to the oldest under addresses 5200, 5300 and 5400. When a further fault occurs, the data relating to the oldest are erased. Each fault data buffer can contain up to 80 annunciations.

Input of the codeword is not required.

To call up the **last** fault data, one goes to address 5200 either by direct address **DA 5 2 0 0 E** or by paging with the keys ⇑ or ⇓ . With the keys ↑ or ↓ one can page through the individual annunciations forwards or backwards. Each annunciation is assigned with a sequence item number.

In the following clarification, all the available fault annunciations are indicated. In the case of a specific fault, of course, only the associated annunciations appear in the display. At first, an example is given for a system fault, and explained.

```
5 2 0 0 L A S T
F A U L T
```

Beginning of the block “Fault annunciations of the last system fault”

```
0 0 1 1 8 . 0 3 . 9 4
S y s t e m  F l t  6
```

under item 1, the date of the system fault is indicated, in the second line the consecutive number of the system fault

```
0 0 2 1 6 : 4 8 : 5 5 . 7 4 8
F a u l t              : C
```

under item 2, the time of the beginning of the fault is given; time resolution is 1 ms

```
0 0 3 0  m s
B F P - S t a r t      : C
```

The following items indicate all fault annunciations which have occurred from fault detection until drop-off of the device, in chronological sequence. These annunciations are tagged with the relative time in milliseconds, starting with the fault detection.

```
0 0 4 1 2 1  m s
B F P  C r o s s T r i p : C
```

```
0 0 6 3 2 3  m s
B F P  T r i p  B B    : C
```

```
0 0 5 3 8 9  m s
D e v .  D r o p - o f f : C
```

etc.

General fault annunciations of the device:

Syst. Flt	System fault with consecutive number
Fault	Beginning of fault
IL1/In=	Interrupted fault current of phase L1
IL2/In=	Interrupted fault current of phase L2
IL3/In=	Interrupted fault current of phase L3
Dev. Drop-off	Drop-off of the device, general

Annunciations of circuit breaker failure protection:

BFP Block	Breaker failure protection blocked (during fault)
BFP-Start	Initiation of breaker failure protection
BFP-Start.L1	Initiation of breaker failure protection, CB pole L1
BFP-Start.L2	Initiation of breaker failure protection, CB pole L2
BFP-Start.L3	Initiation of breaker failure protection, CB pole L3
BFP T1 3pole	Delay time T1 after three-pole trip expired
BFP T1 1pole	Delay time T1 after single-pole trip expired
BFP T2 Curr	Delay time T2 with current criterion expired
BFP T2 Baux	Delay time T2 with CB auxiliary contact criterion expired
BFP T3 BRdef	Delay time with defective circuit breaker expired
BFP Tend Faul	Delay time for end fault protection expired
BFP Trip L1	Trip by breaker failure protection caused by failure in pole L1 (1st stage)
BFP Trip L2	Trip by breaker failure protection caused by failure in pole L2 (1st stage)
BFP Trip L3	Trip by breaker failure protection caused by failure in pole L3 (1st stage)
BFP Trip L123	Trip by breaker failure protection three-pole (1st stage)
BFP CrossTrip	Trip by breaker failure protection on the local feeder circuit breaker (1st stage)
BFP Trip BB	Trip by breaker failure protection to the bus-bar breakers (2nd stage)
B/F TransTrip	Transfer trip signal of breaker failure protection

B / F - B R d e f T r i p	Trip by breaker failure protection on the bus-bar breakers during defect of the feeder breaker

Annunciations of pole discrepancy supervision:

P o l e D i s . S t a r t	Pole discrepancy supervision started
P o l e D i s . L 1	Pole discrepancy supervision started for pole L1
P o l e D i s . L 2	Pole discrepancy supervision started for pole L2
P o l e D i s . L 3	Pole discrepancy supervision started for pole L3
P o l e D i s T r i p	Trip by pole discrepancy supervision

Further messages:

T a b l e e m p t y	means that no fault event has been recorded
T a b l e o v e r f l o w	means that other fault data have occurred, however, memory is full
T a b l e s u p e r c e d e d	a new fault event has occurred during read-out: page on with ↑ or ↓; the display shows the first annunciation in the actualized order
E n d o f t a b l e	If not all memory places are used the last message is `End of table`.

The data of the **second to last** system fault can be found under address 5300. The available annunciations are the same as for the last fault.

⇧ 5 3 0 0 ▮ 2 n d T O L A S ⇩ T F A U L T	Beginning of the block “Fault annunciations of the second to last system fault”
etc.	

The data of the **third to last** system fault can be found under address 5400. The available annunciations are the same as for the last fault.

⇧ 5 4 0 0 ▮ 3 r d T O L A S ⇩ T F A U L T	Beginning of the block “Fault annunciations of the third to last system fault”
etc.	

6.4.4 Circuit breaker operation statistics – address block 56

The number of trip commands initiated by 7SV512, i.e. the number of breaker fail occurrences, is counted. Additionally, the interrupted currents are stated for each individual pole and given under the fault annunciations (refer Section 6.4.3) following each trip command. These currents are accumulated and stored. Counter status and stores are secured against auxiliary voltage failure and can be read off under address 5600. The address can be reached by direct addressing **DA 5 6 0 0 E** or by paging with the keys ⇑ or ⇓ until address 5600 is reached. The counters can be called up using the key ↑ for forwards paging or ↓ for backwards paging.

Entry of the codeword is not required for read-off of counter states.

```
5 6 0 0 CB  O P E R A T .
S T A T I S T I C S
```

Beginning of the block “Circuit breaker operation statistics”

```
5 6 0 4 B / F  N o  =
1
```

Number of circuit breaker failures, e.g. 1

Page on with key ↑ to get further counter states

```
5 6 0 7 Σ I L 1 / I n =
```

Accumulated interrupted currents for CB pole L1

```
5 6 0 8 Σ I L 2 / I n =
```

Accumulated interrupted currents for CB pole L2

```
5 6 0 9 Σ I L 3 / I n =
```

Accumulated interrupted currents for CB pole L3

The maximum values of the counters are:

– *B/F No*	9 digits
– *ΣIL1/In*, *ΣIL2/In*, *ΣIL3/In*	7 digits plus 1 decimal digit

The counters can be reset to 0 in block 82 (see Section 6.5.2).

6.4.5 Read-out of operational measured values – address block 57

The steady state rms operating values can be read out at any time under the address 5700. The address can be called up directly using **DA 5 7 0 0 E** or by paging with ⇑ or ⇓. The individual measured values can be found by further paging with ↑ or ↓. Entry of the codeword is not necessary. The values are updated in approximately 5 seconds intervals.

The data are displayed in absolute primary values and in percent of the rated device values. To ensure correct primary values, the rated data must be entered to the device under address block 11 as described in Section 6.3.3.

In the following example, some typical values have been inserted. In practice the actual values appear. Values outside the operation range of the relay are indicated with ★★★★.

```
5 7 0 0 ▮ O P E R A T I O N A L
M E A S U R E D   V A L U E S
```

Beginning of the block “Operational measured values”

Use ↑ key to move to the next address with the next measured value.

```
5 7 0 1 ▮ M E A S . V A L U E
I L 1       = 3 8 5   A
```

```
5 7 0 2 ▮ M E A S . V A L U E
I L 2       = 3 8 2   A
```

```
5 7 0 3 ▮ M E A S . V A L U E
I L 3       = 3 8 6   A
```

```
5 7 0 4 ▮ M E A S . V A L U E
I E         = 1   A
```

Page on with the ↑ key to read off the next address with the next measured value, or page back with ↓.

One address is available for each measured value. The values can be reached also by direct addressing using key **DA** followed by the address number and execute with **E**.

The primary values (addresses 5701 to 5704) are related to the primary rated values as parameterized under address 1105 (for I_N) (refer to Section 6.3.3).

```
5 7 1 0 ▮ M E A S . V A L U E
I L 1 [ % ] = 9 6 . 2   %
```

```
5 7 1 1 ▮ M E A S . V A L U E
I L 2 [ % ] = 9 5 . 5   %
```

```
5 7 1 2 ▮ M E A S . V A L U E
I L 3 [ % ] = 9 6 . 5   %
```

```
5 7 1 3 ▮ M E A S . V A L U E
I E [ % ]   = 0 . 2   %
```

The percentage is related to rated current of the relay

6.5 Operational control facilities

During operation of the protection relay it may be desired to intervene in functions or annunciations manually or from system conditions. The 7SV512 contains facilities, e.g. to re-adjust the real time clock, to erase stored information and event counters, to switch on or off partial functions under specific conditions, or to change over preselected sets of function parameters.

The functions can be controlled from the operating panel on the front of the device, via the operating interface on the front as well as via binary inputs.

In order to control functions via binary inputs it is necessary that the binary inputs are marshalled to the corresponding switching functions during installation of the device and that they are connected accordingly (refer to Section 5.5.2 Marshalling of the binary inputs).

The control facilities begin with address block 8000. This address is reached

– by block paging with the keys ⇑ forwards or ⇓ backwards up to address 8000, or

– by direct selection with address code, using key **DA**, address **8 0 0 0** and execute with key **E.**

8 0 0 0 DEVICE CONTROL	Beginning of the block “Device control”

6.5.1 Adjusting and synchronizing the real time clock – address block 81

The date and time can be adjusted at any time during operation as long as the real time clock is operative. Setting is carried out in block 81 which is reached by direct addressing **DA 8 1 0 0 E** or by paging with ⇑ and ⇓. Input of the codeword is required to change the data.

Selection of the individual addresses is by further scrolling using ↑ ↓ as shown below. Each modification must be confirmed with the enter key **E**.

8 1 0 0 SETTING REAL TIME CLOCK	Beginning of the block “Setting the real time clock”. Continue with ↑.
2 1 . 0 3 . 1 9 9 4 1 1 : 3 1 : 3 1	At first, the actual date and time are displayed. Continue with ↑.
8 1 0 2 DATE	Enter the new date: 2 digits for day, 2 digits for month and 4 digits for year (including century); use the format as configured under address 7003 (Section 5.3.2), but always use a dot as separator: **DD.MM.YYYY** or **MM.DD.YYYY**
8 1 0 3 TIME	Enter the new time: hours, minutes, seconds, each with 2 digits, separated by a dot: **HH.MM.SS**
8 1 0 4 DIFF. TIME	Using the difference time setting, the clock is set forwards by the entered time, or backwards using the +/– key. The format is the same as with the time setting above.

6.5.2 Erasing stored annunciations and counters – address block 82

The statistical indications (Section 6.4.4, address 5600) are stored in EEPROMs in the device. They are therefore not erased if the auxiliary power supply fails. Additionally, annunciations and the status of the LED memories are stored in NV–RAMs and are thus saved provided the back-up battery is installed. These stores can be cleared in block 82. Block 82 is called up by paging with the keys ⇑ or ⇓ or directly by keying in the code **DA 8 2 0 0 E**. With the exception of resetting the LED indications (address 8201), codeword entry is necessary to erase the stored items. Reset is separate for the different groups of counters, memories and annunciations. One reaches the individual items by paging ↑ ↓. Erasure requires confirmation with the key **J**/**Y**. The display then confirms the erasure. If erasure is not required, press key **N** or simply page on.

```
8 2 0 0 ▮
R E S E T
```

Beginning of block “Reset”

```
8 2 0 1 ▮ R E S E T
L E D   ?
```

Request whether the LED memories should be reset

```
8 2 0 2 ▮ R E S E T
C O U N T E R S   ?
```

Request whether the CB operation counters should be set to zero

```
8 2 0 3 ▮ R E S E T
T O T A L   I s c   ?
```

Request whether the total of switched short-circuit currents should be set to zero

```
8 2 0 4 ▮ R E S E T
O P E R A T . A N N U N C .
?
```

Request whether the operational annunciation buffer store should be erased

```
8 2 0 5 ▮ R E S E T
F A U L T   A N N U N C .   ?
```

Request whether the fault annunciation buffer store should be erased

During erasure of the stores the display shows TASK IN PROGRESS. After erasure the relay acknowledges erasure, e.g.

```
8 2 0 2 ▮ R E S E T
E X E C U T E D
```

6.5.3 Off/On control of part functions of the device

During operation of protection relay it may be desired to control the relay manually or from system criteria, temporarily to switch off partial functions of the relay or to switch them on only under specific conditions. An example may be the switching off the protection function during maintenance of the circuit breaker.

The relay allows partial functions to be switched on or off via binary inputs or manual operation via the integrated operator panel or via the operating interface at the front using a personal computer.

For switching via binary inputs it is, of course, necessary that the binary inputs have been marshalled to the corresponding switching functions. Furthermore, it must be noted that a binary input is required for each function, switching off and switching on. The switching command is stored in the relay and protected against auxiliary voltage failure (the function of a bi-stable store). The command can be annunciated via an annunciation relay or LED display.

For switching via the integrated operator panel or the front interface, a code word is necessary. The control functions are found at the beginning of the parameter block of each protection or supplementary function. The switch condition shown in the display can be changed over using the "No"–key **N**. The opposite switch condition then appears in the display. Each change of condition must be confirmed with the **E**–key. The change-over is first recorded in the relay when codeword operation has been terminated. This is done by the key combination **F E**, i.e. depressing the function key **F** followed by the entry key **E**. The display shows the question "SAVE NEW SETTINGS?". Confirm with the "Yes"–key **J/Y** that the new settings shall become valid now. The switched conditions are then permanently stored in EEPROMs and protected against auxiliary voltage failure; the display confirms "NEW SETTINGS SAVED". If you press the "No"–key **N** instead, codeword operation will be aborted, i.e. all alterations which have been changed since the last codeword entry are lost. Thus, erroneous alterations can be made ineffective.

A function is switched *ON* when the on–command has been given by both the binary input AND also from the operator panel or interface.

A function is switched *OFF* when the off–command is given by EITHER the binary input OR from the operator panel or the operating interface. Thus it is ensured that a partial function can only be switched on from that place where it was previously switched off.

Control inputs which are not marshalled to a binary input are regarded, from that location, as switched on, so that change of the condition is possible from the operator panel or the operating interface.

At the operator panel and the operating interface the factory setting is equally that all partial functions are switched on, so that switching via binary inputs is possible.

The completion of a switching command is, independent of its cause, output as an operational annunciation:

– "(function) `off`" **C**omes at the instant of switch-off,

– "(function) `off`" **G**oes at the instant that it is switched on.

These annunciations are listed in block 51 under OPERATIONAL ANNUNCIATIONS and can also be transmitted via the LSA interface to a central computer. Also they can be marshalled as binary outputs; the signal relay then indicates the switched-off condition.

For annunciations one must differentiate:

– Direct confirmation of a binary input is available as long as the corresponding binary input is energized. It can be output via a signal relay or LED. In the summary of all annunciations (Appendix C) these annunciations are identified with a '>' symbol.

– The completion indication of the switched-off condition is signalized independently of the source of the command. It appears ("Comes") at the instant of switch-off and disappears ("Goes") at the instant of switching on.

The following survey shows the control functions and also indicates which confirmation indications are generated.

	Binary input confirmation	Completion indication ('comes' and 'goes')

```
  1 2 0 1 B R E A K   F A I L
O N
O F F
```

Circuit breaker failure protection

031	>B/F on		
032	>B/F off	471	B/F off

```
  3 8 0 1 P O L E   D I S C R
O N
O F F
```

Pole discrepancy supervision

033	>PoleDis. on		
034	>PoleDis. off	600	PoleDis. off

```
  2 8 0 1 F A U L T   R E C R
O N
O F F
```

Fault recording

035	>FaultRec on		
036	>FaultRec off	108	FaultRec. off

6.5.4 Selection of parameter sets – address block 85

Up to 4 different sets of parameters can be selected for the functional parameters, i.e. the addresses above 1000 and below 4000. These parameter sets can be switched over during operation, locally using the operator panel or via the operating interface using a personal computer, or also remotely using binary inputs.

The first parameter set is identified as set A, the other sets are B, C and D. Each of these sets has been set during parameterizing (Section 6.3.1.2) provided the switch-over facility is used.

6.5.4.1 Read-out of settings of a parameter set

In order to **look up** the settings of a parameter set **in the display** it is sufficient to go to any address of the function parameters (i.e. addresses above 1000 and below 4000), either by direct addressing using key **DA**, entering the four-figure address code and terminating with enter key **E**, or by paging through the display with ⇑ or ⇓. You can switch-over to look up a different parameter set, e.g.

– Press key combination **F 2**, i.e. first the function key **F** and then the number key **2**. All displayed parameters now refer to parameter set B.

The parameter set is indicated in the display by a leading character (A to D) before the address number indicating the parameter set identification.

The corresponding procedure is used for the other parameter sets:

- Key combination **F 1**: access to parameter set **A**
- Key combination **F 2**: access to parameter set **B**
- Key combination **F 3**: access to parameter set **C**
- Key combination **F 4**: access to parameter set **D**

The relay always operates with the active parameter set even during read-out of the parameters of any desired parameter set. The change-over procedure described here is, therefore, only valid for **read-out** of parameters **in the display**.

6.5.4.2 Change-over of the active parameter set from the operating panel

For **change over to a different parameter set**, i.e. if a different set shall be activated, the address block 85 has to be used. For this, codeword entry is required.

The block for processing parameter sets is reached by pressing the direct address key **DA** followed by the address **8 5 0 0** and enter key **E** or by paging through the display with ⇑ or ⇓. The heading of the block will appear:

⇑ ⇓	8 5 0 0 ▮ P A R A M E T E R C H A N G E - O V E R

Beginning of the block “Parameter change-over”: processing of parameter sets

It is possible to scroll through the individual addresses using the ↑ key or to scroll backwards with ↓.

Address 8501 shows the actually active parameter set with which the relay operates.

In order to switch-over to a different parameter set scroll on with ↑ to address 8503. Using the “No”–key **N** you can change to any desired parameter set; alternatively, you can decide that the parameter sets are to be switched over from binary inputs. If the desired set or possibility appears in the display, press the enter key **E**.

As with every settings of the device for which codeword input is necessary, codeword operation must be terminated. This is done by using the key combination **F E**, i.e. depressing the function key **F** followed by the entry key **E**. The display shows the question “SAVE NEW SETTINGS?”. Confirm with the “Yes”–key **Y** that the new settings shall become valid now. If you press the “No”–key **N** instead, codeword operation will be aborted, i.e. all alterations which have been changed since the last codeword entry are lost. Thus, erroneous alterations can be made ineffective.

```
8 5 0 1 ▮ A C T I V   P A R A M
S E T   A
```

Address 8501 shows the actually active parameter set

```
8 5 0 3 ▮ A C T I V A T I N G
S E T   A
```

```
S E T   B
```

```
S E T   C
```

```
S E T   D
```

```
S E T   B Y   B I N . I N P U T
```

Use the "No"–key **N** to page through the alternatives. The desired alternative is selected by pressing the enter key **E**.

If you select *SET BY BIN.INPUT*, then the parameter set can be changed over via binary inputs (see Section 6.5.4.3).

6.5.4.3 Change-over of the active parameter set via binary inputs

If change-over of parameter sets is intended to be carried out via binary inputs, the following is to be heeded:

– Locally (i.e. from the operator panel or from PC via the operating interface), ACTIVATION must be switched to *SET BY BIN.INPUT* (refer Section 6.5.4.2).

– 2 logical binary inputs are available for control of the 4 parameter sets. These binary inputs are designated "`>Param.Selec.1`" and "`>Param. Selec.2`".

– The logical binary inputs must be allocated to 2 physical input modules (refer Section 5.5.2) in order to allow control. An input is treated as not energized when it is not assigned to any physical input.

– The control input signals must be continuously present as long as the selected parameter set shall be active.

The active parameter sets are assigned to the logical binary inputs as shown in Table 6.2.

A simplified connection example is shown in Figure 6.4. Of course, the binary inputs must be declared in normally open ("`NO`") mode.

Binary input		causes active set
ParamSelec.1	ParamSelec.2	
no	no	Set A
yes	no	Set B
no	yes	Set C
yes	yes	Set D

no = input not energized
yes = input energized

Table 6.2 Parameter selection via binary input

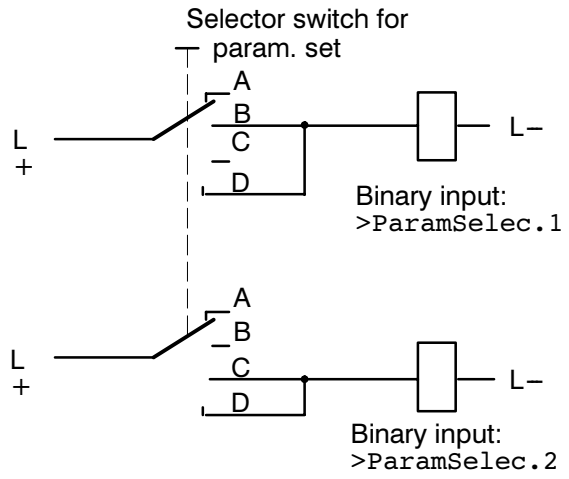

Figure 6.4 Connection scheme for parameter change-over via binary inputs

6.6 Testing and commissioning

6.6.1 General

Prerequisite for commissioning is the completion of the preparation procedures detailed in Chapter 5.

Warning

Hazardous voltages are present in this electrical equipment during operation. Non-observance of the safety rules can result in severe personal injury or property damage.

Only qualified personnel shall work on and around this equipment after becoming thoroughly familiar with all warnings and safety notices of this manual as well as with the applicable safety regulations.

Particular attention must be drawn to the following:

- The earthing screw of the device must be connected solidly to the protective earth conductor before any other connection is made.
- Hazardous voltages can be present on all circuits and components connected to the supply voltage or to the measuring and test quantities.
- Hazardous voltages can be present in the device even after disconnection of the supply voltage (storage capacitors!).
- The limit values given in the Technical data (Section 3.1) must not be exceeded at all, not even during testing and commissioning.

When testing the unit with a secondary injection test set, it must be ensured that no other measured values are connected and that the tripping leads to the circuit breaker trip-coils have been interrupted.

DANGER!

Secondary connections of the current transformers must be short-circuited before the current leads to the relay are interrupted!
If a test switch is installed which automatically short-circuits the current transformer secondary leads, it is sufficient to set this switch to the “Test” position. The short-circuit switch must be checked beforehand (refer Section 5.2.5).

It is recommended that the actual settings for the relay be used for the testing procedure. If these values are not (yet) available, test the relay with the factory settings. In the following description of the test sequence the preset settings are assumed.

For the functional tests a three-phase symmetrical current source with individually adjustable currents should be available. For checking the pick-up values a single-phase current source is sufficient, but this is not adequate for a correct functional check of the measured value monitoring systems.

If unsymmetrical currents occur during the tests it is likely that the asymmetry monitoring will frequently operate. This is of no concern because the condition of steady-state measured values is monitored and, under normal operating conditions, these are symmetrical; under short circuit conditions these monitoring systems are not effective.

NOTE! The accuracy which can be achieved during testing depends on the accuracy of the testing equipment. The accuracy values specified in the Technical data can only be reproduced under the reference conditions set down in IEC 60255 resp. VDE 0435/part 303 and with the use of precision measuring instruments. The tests are therefore to be looked upon purely as functional tests.

During all the tests it is important to ensure that the correct command (trip) contacts close, that the proper indications appear at the LEDs and the output relays for remote signalling. If the relay is connected to a central memory device via the serial interface, correct communication between the relay and the master station must be checked.

After tests which cause LED indications to appear, these should be reset, at least once by each of the possible methods: the reset button on the front plate and via the remote reset relay (see connection diagrams, Appendix A). If the reset functions have been tested, resetting the stored indications is no more necessary as they are erased automatically with each new pick-up of the relay and replaced by the new annunciations.

6.6.2 Testing the circuit breaker failure protection

In order to test the circuit breaker failure protection, this function must be switched on, i.e. address 1201 BREAK FAIL = *ON*. The end fault protection is made ineffective by setting address 1220 to T – ENDFAULT = ∞.

Before a test current is injected, the initiation conditions must be fulfilled: The binary input functions "`>Start`" (FNo 70, allocated to INPUT 10) and "`>Trip`" (FNo 72, allocated to INPUT 9 when delivered) must be energized. Binary input function "`>B/F Block`" (FNo 77, allocated to INPUT 8 when delivered) must not be energized. In addition, input function "`>Trip 3pole`" (FNo 73) is energized.

Testing can be performed with single-phase, two-phase or three-phase test current. When testing single-phase, the test current is injected via one phase and earth.

Caution!

Test currents larger than 4 times I_N may overload and damage the relay if applied continuously (refer to Section 3.1.1 for overload capability). Observe a cooling down period!

For current above 4 · I_N, therefore, measurement shall be performed dynamically. It should be stated that the relay picks up at 1.1 times setting value and does not pick up at 0.9 times setting value. Current below 4 · I_N can be slowly increased.

When the set value for I – BF (address 1202, factory setting 0.1 x I_N) is exceeded the indication "`BFP Start`" (FNo 473, on LED 1 when delivered) appears. The further reaction of the breaker failure protection depends on the parameterized functions.

With two-stage breaker failure protection (address 1203 is set TRIP CRoff = *NO*), the annunciation "`BFP CrossTrip`" (FNo 506, LED 2 when delivered) appears after expiry of the time delay T1 – 3POLE (address 1206, 0.00 s when delivered). Check that the assigned trip relay contacts close (trip relays 3 to 5 when delivered).

After expiry of the time T2 – CURRENT (address 1212, factory setting 0.15 s) the annunciation "`BFP Trip BB`" appears (FNo 507, LED 3 when delivered). Check that the assigned trip relay contacts close (trip relays 1 when delivered). Additionally, the intertrip signal "`BFP TransTrip`" appears (FNo 508, LED 4 when delivered). Check that the assigned trip relay contacts close (trip relays 2 when delivered).

When the delay time T – 1 – 3POLE (address 1206) is not set to 0.00 s (as delivered), then it must be noted, that the total delay time until bus-bar trip signal "`BFP Trip BB`" may be composed of the sum of T1 – 3POLE and T2 – CURRENT (if address 1211 is set T – TRIP – BB = *T1* + *T2*; as delivered), or it is only the time T2 – CURRENT (if address 1211 is set T – TRIP – BB = *T2*).

With single-stage breaker failure protection (address 1203 is set TRIP CRoff = *YES*), address 1211 T – TRIP – BB should be set to *T2*, otherwise address 1206 must be set T1 – 3POLE must be set to 0.00 s in order to ensure that this time will not be added to the expected tripping time. After expiry of T2 – CURRENT (address 1212, 0.15 s at delivery) the annunciation "`BFP Trip BB`" appears (FNo 507, LED 3 when delivered). Check that the assigned trip relay contacts close (trip relays 1 when delivered). Additionally, the intertrip signal "`BFP TransTrip`" appears (FNo 508, LED 4 when delivered). Check that the assigned trip relay contacts close (trip relays 2 when delivered). Switch off the test current.

It must generally be noted that the set times are pure delay times; operating times of the measurement functions are not included.

The tests carried out until now have used the current flow as breaker failure criterion. The following tests with the breaker auxiliary contact criterion are carried out without test current. The binary inputs as above remain energized.

In addition, one of the binary input functions for the breaker auxiliary contacts is energized (FNo 16 to FNo 20), which is allocated to a binary input (e.g. INPUT 6 for the conditions as delivered), preferably one that is actually used. Tests can be performed with single-stage and/or two-stage breaker failure protection, as it is done with the current tests. But note that the time delay for the second stage is now T2 – CB – AUX (address 1213).

When the reset time of the protection is measured it must be considered that the values given in the Technical data are valid only when the test current is interrupted at the moment of its zero crossing.

Finally, de-energize all binary inputs.

6.6.3 Testing the end fault protection

The end fault protection is made effective. To achieve this, the time T–ENDFAULT (address 1220) must be set back to a definite value (not ∞), e.g. to the default value 0.10 s.

One of the binary input functions for the breaker auxiliary contacts is energized (FNo 16 to FNo 20), which is allocated to a binary input (e.g. INPUT 6 for the conditions as delivered), preferably one that is actually used.

In addition, the binary input function "`>Start`" (FNo 70, INPUT 10) is energized.

Testing can be performed with single-phase, two-phase or three-phase test current above the pick-up value of the breaker failure protection (address 1202, 0.1 · I_N when delivered). When testing single-phase, the test current is injected via one phase and earth.

Caution!

Test currents larger than 4 times I_N may overload and damage the relay if applied continuously (refer to Section 3.1.1 for overload capability). Observe a cooling down period!

After expiry of the time T–ENDFAULT (address 1220, factory setting 0.10 s) the annunciation "`BFP TendFault`" appears (FNo 514, not marshalled when delivered). Check that the trip relay assigned to the function "`BFP TransTrip`" (FNo 508, trip relay 2 when delivered) closes its contacts.

It must be noted that the set times are pure delay times; operating times of the measurement functions are not included.

Switch off test current, de-energize all binary inputs.

6.6.4 Testing the circuit breaker pole discrepancy supervision

For these tests the pole discrepancy supervision must be configured as POLE DISCR = *EXIST* (address 7838) during configuration (refer to Section 4.5.2) and switched on (address 3801 POLE–DISC = *ON*).

One of the binary input functions for the breaker auxiliary contacts is energized (FNo 16, FNo 17, FNo 18, or FNo20), which is allocated to a binary input (e.g. INPUT 6 for the conditions as delivered), preferably one that is actually used. The binary inputs assigned to FNo 19 "`>CB Aux. 3p C`" and FNo 70 "`>Start`" must <u>not</u> be energized!

Testing can be performed with single-phase, two-phase or three-phase test current above the pick-up value of the breaker failure protection (address 1202, 0.1 · I_N when delivered). When testing single-phase, the test current is injected via one phase and earth.

Caution!

Test currents larger than 4 times I_N may overload and damage the relay if applied continuously (refer to Section 3.1.1 for overload capability). Observe a cooling down period!

After expiry of the time T–DISCREP (address 3802, factory setting 2 s) three-pole trip command is given by the pole discrepancy supervision. Check that the trip relays assigned to the local trip "`Pole-Dis.Trip`" (FNo 610, trip relays 3 to 5 when delivered) close their contacts.

It must be noted that the set times are pure delay times; operating times of the measurement functions are not included.

Switch off test current, de-energize all binary inputs.

6.7 Commissioning using primary tests

All secondary testing sets and equipment must be removed. Reconnect current and voltage transformers. For testing with primary values the line must be energized.

Warning

Primary tests shall be performed only l qualified personnel which is trained commissioning of protection systems ar familiar with the operation of the protecte object as well as the rules and regulatio (switching, earthing, etc.)

Because of the variety of application possibilities and possible switch-gear configuration, a detailed description of the applicable tests is not possible. The most important thing is that the local circumstances and the switch-gear and protection diagrams are observed.

It is recommended that the local circuit breaker of the feeder under test is isolated at both sides, i.e. the bus-bar disconnector(s) and the line disconnector must be opened. Thus, switching of the circuit breaker is possible without danger.

Caution!

The protection relay will issue bus-bar trip command even during tests on the local feeder breaker. The trip signal to the adjacent circuit breakers of the bus-bar should be made ineffective, e.g. by switching off of the corresponding control voltages.

The trip command of the feeder protection to the local feeder circuit breaker is also interrupted until final completion of the tests in order to ensure that only the breaker failure protection can trip this breaker.

The following lists do not claim to cover all possibilities. On the other hand, they may contain items that can be bypassed in the actual application.

6.7.1 Checking the initiation conditions

All possible initiation conditions must be checked. The following hints presuppose that at least the binary inputs INPUT 8, INPUT 9, and INPUT 10 are allocated to the input functions as delivered, so that they are included in the trip release monitoring of the device.

The annunciation "`BFP-Pickup`" (FNo 472) must appear each time the beaker failure protection is initiated. When the relay is delivered, this annunciation is not allocated to any output relay or LED, but it appears "Coming" and "Going" in the operational annunciations (address 5100, refer to Section 6.4.2).

At first, ensure that the feeder circuit breaker is open.

a) Initiation by single-pole trip command L1 of the feeder protection:
Binary input functions "`>Trip L1`", "`>Trip`", "`>Start`", and "`>Start N`" (if used) are triggered.

b) Initiation by single-pole trip command L2 of the feeder protection:
Binary input functions "`>Trip L2`", "`>Trip`", "`>Start`", and "`>Start N`" (if used) are triggered.

c) Initiation by single-pole trip command L3 of the feeder protection:
Binary input functions "`>Trip L3`", "`>Trip`", "`>Start`", and "`>Start N`" (if used) are triggered.

d) Initiation by three-pole trip command of the feeder protection:
Binary input functions "`>Trip L1`", "`>Trip L2`", "`>Trip L3`", "`>Trip`", and "`>Start`", are triggered.

e) Initiation by three-pole trip command of a three-pole feeder protection (e.g. overvoltage protection):
Binary input functions "`>Trip 3 pole`", "`>Trip`", and "`>Start`", are triggered.

De-energize all binary inputs.

6.7.2 Checking the local trip with breaker failure criterion from the auxiliary contacts

The circuit breaker – isolated by its adjacent disconnectors, as mentioned above – is now switched on. Note that the pole discrepancy protection of the circuit breaker may initiate a later three-pole trip during these tests. The internal pole discrepancy supervision may operate, too. The circuit breaker is switched on before each test.

a) Initiation by single-pole trip command L1 of the feeder protection:
Single-pole trip command is issued by the breaker failure protection after T1 – 1POLE (address 1205), provided local trip (cross trip) is allowed (according address 1203) and single-pole trip is parameterized (address 1204).

b) Initiation by single-pole trip command L2 of the feeder protection:
Single-pole trip command is issued by the breaker failure protection after T1 – POLE (address 1205), provided local trip (cross trip) is allowed (according address 1203) and single-pole trip is parameterized (address 1204).

c) Initiation by single-pole trip command L3 of the feeder protection:
Single-pole trip command is issued by the breaker failure protection after T1 – 1POLE (address 1205), provided local trip (cross trip) is allowed (according address 1203) and single-pole trip is parameterized (address 1204).

d) Initiation by three-pole trip command of the feeder protection:
Three-pole trip command is issued by the breaker failure protection after T1 – 3POLE (address 1206), provided local trip (cross trip) is allowed (according address 1203).

De-energize all binary inputs.

6.7.3 Checking the local trip and the current circuits

The current transformer connections are checked with real primary current. Before the protected object is energized, it must be ensured, that a back-up protection is effective in case a real fault should occur during the tests.

A load current of at least 10 % of the rated current is necessary. If the measuring circuit connections are correct, none of the measured value monitoring systems in the relay will operate. If a fault indication appears, the possible causes can be found in the operational annunciations (Address 5100).

For current sum errors, the matching factors (Section 6.3.3) should be checked.

If the symmetry monitoring appears, it is possible that asymmetry is in fact present on the line. If this is a normal operational condition, the corresponding monitoring function should be set at a less sensitive value (Section 6.3.6).

Currents can be read off on the display in the front or via the operating interface in block 57 and compared with the actual measured values. If substantial deviations occur or if the unit indicates a considerable earth current, then the current transformer connections are incorrect. Short-circuit the current transformers and make corrections.

The circuit breaker is closed again for the following trip tests. Note that the integrated pole discrepancy supervision may operate and initiate three-pole tripping. As the correct allocation of the individual circuit breaker poles is already verified during the tests according to Section 6.7.2, one single test is sufficient, here.

a) Initiation by three-pole trip command of the feeder protection:
Three-pole trip command is issued by the breaker failure protection after T1 – 3POLE (address 1206) provided local trip (cross trip) is allowed (according address 1203).

Finally, de-energize all binary inputs. Open circuit breaker

6.7.4 Checking the intertrip to the opposite feeder end

All devices which are necessary for transmission of the intertrip signal to the opposite feeder end must be commissioned in accordance with the associated commissioning instructions. The transmission link must be checked.

The trip commands to the bus-bar circuit breakers remain ineffective during the test. The disconnectors at both sides of the feeder circuit breaker must be open. The circuit breaker is closed.

At the remote end of the feeder, the circuit breaker must be isolated from the feeder and the bus-bar, too. The circuit breaker is closed there.

Anyone of the tests as described in Section 6.7.2 is repeated. The initiation conditions remain effective after the local feeder breaker has tripped.

After expiry of the time T2 – CB – AUX (address 1213) the intertrip signal is transmitted and the circuit breaker of the opposite feeder end is tripped. It is possible that trip of the remote end breaker is made dependent of further conditions: this must be considered. When assessing the time delay it must be taken into account that this delay depends on the parameter T – TRIP – BB (address 1211): it may be started either with initiation or after the local trip command of the breaker failure protection.

If the intertrip check is to be carried out with current flow as breaker failure criterion (e.g. because the auxiliary contact criterion is not used), then either the feeder must be energized at both ends in order to produce a current above the pick-up value I – BF (address 1202), or a corresponding secondary current must be injected into the relay under test. In the first case, it must be ensured that a back-up protection for the feeder is effective in case a real fault would occur during the test.

6.7.5 Checking the bus-bar trip

The distribution of the trip commands to the adjacent circuit breakers of the bus-bar depends widely on the bus-bar arrangement.

Checking the bus-bar trip should be carried out after completion of the tests on all individual feeder circuit breakers.

In most cases a trip bus is installed for the trip commands of the bus-bar breakers. This trip bus is energized by the trip relay 1 of each breaker failure protection relay (command function “`BFP Trip BB`”, FNo 507), if applicable, dependent of the position of the bus-bar disconnector(s) of the feeder under test.

The important thing is that the bus-bar trip command arrives at all circuit breakers associated with that bus-bar section, to which the feeder of the originating protection relay is connected, including any bus tie, and that the bus-bar trip command does not arrive at any of the other circuit breakers. The bus-bar trip checks must be performed such, that finally all switching combinations have been covered.

After completion of the tests, it must be carefully checked that the required operational status of the trip bus(ses) is re-arranged (e.g. in case that certain circuits have been interrupted for certain tests) and that all control voltages are switched on (in case certain control voltages have been switched off for certain tests). This is also valid for all the tripping commands of feeder protection relays which have been interrupted in order to simulate a breaker failure condition.

6.8 Putting the relay into operation

All setting values should be checked again, in case they were altered during the tests. Particularly check that all desired protection and ancillary functions have been programmed in the configuration parameters (address block 78, refer to Section 5.4) and all desired protection functions have been switched *ON*.

The counters for circuit breaker operation statistics should be erased (address block 82, refer to Section 6.5.2).

Push the key **M**/**S** on the front. The display shows the beginning of the annunciation blocks. Thus, it is possible that the measured values for the quiescent state of the relay can be displayed (see below). These values has been chosen during configuration (refer to Section 5.3.2) under the addresses 7005 and 7006.

Stored indications on the front plate should be reset by pressing the push-button “RESET LED” on the front so that from then on only real faults are indicated. From that moment the measured values of the quiescent state are displayed. During pushing the RESET button, the LEDs on the front will light up (except the “Blocked” – LED); thus, a LED test is performed at the same time.

Check that the module is properly inserted. The green LED must be on on the front; the red LED must not be on.

Close housing cover.

All terminal screws – even those not in use – must be tightened.

If a test switch is available, then this must be in the operating position.

The protection relay is now ready for operation.

7 Maintenance and fault tracing

Siemens digital protection relays are designed to require no special maintenance. All measurement and signal processing circuits are fully solid state and therefore completely maintenance free. Input modules are even static, relays are hermetically sealed or provided with protective covers.

If the device is equipped with a back-up battery for saving of stored annunciations and the internal time clock, the clock module should be replaced after at least 10 years of operation. (refer to Section 7.2). This recommendation is valid independent on whether the battery has been discharged by occasional supply voltage failures or not.

As the protection is almost completely self-monitored, from the measuring inputs to the command output relays, hardware and software faults are automatically annunciated. This ensures the high availability of the relay and allows a more corrective rather than preventive maintenance strategy. Tests at short intervals become, therefore, superfluous.

With detected hardware faults the relay blocks itself; drop-off of the availability relay signals “equipment fault”. If there is a fault detected in the external measuring circuits, generally an alarm is given only.

Recognized software faults cause the processor to reset and restart. If such a fault is not eliminated by restarting, further restarts are initiated. If the fault is still present after three restart attempts the protective system will switch itself out of service and indicate this condition by the red LED “Blocked” on the front plate. Drop-off of the availability relay signals “equipment fault”.

The reaction to defects and indications given by the relay can be individually and in chronological sequence read off as operational annunciations under the address 5100, for defect diagnosis (refer to Section 6.4.2).

If the relay is connected to a local substation automation system (LSA), defect indications will also be transferred via the serial interface to the central control system.

Warning

Ensure that the connection modules are not damaged when removing or inserting the device modules! Hazardous voltages may occur when the heavy current plugs are damaged!

7.1 Routine checks

Routine checks of characteristics or pick-up values are not necessary as they form part of the continuously supervised firmware programs. The planned maintenance intervals for checking and maintenance of the plant can be used to perform operational testing of the protection equipment. This maintenance serves mainly for checking the interfaces of the unit, i.e. the coupling with the plant. The following procedure is recommended:

– Read-out of operational values (address block 57) and comparison with the actual values for checking the analog interfaces.

– Simulation of an internal short-circuit with 4 x I_N for checking the analog input at high currents.

Warning

Hazardous voltages can be present on all circuits and components connected with the supply voltage or with the measuring and test quantities!

Caution!

Test currents larger than 4 times I_N may overload and damage the relay if applied continuously (refer to Section 3.1.1 for overload capability). Observe a cooling down period!

7.2 Replacing the clock module

If the device is equipped with the clock option (model 7SV512★–★★★★**1**–★★, refer Section 2.3 Ordering data), the device annunciations are stored in NV–RAMs. The clock module contains also the back-up battery so that the annunciations are retained even with a longer failure of the d.c. supply voltage.

The clock module should be replaced at the latest after 10 years of operation.

Recommended clock module:

– DALLAS
  DS 1386 – 32 K
  RAMified TIMEKEEPER

The module is located on the CPU cart. The complete draw-out module must be removed from the housing in order to replace the clock module.

The procedure when replacing the clock module is described below.

– Prepare area of work: provide conductive surface for the basic module.

– Open housing cover.

– Read out device annunciations, i.e. all addresses which commence with 5 (5000 onwards). This is carried out most convenient using the front operating interface and a personal computer with the DIGSI® protection data processing program; the information is thus stored in the PC.

  Note: All configuration data and settings of the device are stored in EEPROMs protected against switching off of the power supply. They are stored independent of the back-up battery. They are, therefore, neither lost when the battery is replaced nor when the device is operated without a battery.

– Prepare the battery as in Figure 7.1:

Warning

Hazardous voltages can be present in the device even after disconnection of the supply voltage or after removal of the modules from the housing (storage capacitors)!

– Loosen the draw-out module using the pulling aids provided at the top and bottom. (Figure 7.3).

Caution!

Electrostatic discharges via the component connections, the PCB tracks or the connecting pins of the modules must be avoided under all circumstances by previously touching an earthed metal surface.

– Pull out the module and place onto the conductive surface.

– Get access to the CPU board.

– Pull out used clock module from the socket according to Figure 7.1; **do not place on the conductive surface!**

– Insert the prepared new clock module into the socket; observe correct mounting position.

– Remount PCB board to the draw-out module.

– Insert draw-out module into the housing; ensure that the releasing lever is pushed fully to the right before the module is pressed in.

– Firmly push in the module using the releasing lever. (Figure 7.3).

Warning

The discharged battery contains Lithium. It must only be disposed off in line with the applicable regulations!

Do not reverse polarities! Do not recharge! Do not throw into fire! Danger of explosion!

– Provided the internal system clock is not automatically synchronized via the LSA interface, it can now be set or synchronized as described in Section 6.5.1

– Close housing cover.

The replacement of the clock module has thus been completed.

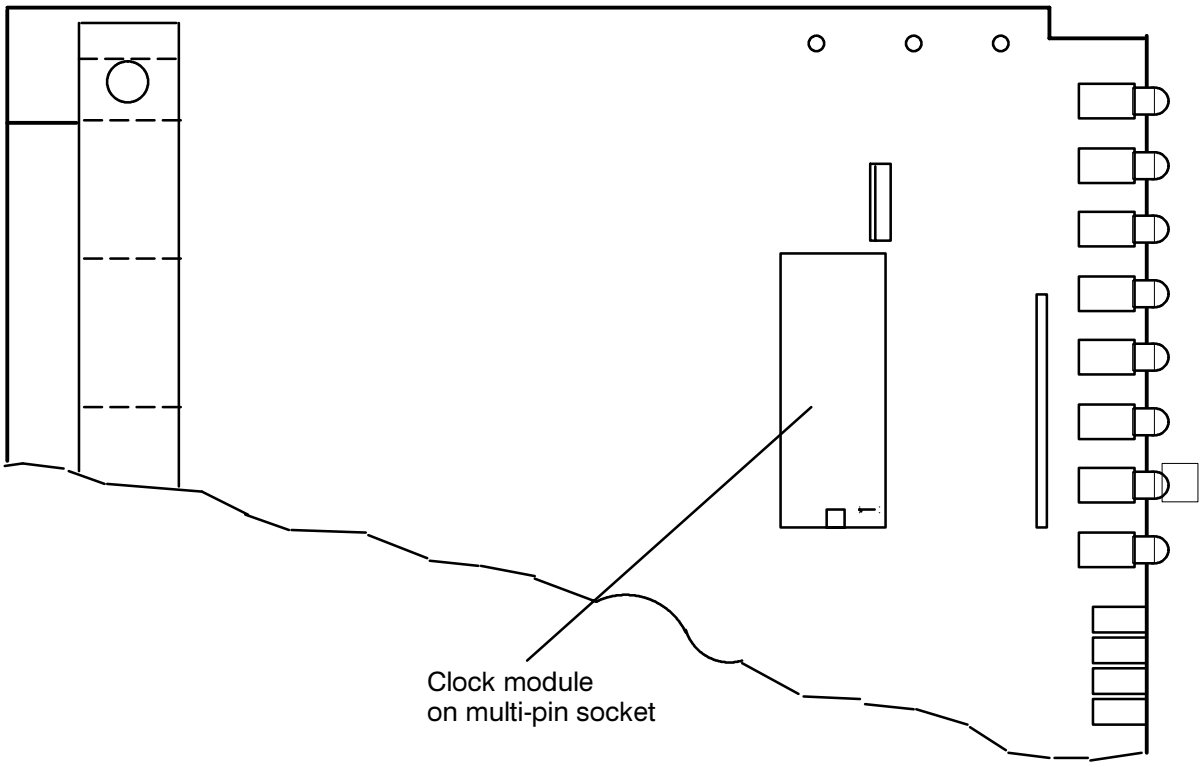

Figure 7.1 Position of the clock module

7.3 Fault tracing

If the protective device indicates a defect, the following procedure is suggested:

If none of the LEDs on the front plate of the module is on, then check:

– Has the module been properly pushed in and locked?

– Is the ON/OFF switch on the front plate in the ON position ⊙ ?

– Is the auxiliary voltage available with the correct polarity and of adequate magnitude, connected to the correct terminals (General diagrams in Appendix A)?

– Has the mini-fuse in the power supply section blown (see Figure 7.2)? If appropriate, replace the fuse according to Section 7.3.1.

If the red fault indicator “Blocked” on the front is on and the green ready LED remains dark, the device has recognized an internal fault. Re-initialization of the protection system could be tried by switching the processor system off and on again (by means of the switch on the front plate). This, however, results in loss of fault data and messages if the relay is not equipped with a buffer battery, and, if a parameterizing process has not yet been completed, the last parameters are not stored.

7.3.1 Replacing the mini-fuse

– Select a replacement fuse 5 × 20 mm. Ensure that the rated value, time lag (medium slow) and code letters are correct. (Figure 7.2).

– Prepare area of work: provide conductive surface for the basic module.

– Open housing cover.

Warning

Hazardous voltages can be present in the device even after disconnection of the supply voltage or after removal of the modules from the housing (storage capacitors)!

– Loosen the module using the pulling aids provided at the top and bottom. (Figure 7.3).

Caution!

Electrostatic discharges via the component connections, the PCB tracks or the connecting pins of the modules must be avoided under all circumstances by previously touching an earthed metal surface.

– Pull out the module and place onto the conductive surface.

– Remove blown fuse from the holder (Figure 7.2).

– Fit new fuse into the holder (Figure 7.2).

– Insert basic module into the housing; ensure that the releasing lever is pushed fully to the right before the module is pressed in (Figure 7.3).

– Firmly push in the module using the releasing lever. (Figure 7.3).

– Close housing cover.

Switch on the device again. If a power supply failure is still signalled, a fault or short-circuit is present in the internal power supply. The device should be returned to the factory (see Chapter 8).

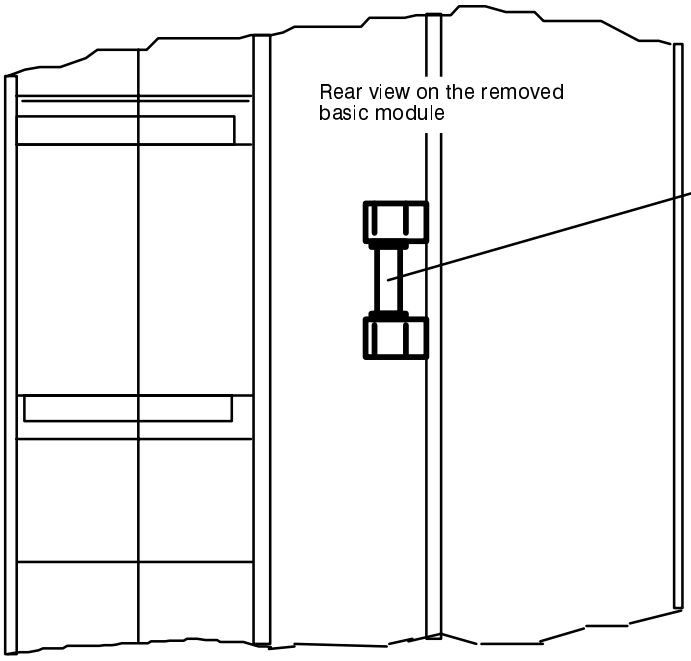

Mini-fuse of the power supply; medium slow (M)

at U_{HN}/V–	rated value
24/48	2 A/E
60/110/125	1,6 A/E
220/250	1 A/G

Figure 7.2 Mini-fuse of the power supply

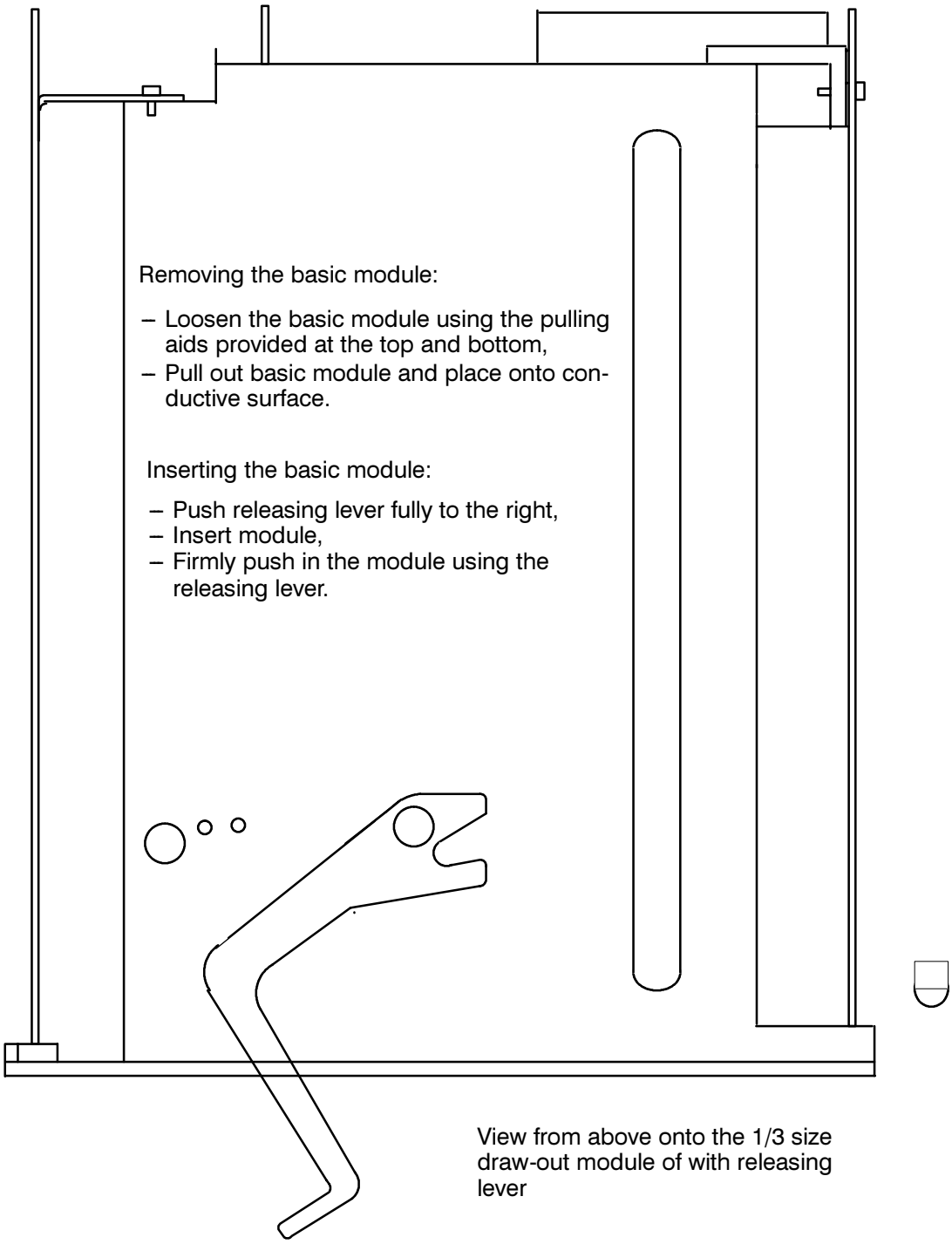

Figure 7.3 Aid for removing and inserting basic module

8 Repairs

Repair of defective modules is not recommended at all because specially selected electronic components are used which must be handled in accordance with the procedures required for **E**lectrostatically **E**ndangered **C**omponents (EEC). Furthermore, special manufacturing techniques are necessary for any work on the printed circuit boards in order to do not damage the bath-soldered multilayer boards, the sensitive components and the protective finish.

Therefore, if a defect cannot be corrected by operator procedures such as described in Chapter 7, it is recommended that the complete relay should be returned to the manufacturer. Use the original packaging for return. If alternative packing is used, this must provide the degree of protection against mechanical shock, as laid down in IEC 60255 – 21 – 1 class 2 and IEC 60255 – 21 – 2 class 1.

If it is unavoidable to replace individual modules, it is imperative that the standards related to the handling of **E**lectrostatically **E**ndangered **C**omponents are observed.

Warning

Hazardous voltages can be present in the device even after disconnection of the supply voltage or after removal of the module from the housing (storage capacitors)!

Caution!

Electrostatic discharges via the component connections, the PCB tracks or the connecting pins of the modules must be avoided under all circumstances by previously touching an earthed metal surface. This applies equally for the replacement of removable components, such as EPROM or EEPROM chips. For transport and returning of individual modules electrostatic protective packing material must be used.

Components and modules are not endangered as long as they are installed within the relay.

Should it become necessary to exchange any device or module, the complete parameter assignment should be repeated. Respective notes are contained in Chapter 5 and 6.

9 Storage

Solid state protective relays shall be stored in dry and clean rooms. The limit temperature range for storage of the relays or associated spare parts is −25 °C to +55 °C (refer Section 3.1.4 under the Technical data), corresponding to – 12 °F to 130 °F.

The relative humidity must be within limits such that neither condensation nor ice forms.

It is recommended to reduce the storage temperature to the range +10 °C to +35 °C (50 °F to 95 °F); this prevents from early ageing of the electrolytic capacitors which are contained in the power supply.

For very long storage periods, it is recommended that the relay should be connected to the auxiliary voltage source for one or two days every other year, in order to regenerate the electrolytic capacitors. The same is valid before the relay is finally installed. In extreme climatic conditions (tropics) pre-warming would thus be achieved and condensation avoided.

Before initial energization with supply voltage, the relay shall be situated in the operating area for at least two hours in order to ensure temperature equalization and to avoid humidity influences and condensation.

Appendix

A General diagrams

B Connection diagrams

C Tables

A General diagrams

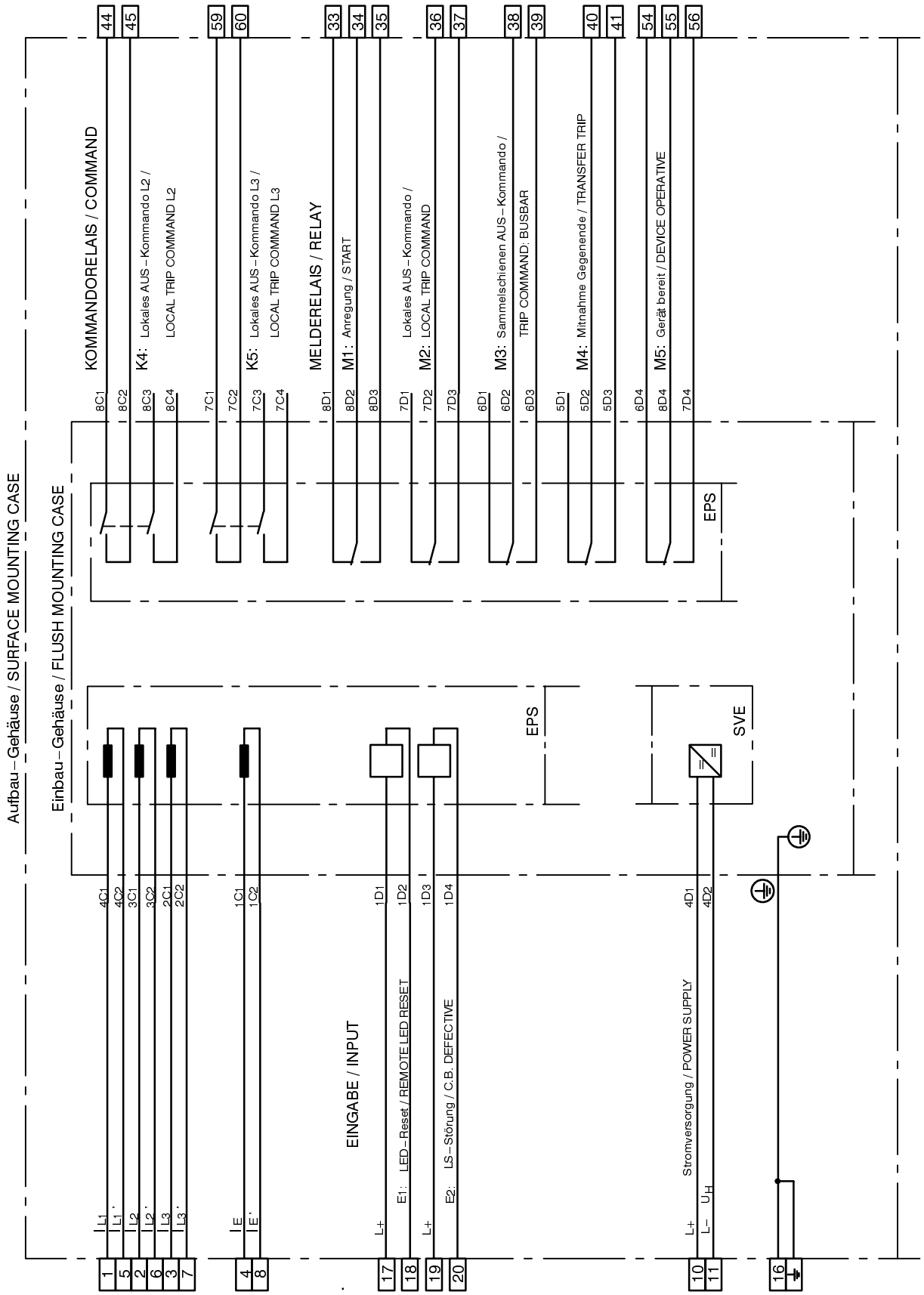

Figure A.1 General diagram 7SV512 (sheet 1 of 3)

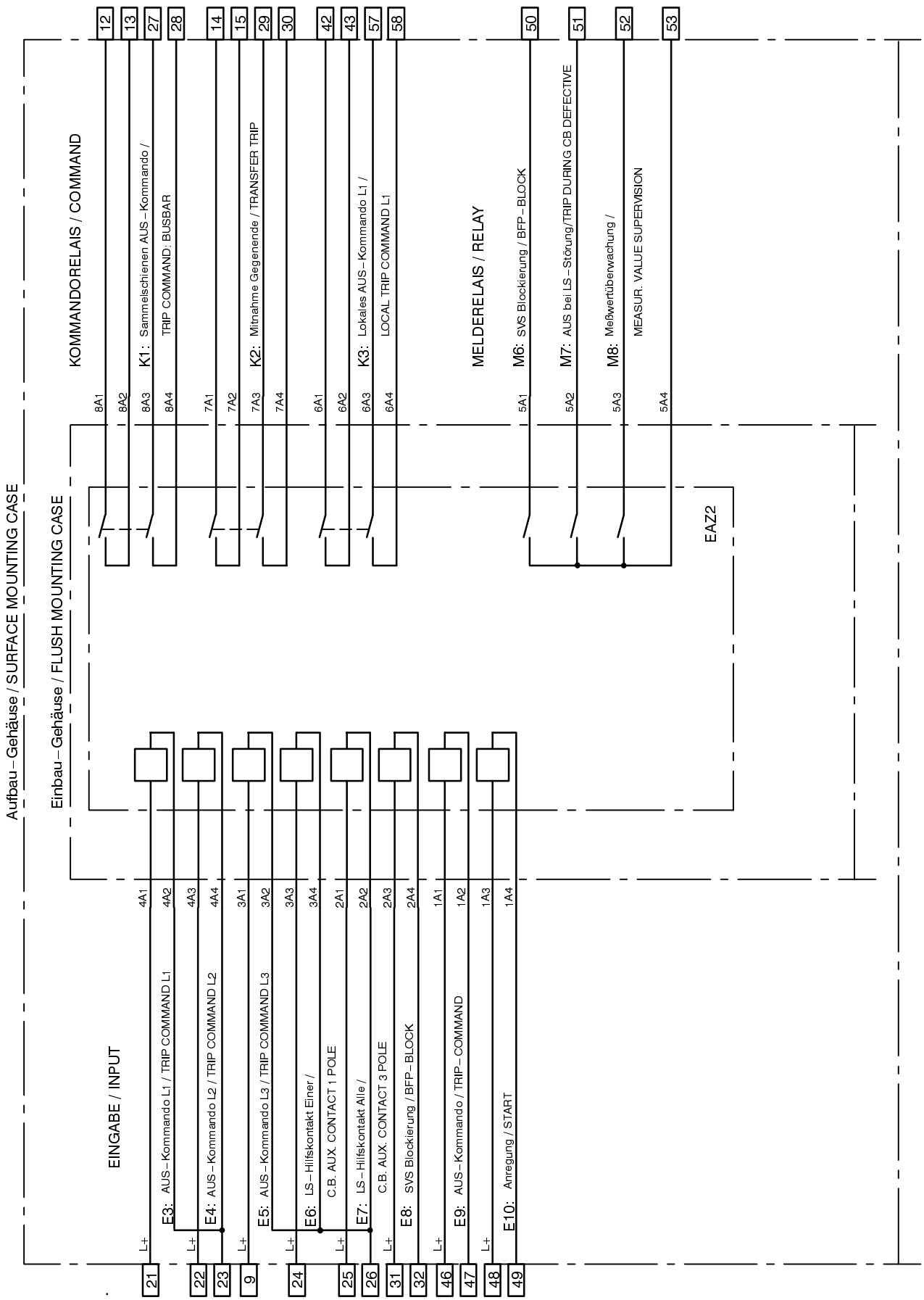

Figure A.2 General diagram 7SV512 (sheet 2 of 3)

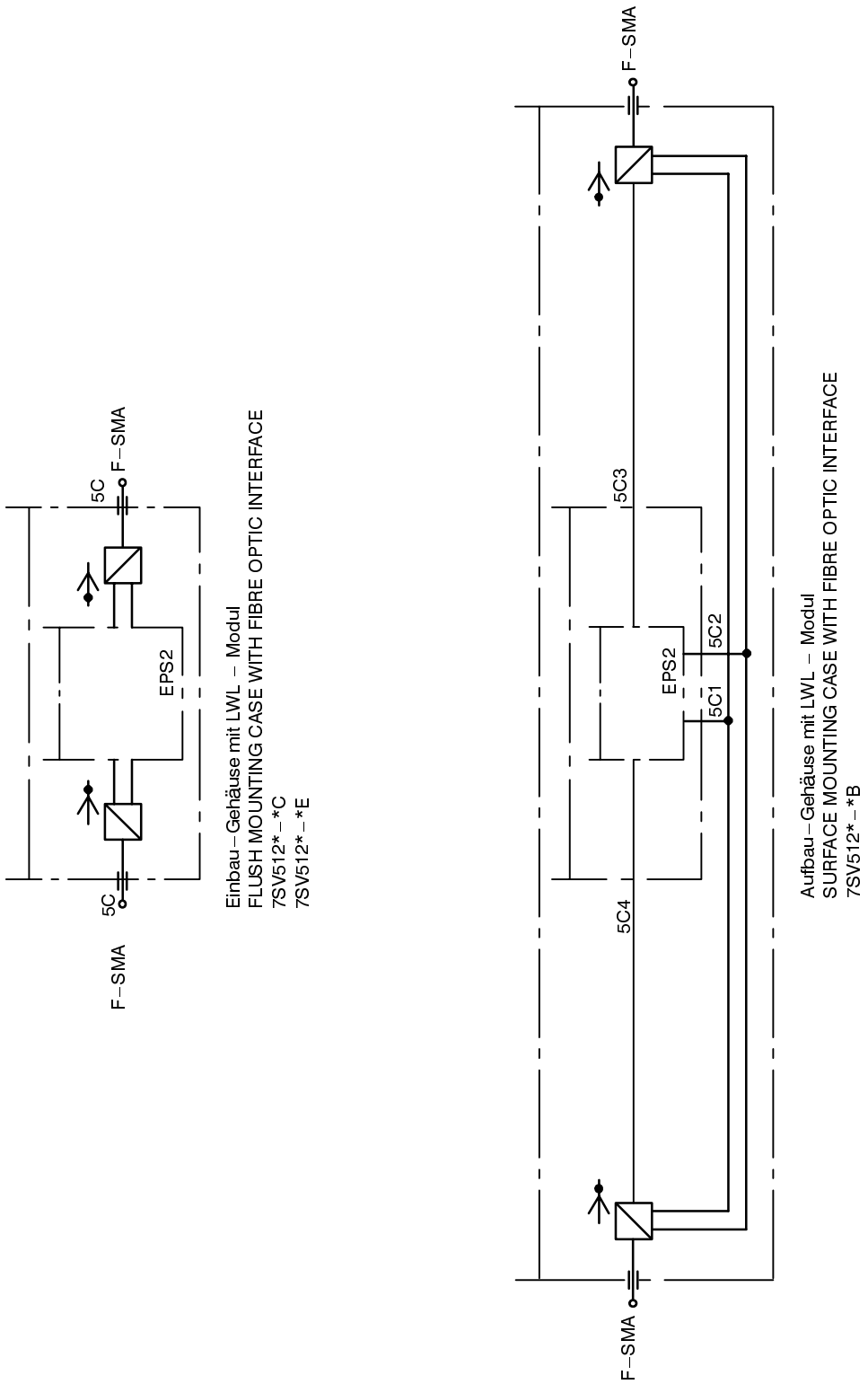

Figure A.3 General diagram 7SV512 (sheet 3 of 3)

B Connection diagrams

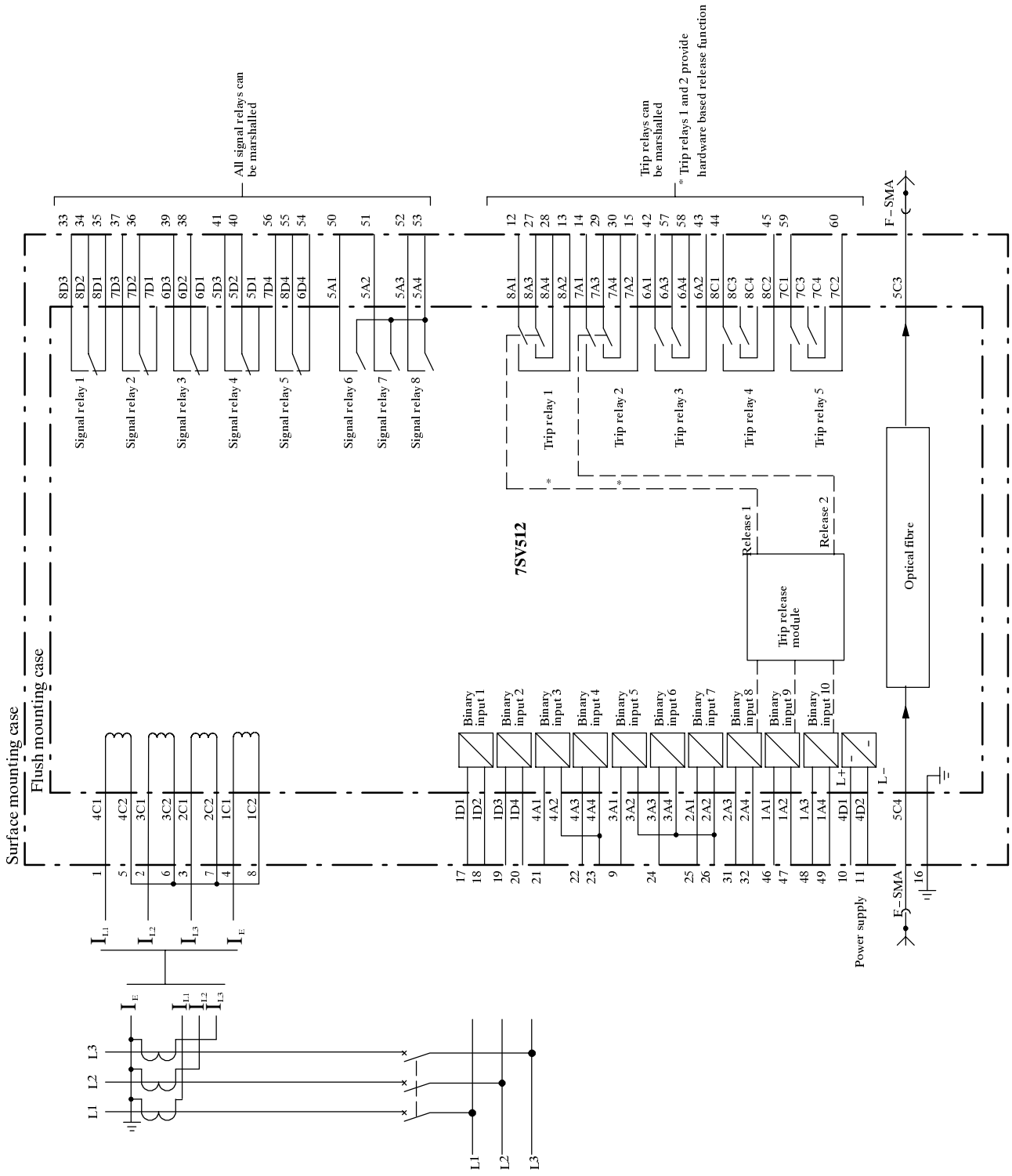

Figure B.1 Connection diagram (example) of 7SV512

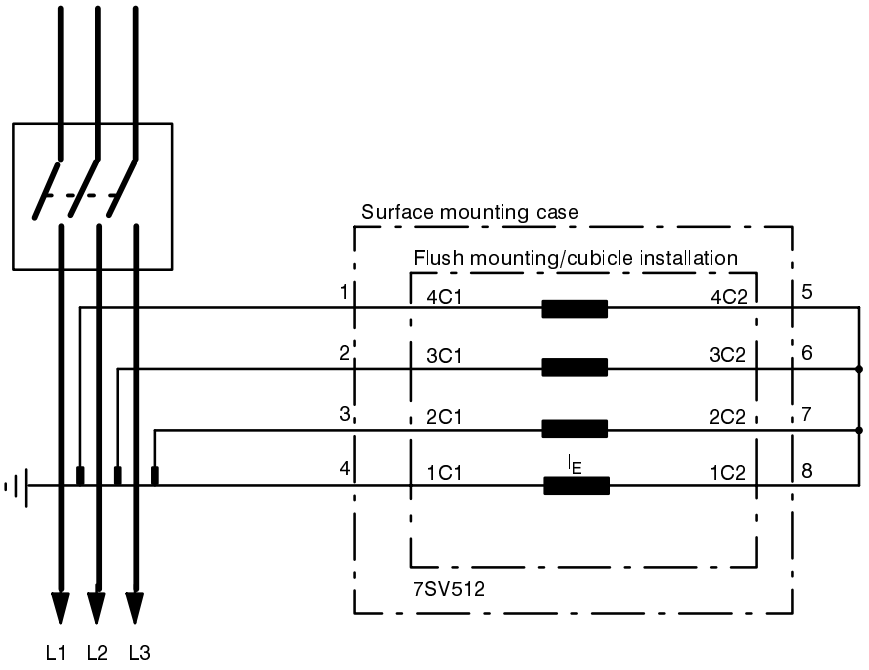

Figure B.2 Connections to three current transformers with star-point (residual current) – standard circuit, suitable for all systems

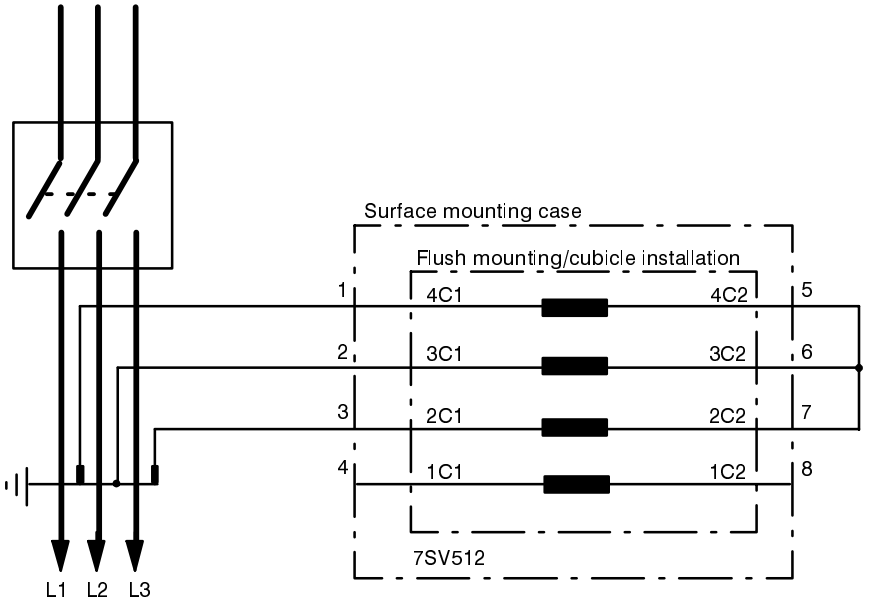

Figure B.3 Connections to two current transformers, only for isolated or compensated systems

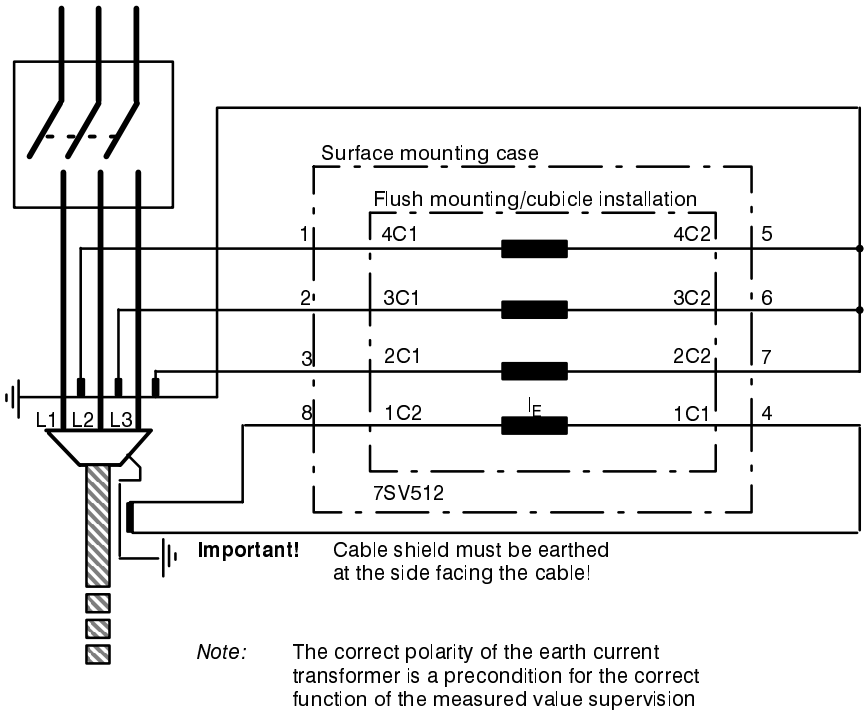

Figure B.4 Connections to three current transformers – residual current fed from particular summation c.t., preferably for effectively earthed or low-ohmic earthed systems

C Tables

Table C.1 Table of all binary inputs 117

Table C.2 Table of all binary outputs 118

Table C.3 Reference table for configuration parameters 121

Table C.4 Reference table for functional parameters 123

Table C.5 Operational control facilities 125

NOTE: The following tables list all data which are available in the maximum complement of the device. Dependent on the ordered model, only those data may be present which are valid for the individual version.

NOTE: The actual tables are attached to the purchased relay.

Table of All Binary Inputs 7SV512

R - Function can be marshalled to binary input (BI)

FNo	Abbreviation	Meaning	BI
1	not allocated	no input function allocated	R
5	>Time Synchro	synchronize internal real time clock	R
6	>LED reset	reset stored LED indicators	R
7	>Start FltRec	start fault recording	R
16	>CB Aux. L1	circuit breaker aux. contact: phase L1	R
17	>CB Aux. L2	circuit breaker aux. contact: phase L2	R
18	>CB Aux. L3	circuit breaker aux. contact: phase L3	R
19	>CB Aux. 3p C	CB aux. contact: all poles closed	R
20	>CB Aux. 1p C	CB aux. contact: any pole closed	R
21	>Annunc. 1	user defined annunciation 1	R
22	>Annunc. 2	user defined annunciation 2	R
23	>Annunc. 3	user defined annunciation 3	R
24	>Annunc. 4	user defined annunciation 4	R
31	>B/F on	switch on breaker failure protection	R
32	>B/F off	switch offbreaker failure protection	R
33	>Pol.Dis. on	switch on pole discrepancy supervision	R
34	>Pol.Dis. off	switch off pole discrepancy supervis'n	R
35	>Flt.Rec. on	switch on fault recording function	R
36	>Flt.Rec. off	switch off fault recording function	R
59	>ParamSelec.1	parameter set selection 1 (with 60)	R
60	>ParamSelec.2	parameter set selection 2 (with 59)	R
70	>Start	fault detection from feeder protection	R
71	>Start N	earth fault detection from feeder prot	R
72	>Trip	general trip command from feeder prot.	R
73	>Trip 3pole	trip 3 pole from feeder protection	R
74	>Trip L1	trip phase L1 from feeder protection	R
75	>Trip L2	trip phase L2 from feeder protection	R
76	>Trip L3	trip phase L3 from feeder protection	R
77	>B/P block	block breaker failure protection	R
78	>CB defect	circuit breaker defective (can't trip)	R

Table of All Binary Outputs 7SV512

Rel,LED - to output relay or LED
OP, PC - to operator panel or PC
LSA - to localized substation autom.

R - Annunc. marshallable
K - Annunciated "Coming"
K/G - "Coming" and "Going"

FNo	Abbreviation	Meaning	Rel LED	OP PC	LSA
1	not allocated	no annunciation function allocated	R		
5	>Time Synchro	synchronize internal real time clock	R		
6	>LED reset	reset stored LED indicators	R		
7	>Start FltRec	start fault recording	R	K	
16	>CB Aux. L1	circuit breaker aux. contact: Phase L1	R	K/G	
17	>CB Aux. L2	circuit breaker aux. contact: Phase L2	R	K/G	
18	>CB Aux. L3	circuit breaker aux. contact: Phase L3	R	K/G	
19	>CB Aux. 3p C	CB aux. contact: all poles closed	R	K/G	
20	>CB Aux. 1p C	CB aux. contact: any pole closed	R	K/G	
21	>Annunc. 1	user defined annunciation 1	R	K/G	K/G
22	>Annunc. 2	user defined annunciation 2	R	K/G	K/G
23	>Annunc. 3	user defined annunciation 3	R	K/G	K/G
24	>Annunc. 4	user defined annunciation 4	R	K/G	K/G
31	>B/F on	switch on breaker failure protection	R		
32	>B/F off	switch off breaker failure protection	R		
33	>Pol.Dis. on	switch on pole discrepancy supervision	R		
34	>Pol.Dis. off	switch off pole discrepancy supervis'n	R		
35	>Flt.Rec. on	switch on fault recording function	R		
36	>Flt.Rec. off	switch off fault recording function	R		
59	>ParamSelec.1	parameter set selection 1 (with 60)	R		
60	>ParamSelec.2	parameter set selection 2 (with 59)	R		
70	>Start	fault detection from feeder protection	R	K/G	K/G
71	>Start N	earth fault detection from feeder prot	R	K/G	K/G
72	>Trip	general trip command from feeder prot.	R	K/G	K/G
73	>Trip 3pole	3-pole trip from feeder protection	R	K/G	K/G
74	>Trip L1	trip phase L1 from feeder protection	R	K/G	K/G
75	>Trip L2	trip phase L2 from feeder protection	R	K/G	K/G
76	>Trip L3	trip phase L3 from feeder protection	R	K/G	K/G
77	>B/F block	block breaker failure protection	R	K/G	K/G
78	>CB defect	circuit breaker defective (can't trip)	R	K/G	K/G

FNo	Abbreviation	Meaning	Rel LED	OP PC	LSA
101	Dev.Operative	Device operative	R		K/G
102	Re-start	Re-start of processor system		K	K
103	Syst.Flt	Fault in the Power System		K	K
104	Fault	Fault event		K	
106	LED reset	LED's Reset		K	
107	Flt.Rec.activ	Fault recording data being transmitted	R		
108	Fault.Rec.off	Fault recording function switched off	R	K/G	
109	Rel.TimeResp.	Real time response to LSA			K
110	Param.Running	Parameters are being set	R	K/G	
116	Param. Set A	Parameter set A is active	R	K/G	K/G
117	Param. Set B	Parameter set B is active	R	K/G	K/G
118	Param. Set C	Parameter set C is active	R	K/G	K/G
119	Param. Set D	Parameter set D is active	R	K/G	K/G
121	Failure 18V	Failure of internal 18Vdc power supply	R	K/G	K/G
122	Failure 15V	Failure of internal 15VDC power supply	R	K/G	K/G
123	Failure 5V	Failure of internal 5VDC power supply	R	K/G	K/G
124	Failure 0V	Failure of internal 0VDC power supply	R	K/G	K/G
125	Failure RKA	Command relay supervision alarm	R	K/G	K/G
131	Annunc. Lost	Annunciations lost due to buffer overf		K	K
132	Fault Bff.Ovr	Fault annunciation buffer overflow			
134	Annu.LSA Lost	Annunciations for LSA lost			K
135	FaultFlagOver	Fault flag buffer overflow		K	
136	Oper.Ann.Inv	Operational annunciations invalid		K	
137	Fault Ann.Inv	Fault annunciations invalid		K	
138	Annunc.Inval.	Alarm not valid		K/G	
139	Stat.Buff.Inv	Statistic annunciation buffer invalid		K/G	
140	LED Buff.Inva	LED annunciation buffer invalid		K/G	
151	Failure ∑I	Failure : current summation supervisio	R	K/G	K/G
154	Failure Isymm	Failure : current symmetry supervision	R	K/G	K/G
161	Chs Error	Error in check sum		K/G	
162	Chs.1 Error	Error in check sum for parameter set A		K/G	
163	Chs.2 Error	Error in check sum for parameter set B		K/G	
164	Chs.3 Error	Error in check sum for parameter set C		K/G	
165	Chs.4 Error	Error in check sum for parameter set D		K/G	
469	Device FltDet	General fault detection of device	R		K
470	Device Trip	General trip of device	R		
471	BFP off	Breaker fail protection is OFF	R	K/G	K/G
472	BFP-Pickup	Breaker fail protection initiated	R	K/G	K/G
473	BFP-Start	Breaker fail protection started	R	K	K/G

FNo	Abbreviation	Meaning	Rel LED	OP PC	LSA
474	BFP-Start. L1	Breaker fail protection START:Phase L1	R	K	K/G
475	BFP-Start. L2	Breaker fail protection START:Phase L2	R	K	K/G
476	BFP-Start. L3	Breaker fail protection START:Phase L3	R	K	K/G
500	Time del.init	Time delay initiated	R		K
501	BFP-BFdefTrip	Circuit breaker defective : TRIP	R	K	K
502	BFP Trip L1	Local 1 pole trip : Phase L1	R	K	K
503	BFP Trip L2	Local 1 pole trip : Phase L2	R	K	K
504	BFP Trip L3	Local 1 pole trip : Phase L3	R	K	K
505	BFP Trip L123	Local 3 pole trip	R	K	K
506	BFP CrossTrip	Local Cross Trip	R	K	K
507	BFP Trip BB	BUSBAR TRIP	R	K	K
508	BFP TransTrip	Transfer trip / remote trip	R	K	
509	BFP Block	Breaker fail protection is blocked	R	K/G	K
510	BFP T1 3pol	Time delay for 3 pole faults expired	R	K	K
511	BFP T1 1pol	Time delay for 1 pole faults expired	R	K	K
512	BFP T2 Curr	Time delay for fault with current exp.	R	K	K
513	BFP T2 Baux	Time delay for faults with CB aux.exp.	R	K	K
514	BFP Tend Faul	Time delay for End-Fault prot.expired	R	K	K
515	BFP T3 BRdef	Time delay for flt with defect. CB exp	R	K	
516	BFP HW Rel	Trip release by hardware supervision	R	K/G	K
600	Pol-Dis. OFF	Pole discrepancy is switched OFF	R	K/G	K/G
601	Pol-Dis.Start	Pole discrepancy Start	R	K	K/G
602	Pol-Dis. L1	Pole discrepancy Start : Phase L1	R	K	K
603	Pol-Dis. L2	Pole discrepancy Start : Phase L2	R	K	K
604	Pol-Dis. L3	Pole discrepancy Start : Phase L3	R	K	K
610	Pol-Dis. Trip	Pole discrepancy TRIP	R	K	K
900	Dev. Drop-off	Device drop-off		K	

Reference Table for Configuration Parameters 7SV512

6000 MARSHALLING

6100 MARSHALLING BINARY INPUTS

6101 INPUT 1 _____

6102 INPUT 2 _____

6103 INPUT 3 _____

6104 INPUT 4 _____

6105 INPUT 5 _____

6106 INPUT 6 _____

6107 INPUT 7 _____

6108 INPUT 8 _____

6109 INPUT 9 _____

6110 INPUT 10 _____

6200 MARSHALLING SIGNAL RELAYS

6201 RELAY 1 _____

6202 RELAY 2 _____

6203 RELAY 3 _____

6204 RELAY 4 _____

6205 RELAY 5 _____

6206 RELAY 6 _____

6207 RELAY 7 _____

6208 RELAY 8 _____

6300 MARSHALLING LED INDICATORS

6301 LED 1 _____

6302 LED 2

6300 MARSHALLING LED INDICATORS

6301 LED 1 _____

6302 LED 2 _____

6303 LED 3 _____

6304 LED 4 _____

6305 LED 5 _____

6306 LED 6 _____

6400 MARSHALLING TRIP RELAYS

6401 TRIP REL. 1 _____

6402 TRIP REL. 2 _____

6403 TRIP REL. 3 _____

6404 TRIP REL. 4 _____

6405 TRIP REL. 5 _____

6900 LSA CONFIGURATION

6902 LSA BAUDR. _____

7000 OPERATING PARAMETERS

7001 LANGUAGE _____

7002 OPER.BAUDR _____

7003 DATE FORM. _____

7004 FAULT IND. _____

7009 DEVICE ADD. _____

7010 FEEDER ADD. _____

7000 OPERATING PARAMETERS		7800 SCOPE OF FUNCTIONS	
7001 LANGUAGE	_____	7828 FAULT RECRD	_____
7002 OPER.BAUDR.	_____	7838 POLE DISCR	_____
7003 DATE FORMAT	_____	7869 LSA	_____
7004 FAULT INDIC	_____	7885 PARAm.C/O	_____
7005 OPER. 1st L	_____	7899 FREQUENCY	_____
7006 OPER. 2nd L	_____		
7007 FAULT 1st L	_____		
7008 FAULT 2nd L	_____		
7009 DEVICE ADD.	_____		
7010 FEEDER ADD.	_____		

Reference Table for Functional Parameters 7SV512

1000 PARAMETERS

1100 POWERSYSTEM DATA

1105 In PRIMARY
min. 10 A
max. 50000 _____

1112 Ie/Iph
min. 0.10
max. 20.00 _____

1115 T-TRIP
min. 0.00 s
max. 32.00 _____

1200 BREAKER FAILURE PROT.

1201 BREAK FAIL
ON [ ]
OFF [ ]

1202 I-BF
min. 0.05 I/In
max. 4.00 _____

1203 TRIP CRoff
NO [ ]
YES [ ]

1204 TRIP 1POLE
YES [ ]
NO [ ]

1205 T1-1POLE
min. 0.00 s
max. 32.00/∞ _____

1206 T1-3POLE
min. 0.00 s
max. 32.00/∞ _____

1211 T-TRIP-BB
T1 + T2 [ ]
T2 [ ]

1212 T2-CURRENT
min. 0.00 s
max. 32.00/∞ _____

1213 T2-CB-AUX.
min. 0.00 s
max. 32.00/∞ _____

1214 T3-CB-DEF.
min. 0.00 s
max. 32.00/∞ _____

1220 T-ENDFAULT
min. 0.00 s
max. 32.00/∞ _____

1221 BLOCK MON
YES [ ]
NO [ ]

```
1222 T-BLOCKMON
     min. 0.05            s
     max. 32.00/∞  ———————

1223 PLAUS 1POL
     RESIDUAL CURRENT [ ]
     NEG.SEQ. CURRENT [ ]

2800 FAULT RECORDINGS

2801 FAULT REC.
     ON               [ ]
     OFF              [ ]

2802 INITIATION
     BY FAULT DETEC.  [ ]
     BY TRIP <T-REC   [ ]

2803 FAULT REC.
     TO PC/PD         [ ]
     TO LSA           [ ]

2804 T-REC
     min. 0.01            s
     max. 2.50     ———————

2900 MEAS.VALUE SUPERVISION

2903 SYM.Ithres
     min. 0.10            I/In
     max. 1.00     ———————

2904 SYM.Fact.I
     min. 0.10
     max. 0.95     ———————

2905 SUM.Ithres
     min. 0.05            I/In
     max. 2.00     ———————

2906 SUM.Fact.I
     min. 0.00
     max. 0.95     ———————

3800 POLE DISCREPANCY

3801 POLE-DISCR
     ON               [ ]
     OFF              [ ]

3802 T-DISCREP
     min. 0.00            s
     max. 32.00/∞  ———————
```

Operational Control Facilities 7SV512

```
8000 DEVICE CONTROL

8100 SETTING REAL TIME CLOCK

8101 DATE/TIME

8102 DATE

8103 TIME

8104 DIFF. TIME

8200 RESET

8201 RESET       LED ?

8202 RESET       COUNTERS ?

8203 RESET       TOTAL Isc ?

8204 RESET       OPERAT.ANNUNC. ?

8205 RESET       FAULT ANNUNC. ?

8500 PARAMETER CHANGE OVER

8501 ACTIV PARAM

8503 ACTIVATION  SET A
                 SET B
                 SET C
                 SET D

8510 COPY ?      ORIG.SET->SET A

8511 COPY ?      ORIG.SET->SET B

8512 COPY ?      ORIG.SET->SET C

8513 COPY ?      ORIG.SET->SET D

8514 COPY     ?  SET A ->  SET B

8515 COPY     ?  SET A ->  SET C

8516 COPY     ?  SET A ->  SET D

8517 COPY     ?  SET B ->  SET A

8518 COPY     ?  SET B ->  SET C

8519 COPY     ?  SET B ->  SET D

8520 COPY     ?  SET C ->  SET A

8521 COPY     ?  SET C ->  SET B

8522 COPY     ?  SET C ->  SET D

8523 COPY     ?  SET D ->  SET A

8524 COPY     ?  SET D ->  SET B

8525 COPY     ?  SET D ->  SET C
```

ON/OFF CONTROL

```
1201 BREAK-FAIL   ON
                  OFF

2801 FAULT REC.   ON
                  OFF

3801 POLE-DISCR   ON
                  OFF
```

To

SIEMENS AKTIENGESELLSCHAFT

Dept. EV S SUP 21

D – 13623 BERLIN

Germany

Dear reader,

printing errors can never be entirely eliminated: therefore, should you come across any when reading this manual, kindly enter them in this form together with any comments or suggestions for improvement that you may have.

From

Name

Company/Dept.

Address

Telephone no.

Corrections/Suggestions

Essential alterations against previous issue:

Error corrected in Appendix B Figure B.1 (wrong polarity in residual path)

Copying of this document and giving it to others and the use or communication of the contents thereof, are forbidden without express authority. Offenders are liable to the payment of damages. All rights are reserved in the event of the grant of a patent or the registration of a utility model or design.

Subject to technical alteration

Siemens Aktiengesellschaft

Order No. C53000–G1176–C91–4
Available from: LZF Fürth – Bislohe
Printed in the Federal Republic of Germany
AG 0600 0.2 FO 128 En