BankGuard PLUS™
Control

Installation Instructions

S&C Electric Company
6601 North Ridge Blvd.
Chicago, Illinois 60626 USA

1011-510 5-17-04

Instruction Sheets Include:

Product Description	1011-500 explains important product features.
Installation	1011-510 describes how to install and connect the BankGuard PLUS Control.
Setup	1011-530 describes how to use the Setup software to configure the BankGuard PLUS Control, check the present settings, and view real-time data.
Operations	1011-540 describes how to view historical data, how to generate reports, and how to update the Control software. This instruction sheet also explains how the BankGuard PLUS Control works during normal operation.
Troubleshooting	1011-550 describes how to diagnose and correct various BankGuard PLUS Control problems.

Latest Release of This Document

The latest release of this instruction sheet is available online at www.sandc.com.

Select: Support/ Product Support Documents. Documents are posted in PDF format.

Safety Information

⚠ WARNING ⚠

The equipment covered by this publication must be installed, operated, and maintained by qualified persons who are knowledgeable in the installation, operation, and maintenance of overhead electric power distribution equipment along with the associated hazards. A qualified person is one who is trained and competent in:

- The skills and techniques necessary to distinguish exposed live parts from non-live parts of electrical equipment.
- The skills and techniques necessary to determine the proper approach distances corresponding to the voltages to which the qualified person will be exposed.
- The proper use of the special precautionary techniques, personal protective equipment, insulating and shielding materials, and insulated tools for working on or near exposed energized parts of electrical equipment.

These instructions are intended only for such qualified persons. They are *not* intended to be a substitute for adequate training and experience in safety procedures for this type of equipment.

Read this Instruction Sheet

Thoroughly and carefully read this instruction sheet before programming, operating, or maintaining your S&C BankGuard PLUS Control. Familiarize yourself with "SAFETY INFORMATION" on pages 3 through 5.

Retain this Instruction Sheet

This instruction sheet is a permanent part of your BankGuard PLUS Control. Designate a location where you can easily retrieve and refer to this publication.

Warranty

The standard warranty contained in S&C's standard conditions of sale, as set forth in Price Sheet 150, is applicable to the BankGuard PLUS Control.

Understanding Safety-Alert Messages

There are several types of safety-alert messages which may appear throughout this instruction sheet as well as on labels attached to the BankGuard PLUS Control. Familiarize yourself with these types of messages and the importance of the various signal words, as explained below.

⚠ DANGER ⚠

"DANGER" identifies the most serious and immediate hazards which *will likely* result in serious personal injury or death if instructions, including recommended precautions, are not followed.

⚠ WARNING ⚠

"WARNING" identifies hazards or unsafe practices which *can* result in serious personal injury or death if instructions, including recommended precautions, are not followed.

⚠ CAUTION ⚠

"CAUTION" identifies hazards or unsafe practices which can result in minor personal injury or product or property damage if instructions, including recommended precautions, are not followed.

⚠ NOTICE ⚠

"NOTICE" identifies important procedures or requirements that, if not followed, can result in product or property damage if instructions are not followed.

Following Safety Instructions

If you do not understand any portion of this instruction sheet and need assistance, contact your nearest S&C Sales Office or call S&C Headquarters at (773) 338-1000, Monday through Friday between 8:30 AM and 5:00 PM Central Standard Time. (In Canada, call S&C Electric Canada Ltd. at (416) 249-9171.)

⚠ NOTICE ⚠

Thoroughly and carefully read this instruction sheet before programming and operating your S&C BankGuard PLUS Control.

Replacement Instructions and Labels

If you need additional copies of this instruction sheet, contact your nearest S&C Sales Office, S&C Headquarters, or S&C Electric Canada Ltd.

It is important that any missing, damaged, or faded labels on the equipment be replaced immediately. Replacement labels are available by contacting your nearest S&C Sales Office, S&C Headquarters, or S&C Electric Canada Ltd.

Instruction Sheet Contents

Introduction 5
Applicable Software 5
Pre-Installation Checklist 6
Optional In-Shop Installation and Setup Steps 7
Installing the Control - Ungrounded Wye Banks 8
Installing the Control - Grounded Wye Banks 15
Installing the Control - Ungrounded Wye Shunt Reactors 19
Communication Access Port 23
BankGuard PLUS Interconnect Diagrams 25
BankGuard PLUS Block Diagram 27

Introduction

This instruction sheet explains:

- Steps you should complete in the shop prior to field installation of the control device (page 6)
- Field installation and testing steps that are specific to the BankGuard PLUS Control for ungrounded wye capacitor banks (page 8)
- Field installation and testing steps that are specific to the BankGuard PLUS Control for grounded wye capacitor banks (page 15)
- Field installation and testing steps that are specific to the BankGuard PLUS Control for ungrounded wye shunt reactors (page 19)

◆NOTE: This instruction sheet does not describe the installation or setup of any equipment used for remote communications; that information is included in the appropriate *Communications Supplement* (available from S&C Electric Company).

Applicable Software

This instruction sheet was prepared for use with software **UPPD105S** or later releases.

You can find the release date on the Setup disk label. For questions regarding the applicability of information in this instruction sheet to future product releases, please contact S&C Electric Company.

Pre-Installation Checklist

Before you install the BankGuard PLUS Control, carry out the following steps. This is best done in the shop before you leave for the installation site.

1. ***Inspect the control device for visible damage.***

   Make sure there is no obvious damage to the enclosure or any of the internal components.

2. ***Locate all required interconnect wiring.***

   The control requires wiring to connect to the 15-Volt-ampere Potential Device used to monitor the voltage between the neutral (common) of the capacitor bank and ground. To use the unbalance compensation feature, the control device requires wiring to connect to the potential devices. Be sure you have the correct wiring for this installation.

3. ***Locate the items that you need in order to install and set up the BankGuard PLUS software.***

   To install the software and set up the control, you will need the following items. You can also use these items to diagnose certain types of hardware problems that can occur during installation.

   ◆NOTE: Although it is possible use the faceplate buttons and LCD for the initial setup of the control, using the IntelliLINK software makes the process faster. You can use the faceplate buttons later to make adjustments easily.

   - *Portable IBM®/PC-compatible Computer* – The computer must be transportable to the installation site and must include:
     - Microsoft Windows 95/98/2000 or Windows NT®
     - Microsoft Internet Explorer, version 5.0 or higher
     - 32 MB of RAM
     - A serial communications port
     - A 3.5” high-density disk drive. (If you do not have a 3.5” drive, contact S&C for other options.)
   - *RS232 Serial Communications Cable* – This cable must have a DB9-pin plug connector at one end (to plug into the local communications port on the control device) and a connector at the other end which fits the serial port on your computer. The cable should be long enough to reach comfortably from the control device to your computer after the control device is installed at the site. It must be a “straight-through” cable, not a null-modem cable.

- *Setup Disks* – Two S&C Setup disks are provided with the BankGuard PLUS Control. This software is used to set up the control, or to troubleshoot certain problems that can occur during installation and setup.

  ◆IMPORTANT: S&C ships several types of software-controlled products. **Make sure you have the correct software disks for the BankGuard PLUS Control.**

4. *If applicable, make sure you have all required communications equipment (radios, modems, etc.) for this control.*

For details, see *Appendix A* in this manual or the appropriate *Communications Supplement*.

5. *Do one of the following:*

- Go directly to the installation site, install the control equipment, then configure the equipment as described elsewhere in this manual.

  For ungrounded wye banks, see page 8.

  For grounded wye banks, see page 15.

  For ungrounded shunt reactors, see page 19.

- Complete any or all of the configuration steps summarized below while you are still in the shop, then go to the installation site and install the control device.

Optional In-Shop Installation and Setup Steps

The following steps can be completed while you are still in the shop *or* later at the installation site. The steps are summarized here and described in detail elsewhere in this manual.

1. *Install the IntelliLINK software on your computer.*

For details, see *To Install the IntelliLINK Software* in the *Setup* Instruction Sheet 1011-530.

2. *If this control device will be part of a SCADA system, configure the communications equipment.*

For details, see *Appendix A* or contact S&C Electric Company.

3. *To the extent possible, set up the software in this control.*

You can complete most of the software setup while you are still in the shop. For an explanation of how to set up the software, see the *Setup* Instruction Sheet 1011-530.

Installing the Control - Ungrounded Wye Banks

Installation consists of several operations. The details of these operations, and the order in which they must be carried out, depend on the type of control device, and on local or customer codes, standards, and procedures. The following information is specific to BankGuard PLUS Controls protecting *ungrounded wye-connected capacitor banks*.

The required fuse blocks and fuses are furnished with the control device, and you *must* install them. When you design the installation, be sure to provide adequate ventilation; the temperature near the control device should not exceed 160°F. This is particularly important when the control is installed in a cabinet or when several controls are installed close together.

Install Control and Connect Wiring

1. ***Read, and make sure you understand, the following warnings before you begin to install or operate this equipment.***

⚠ WARNING ⚠

These instructions do NOT replace the need for utility operation standards. Any conflict between the information in this document and utility practices should be reviewed by appropriate utility personnel and a decision made as to the correct procedures to follow.

Serious risk of personal injury or death may result from contact with electric distribution equipment when electrical isolation and grounding procedures are not followed. The equipment described in this document must be operated and maintained by qualified persons who are thoroughly trained and understand any hazards that may be involved. This document is written only for such qualified persons and is not a substitute for adequate training and experience in safety procedures for accessing high voltage equipment.

This control is connected to capacitors operating at primary voltage levels. High voltage may be present in the wiring to the control or the control itself during certain failures of the capacitor bank wiring or system grounding, or due to a failure of the capacitor bank itself. For this reason, access to the control should be treated with the same safety precautions that would be applied when accessing other high voltage lines and equipment. Follow all locally approved safety procedures when working on or around this control.

Do not energize the control power source entering the control enclosure until all wiring is complete.

⚠ WARNING ⚠

Do not enable communications by connecting radios, fiber optic cables, or dedicated phone lines until this is called out in the instructions.

Before attempting to access an existing installation, check carefully for visible or audible signs of electrical or physical malfunction (do this *before* touching or operating the BankGuard PLUS Control or any other part of the installation). These warning signs include such things as smoke, fire, open fuses, crackling noises, loud buzzing, etc. If a malfunction is suspected, treat all components of the installation, including the control and associated mounting hardware, as if they were elevated to primary (HIGH) voltage.

You must follow the sequence of installation steps outlined in this instruction sheet to insure a safe and successful BankGuard PLUS Control installation.

2. *Make the connections to the terminal strips on the back of the control device.*

The BankGuard PLUS Control includes numbered terminal strips on the back of the enclosure for external control-wiring connections. (See Figure 1, Table 1, and the electrical diagrams in Instruction Sheet 1011-530.)

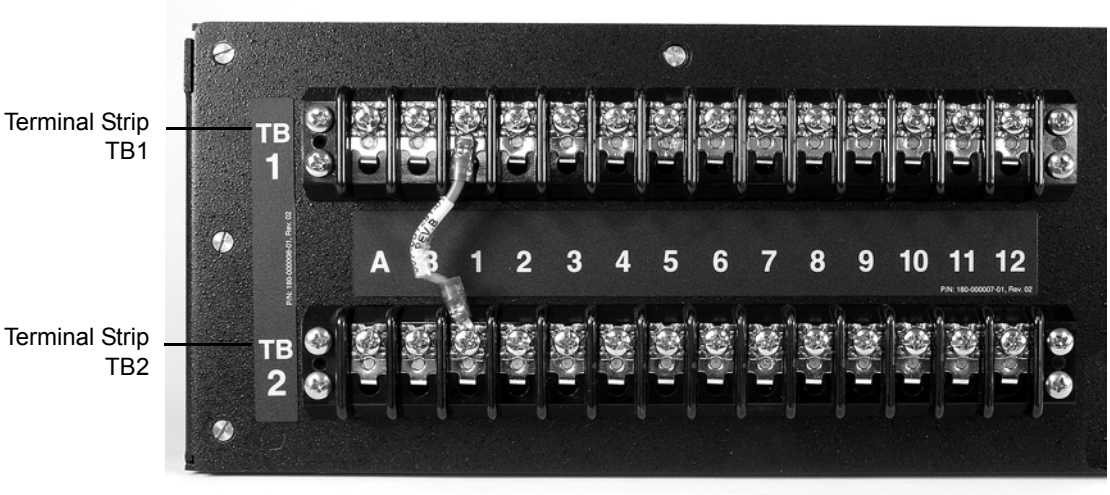

Figure 1
Terminal Strips on Rear of the Control

TB1-A	2nd Lockout (Normally Closed)
TB1-B	2nd Lockout (Normally Closed)
TB1-1	Surge Suppressor Return
TB1-2	Alarm (Normally Open)*
TB1-3	Alarm (Normally Open)*
TB1-4	Alarm (Normally Closed)*
TB1-5	Alarm (Normally Closed)*
TB1-6	Spare
TB1-7	2nd Alarm (Normally Open)*
TB1-8	2nd Alarm (Normally Open)*
TB1-9	Phase A voltage
TB1-10	Phase B voltage
TB1-11	Star voltage
TB1-12	Star voltage return
TB2-A	2nd Lockout (Normally Open)
TB2-B	2nd Lockout (Normally Open)
TB2-1	Chassis ground
TB2-2	Lockout (Normally Closed)
TB2-3	Lockout (Normally Closed)
TB2-4	Lockout (Normally Open)
TB2-5	Lockout (Normally Open)
TB2-6	“b”-contact
TB2-7	2nd Alarm (Normally Closed)*
TB2-8	2nd Alarm (Normally Closed)*
TB2-9	Control power – (AC Common)
TB2-10	Control power + (AC Hot)
TB2-11	Phase C voltage
TB2-12	Phase voltage return
	* See 1011-530, page 43 for alarm configuration options.

Table 1
Terminal Strips on Rear of the Control.

⚠ NOTICE ⚠

The BankGuard PLUS relay contacts are rated for:

16A @ 250VAC, 0.5A @125VDC, and 16A @ 24VDC.

Installation of an interposing relay is mandatory if these ratings could be exceeded.

Using the terminal strip illustrations, make the following connections:

A. The station ground, to TB2-1.

B. The output terminals of the potential device, with a system voltage rating as shown in Table 2, to TB1-11 and TB1-12.

Nominal Source Voltage (kV)	Potential Device System Voltage Rating (kV, Nominal)
below 23	23
23	23
34.5	23
46	23
69	34.5
115	69
138	69
161	138
230	138

Table 2
Potential Device Ratings

C. The opening circuit of the bank switch operator, to TB2-4 and TB2-5.

D. The closing circuit of the bank switch operator, to TB2-2 and TB2-3.

E. The control device power source (48 - 250 VDC, or 88 - 280 VAC, 48 - 62 Hz), to TB2-9 (for DC Negative, AC Neutral) and TB2-10 (for DC Positive, AC Hot).

F. The “b” contact of the auxiliary switch on the bank switch operator to TB2-6. Terminal TB2-10 may be used as the source for the wetting voltage. Set this contact to open near the fully-closed position of the capacitor bank switching device.

G. The space heater source, where applicable (120 VAC/60 Hz or 240 VAC/60 Hz).

H. Alarm circuit (optional).

I. If unbalance compensation is required, connect the output terminal(s) of the one (three) S&C 30-Volt-Ampere Potential Device(s) to TB1-9, TB1-10, DB2-11, and TB2-12 (phase voltage return).

3. If necessary, connect the potential devices or voltage transformers used for unbalance compensation.

If the BankGuard PLUS Control uses the optional unbalance compensation feature, you must also connect the output terminals of other voltage monitoring devices:

A. *To detect and compensate for the inherent capacitor bank imbalance only, in applications where the source is grounded,* connect to one of the following:

- A single S&C 30-Volt-Ampere Potential Device rated for full system voltage, connected to any phase of the station bus from which the capacitor bank is tapped.
- A single voltage transformer, connected to the station bus from which the capacitor bank is tapped – either phase-to-phase across any two phases or phase-to-ground on any phase.

B. *To detect and compensate for the inherent capacitor bank imbalance only, in applications where the source is a delta-connected tertiary transformer winding,* you must connect to a 1:1 voltage transformer, which is then connected to any secondary of a high-impedance grounding transformer. The voltage rating of the voltage transformer should match the secondary voltage rating of the grounding transformer. Be sure that the grounding transformer is connected to the station bus from which the capacitor bank is tapped. (The grounding transformer maintains the stability of phase-to-ground voltage relationships for all but fault conditions.)

C. *To detect and compensate for the inherent capacitor bank imbalance plus the system voltage imbalance, in applications where the source is grounded,* connect to one of the following:

- Three S&C 30-Volt-Ampere Potential Devices rated for full system voltage, each connected to a phase of the station bus from which the capacitor bank is tapped.
- Three voltage transformers, connected to the station bus, grounded-wye/grounded-wye.

D. *To detect and compensate for the inherent capacitor bank imbalance plus the system voltage imbalance, in applications where the source is a delta-connected tertiary transformer winding,* you must connect to three 1:1 voltage transformers, each of which is then connected to the secondary of a high-impedance grounding transformer. The voltage ratings of the voltage transformers should match the secondary voltage rating of the grounding transformer. Be sure that the grounding transformer is connected to the station bus from which the capacitor bank is tapped. (The grounding transformer maintains the stability of phase-to-ground voltage relationships for all but fault conditions.)

The circuits connecting the potential devices/voltage transformers to the BankGuard PLUS Control must be free of variable loads, variable voltage drops, and ground loops. This insures that the monitored voltages accurately represent the magnitude and phase angle of the bus voltages. Some possible errors affecting unbalance compensation are:

- Differences in the effective voltage ratios among the three S&C 30-Volt-Ampere Potential Devices/voltage transformers used to obtain system-derived voltages.
- Unbalanced or variable loading of the potential devices/voltage transformers used to obtain system-derived voltages. (Note that this means that station service transformers are not suitable.)
- Control-wiring voltage drops between the potential devices/voltage transformers and the control. To minimize voltage drops, connect the potential devices/voltage transformers and the control with dedicated circuits that are adequately sized.

  Example – A 1 amp current flowing through 1000 feet of #10 AWG wire results in a 1 V drop in the voltage signal. This may be enough to affect the performance of the protection scheme.
- Induced voltages in control wiring. Proper shielding is important.
- Ground loops caused by differences in voltage between the grounding points for the capacitor bank neutral-to-ground potential device/voltage transformer and those for the potential devices/voltage transformers used to obtain system-derived voltages. Preferably, the secondaries of all the potential devices/voltage transformers should be grounded at one point (per proposed ANSI C57.13.3, “Guide for the Grounding of Instrument Transformer Secondary Circuits and Cases”).

Energize and Test the Control

At this point, you can test the faceplate LEDs and buttons (see Figure 2).

A. Press the **POWER SUPPLY** button. If the control has power, the button will light up (green). If the **LOCKOUT INDICATOR** or **ALARM INDICATOR** LED turns ON, press the corresponding **RESET** button to clear it.

B. Press the **ENTER** button to test the faceplate LEDs. All LEDs should turn ON for 2 seconds.

C. Press the **NEXT** button to scroll through the information on the LCD. (If password protection is enabled, press the **NEXT** button again to start scrolling through password values.) If the display is blank, see the *Troubleshooting* Instruction Sheet 1011-550.

The Lockout and Alarm levels can be checked with the “Verify the Calculated Lockout Level” and “Verify the Calculated Alarm Level” procedures respectively, given in the *Setup* Instruction Sheet 1011-530. The “Field Determination of Need for Unbalance Compensation Procedure”, given in *Setup* Instruction Sheet 1011-530, can also be performed to determine if the Unbalance Compensation feature should be utilized.

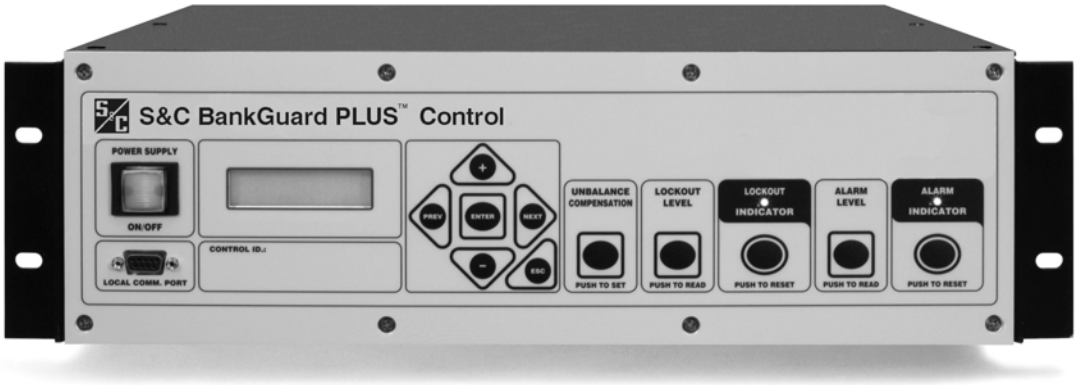

Figure 2
BankGuard PLUS Control Faceplate

Installing the Control - Grounded Wye Banks

Installation consists of several operations. The details of these operations, and the order in which they must be carried out, depend on the type of control device, and on local or customer codes, standards, and procedures. The following information is specific to BankGuard PLUS Controls protecting *grounded wye-connected capacitor banks*.

The required fuse blocks and fuses are furnished with the control, and you *must* install them. When you design the installation, be sure to provide adequate ventilation; the temperature near the control should not exceed 160°F. This is particularly important when the control is installed in a cabinet or when several controls are installed close together.

To insure that the control is not subjected to excess surges (ANSI Standard C37.90a), we recommend the following:

- Provide adequate shielding for the control-circuit wiring. Refer to the interconnection diagram furnished.
- For installations involving two or more grounded-wye capacitor banks in the same station, interconnect and ground their neutrals at a single point only. Also, to reduce inrush current and transient voltage disturbances, you may want to equip the capacitor bank switching devices with pre-insertion resistors or to provide current-limiting reactors.

For a grounded wye-connected capacitor bank, the BankGuard PLUS control requires three potential devices to monitor intermediate tap point voltages. The intermediate tap point for each phase of the bank should be located as follows:

- *For capacitor banks with an even number of series groups per phase,* the number of series groups between the tap point and ground should equal the number of series groups between the tap point and the line.
- *For capacitor banks with an odd number of series groups per phase,* the number of series groups between the tap point and ground should be one less than the number of series groups between the tap point and the line.

Install Control and Connect Wiring

1. Read, and make sure you understand, the following warnings before you begin to install or operate this equipment.

⚠ WARNING ⚠

These instructions do NOT replace the need for utility operation standards. Any conflict between the information in this document and utility practices should be reviewed by appropriate utility personnel and a decision made as to the correct procedures to follow.

Serious risk of personal injury or death may result from contact with electric distribution equipment when electrical isolation and grounding procedures are not followed. The equipment described in this document must be operated and maintained by qualified persons who are thoroughly trained and understand any hazards that may be involved. This document is written only for such qualified persons and is not a substitute for adequate training and experience in safety procedures for accessing high voltage equipment.

This control is connected to capacitors operating at primary voltage levels. High voltage may be present in the wiring to the control or the control itself during certain failures of the capacitor bank wiring or system grounding, or due to a failure of the capacitor bank itself. For this reason, access to the control should be treated with the same safety precautions that would be applied when accessing other high voltage lines and equipment. Follow all locally approved safety procedures when working on or around this control.

Do not energize the control power source entering the control enclosure until all wiring is complete.

Do not enable communications by connecting radios, fiber optic cables, or dedicated phone lines until this is called out in the instructions.

Before attempting to access an existing installation, check carefully for visible or audible signs of electrical or physical malfunction (do this *before* touching or operating the control or any other part of the installation). These warning signs include such things as smoke, fire, open fuses, crackling noises, loud buzzing, etc. If a malfunction is suspected, treat all components of the installation, including the control and associated mounting hardware, as if they were elevated to primary (HIGH) voltage.

You must follow the sequence of installation steps outlined in this instruction sheet to insure a safe and successful control installation.

2. *Make the connections to the terminal strips on the back of the control.*

The BankGuard PLUS Control includes numbered terminal strips on the back of the enclosure for external control-wiring connections. (See Figure 1, Table 1, and the electrical diagrams in Instruction Sheet 1011-530.)

Using the terminal strip illustrations, make the following connections:

A. The station ground, to TB2-1.

B. The output terminals of three S&C 30-Volt-Ampere Potential Devices to TB1-9, TB1-10, TB2-11, and TB2-12 (phase voltage return). The potential devices should have a system voltage rating at least equal to the voltage appearing between the intermediate tap points and ground, multiplied by $\sqrt{3}$.

C. The opening circuit of the bank switch operator, to TB2-4 and TB2-5.

D. The closing circuit of the bank switch operator, to TB2-2 and TB2-3.

E. The control device power source (48-250 VDC, 100-240 VAC, 50 or 60 Hz, as appropriate), to TB2-9 and TB2-10. Observe polarity if DC.

F. The “b” contact of the auxiliary switch on the bank switch operator to TB2-6. Set this contact to operate near the fully-closed position of the capacitor bank switching device. Terminal TB2-10 may be used as the source for the wetting voltage.

G. The space heater source, where applicable (120 VAC/60 Hz or 240 VAC/60 Hz).

H. Alarm circuit (optional) to terminals TB1-2 and TB1-3 for normally closed alarm contacts. Use terminals TB1-4 and TB1-5 for normally open contacts.

I. If unbalance compensation is required, connect the output of a 30-Volt-Ampere Potential Device to TB1-11 (Star voltage) and TB2-12 (Phase voltage return).

3. *Check the circuits connecting the potential devices to the control device.*

The circuits connecting the potential devices to the BankGuard PLUS control must be free of variable loads, variable voltage drops, and ground loops. This insures that the monitored voltages accurately represent the magnitude and phase angle of the bus voltages. Some possible errors affecting unbalance compensation are:

- Unbalanced or variable loading of the potential devices. (Note that this means that station service transformers are not suitable.)
- Control-wiring voltage drops between the potential devices and the control. To minimize voltage drops, connect the potential devices and the control with dedicated circuits that are adequately sized.

  Example – A 1 amp current flowing through 1000 feet of #10 AWG wire results in a 1 V drop in the voltage signal. This may be enough to affect the performance of the protection scheme.
- Induced voltages in control wiring. Proper shielding is important.

- Ground loops caused by differences in voltage between the grounding points of tap-point potential devices and those of phase-to-ground potential devices. Preferably, the secondaries of all the potential devices should be grounded at one point (per proposed ANSI C57.13.3, “Guide for the Grounding of Instrument Transformer Secondary Circuits and Cases”).

Energize and Test the Control

At this point, you can test most of the faceplate LEDs and buttons (see Figure 2 on page 10).

A. Press the **POWER SUPPLY** button. If the control has power, the button will light up (green). If the **LOCKOUT INDICATOR** or **ALARM INDICATOR** LED turns ON, press the corresponding **RESET** button to clear it.

B. Press the **ENTER** button to test the faceplate LEDs. All LEDs should turn ON for 2 seconds.

C. Press the **NEXT** button to scroll through the information on the LCD. (If password protection is enabled, press the **NEXT** button again to start scrolling through password values.) If the display is blank, see the *Troubleshooting* Instruction Sheet 1011-550.

The Lockout and Alarm levels can be checked with the “Verify the Calculated Lockout Level” and “Verify the Calculated Alarm Level” procedures respectively, given in the *Setup* Instruction Sheet 1011-530. The “Field Determination of Need for Unbalance Compensation Procedure”, given in *Setup* Instruction Sheet 1011-530, can also be performed to determine if the Unbalance Compensation feature should be utilized.

Installing the Control - Ungrounded Wye Shunt Reactors

Installation consists of several operations. The details of these operations, and the order in which they must be carried out, depend on the type of control, and on local or customer codes, standards, and procedures. The following information is specific to BankGuard PLUS Controls protecting *ungrounded wye-connected shunt reactors*.

The required fuse blocks and fuses are furnished with the control, and you *must* install them. When you design the installation, be sure to provide adequate ventilation; the temperature near the control should not exceed 160°F. This is particularly important when the control is installed in a cabinet or when several controls are installed close together.

Install Control and Connect Wiring

1. ***Read, and make sure you understand, the following warnings before you begin to install or operate this equipment.***

⚠ WARNING ⚠

These instructions do NOT replace the need for utility operation standards. Any conflict between the information in this document and utility practices should be reviewed by appropriate utility personnel and a decision made as to the correct procedures to follow.

Serious risk of personal injury or death may result from contact with electric distribution equipment when electrical isolation and grounding procedures are not followed. The equipment described in this document must be operated and maintained by qualified persons who are thoroughly trained and understand any hazards that may be involved. This document is written only for such qualified persons and is not a substitute for adequate training and experience in safety procedures for accessing high voltage equipment.

This control is connected to capacitors operating at primary voltage levels. High voltage may be present in the wiring to the control or the control itself during certain failures of the capacitor bank wiring or system grounding, or due to a failure of the capacitor bank itself. For this reason, access to the control should be treated with the same safety precautions that would be applied when accessing other high voltage lines and equipment. Follow all locally approved safety procedures when working on or around this control.

⚠ WARNING ⚠

Do not energize the control power source entering the control enclosure until all wiring is complete.

Do not enable communications by connecting radios, fiber optic cables, or dedicated phone lines until this is called out in the instructions.

Before attempting to access an existing installation, check carefully for visible or audible signs of electrical or physical malfunction (do this *before* touching or operating the control or any other part of the installation). These warning signs include such things as smoke, fire, open fuses, crackling noises, loud buzzing, etc. If a malfunction is suspected, treat all components of the installation, including the control and associated mounting hardware, as if they were elevated to primary (HIGH) voltage.

You must follow the sequence of installation steps outlined in this instruction sheet to insure a safe and successful control installation.

2. Make the connections to the terminal strips on the back of the control.

The BankGuard PLUS Control includes numbered terminal strips on the back of the enclosure for external control-wiring connections. (See Figure 1, Table 1, and the electrical diagrams in Instruction Sheet 1011-530.)

Using the terminal strip illustrations, make the following connections:

A. The station ground, to TB2-1.

B. The output terminals of the potential device, with a system voltage rating as shown in B. on page -11, to TB1-11 and TB1-12.

C. The opening circuit of the reactor switch operator, to TB2-4 and TB2-5.

D. The closing circuit of the reactor switch operator, to TB2-2 and TB2-3.

E. The control device power source (48, 125, or 250 VDC, 120 or 240 VAC, 50 or 60 Hz, as appropriate), to TB2-9 and TB2-10. Observe polarity if DC.

F. The “a” contact of the auxiliary switch on the reactor switch operator to TB2-6. Set this contact to close near the fully-closed position of the reactor switching device. Terminal TB2-10 may be used as the source for the wetting voltage.

G. The space heater source, where applicable (120 VAC/60 Hz or 240 VAC/60 Hz).

H. Alarm circuit (optional). to terminals TB1-2 and TB1-3 for normally closed alarm contacts. Use terminals TB1-4 and TB1-5 for normally open contacts.

I. If unbalance compensation is required, connect the output terminal(s) of the S&C 30-Volt-Ampere Potential Device(s). (See Number 3 below.)

3. *If necessary, connect the potential devices or voltage transformers used for unbalance compensation.*

If the BankGuard PLUS Control uses the optional unbalance compensation feature, you must also connect the output terminals of other voltage monitoring devices:

A. *To detect and compensate for the inherent reactor imbalance only, in applications where the source is grounded,* connect to one of the following:

- A single S&C 30-Volt-Ampere Potential Device rated for full system voltage, connected to any phase of the station bus from which the reactor is tapped. Connect to TB1-11 and TB2-12 (Phase voltage return).
- A single voltage transformer, connected to the station bus from which the reactor is tapped – either phase-to-phase across any two phases or phase-to-ground on any phase. Connect to TB1-11 and TB2-12 (Phase voltage return).

B. *To detect and compensate for the inherent reactor imbalance only, in applications where the source is a delta-connected tertiary transformer winding,* you must connect to a 1:1 voltage transformer, which is then connected to any secondary of a high-impedance grounding transformer. The voltage rating of the voltage transformer should match the secondary voltage rating of the grounding transformer. Be sure that the grounding transformer is connected to the station bus from which the reactor is tapped. (The grounding transformer maintains the stability of phase-to-ground voltage relationships for all but fault conditions.)

C. *To detect and compensate for the inherent reactor imbalance plus the system voltage imbalance, in applications where the source is grounded,* connect to one of the following:

- Three S&C 30-Volt-Ampere Potential Devices rated for full system voltage, each connected to a phase of the station bus from which the reactor is tapped. Connect to TB1-9, TB1-10, TB1-11, and TB2-12 (Phase voltage return).
- Three voltage transformers, connected to the station bus, grounded-wye/grounded-wye. Connect to TB1-9, TB1-10, TB1-11 and TB2-12 (Phase voltage return).

D. *To detect and compensate for the inherent reactor imbalance plus the system voltage imbalance, in applications where the source is a delta-connected tertiary transformer winding,* you must connect to three 1:1 voltage transformers, each of which is then connected to the secondary of a high-impedance grounding transformer. The voltage ratings of the voltage transformers should match the secondary voltage rating of the grounding transformer. Be sure that the grounding transformer is connected to the station bus from which the reactor is tapped. (The grounding transformer maintains the stability of phase-to-ground voltage relationships for all but fault conditions.)

The circuits connecting the potential devices/voltage transformers to the BankGuard PLUS Control must be free of variable loads, variable voltage drops, and ground loops. This insures that the monitored voltages accurately represent the magnitude and

phase angle of the bus voltages. Some possible errors affecting unbalance compensation are:

- Differences in the effective voltage ratios among the three S&C 30-Volt-Ampere Potential Devices/voltage transformers used to obtain system-derived voltages.
- Unbalanced or variable loading of the potential devices/voltage transformers used to obtain system-derived voltages. (Note that this means that station service transformers are not suitable.)
- Control-wiring voltage drops between the potential devices/voltage transformers and the control. To minimize voltage drops, connect the potential devices/voltage transformers and the control with dedicated circuits that are adequately sized.

  Example – A 1 amp current flowing through 1000 feet of #10 AWG wire results in a 1 V drop in the voltage signal. This may be enough to affect the performance of the protection scheme.
- Induced voltages in control wiring. Proper shielding is important.
- Ground loops caused by differences in voltage between the grounding points for the reactor neutral-to-ground potential device/voltage transformer and those for the potential devices/voltage transformers used to obtain system-derived voltages. Preferably, the secondaries of all the potential devices/voltage transformers should be grounded at one point (per proposed ANSI C57.13.3, “Guide for the Grounding of Instrument Transformer Secondary Circuits and Cases”).

Energize and Test the Control

At this point, you can test most of the faceplate LEDs and buttons (see on page -14).

A. Press the **POWER SUPPLY** button. If the control has power, the button will light up (green). If the **LOCKOUT INDICATOR** or **ALARM INDICATOR** LED turns ON, press the corresponding **RESET** button to clear it.

B. Press the **ENTER** button to test the faceplate LEDs. All LEDs should turn ON for 2 seconds.

C. Press the **NEXT** button to scroll through the information on the LCD. (If password protection is enabled, press the **NEXT** button again to start scrolling through password values.) If the display is blank, see the *Troubleshooting* Instruction Sheet 1011-550.

Check Communications Equipment

1. ***If this control uses a modem or radio, check that the communications device has power.***

   If a UtiliNet radio is installed with the control, the radio light should be blinking. If it is not, check that the radio connector is plugged into the SCADA port on the back of the control.

   ◆NOTE: The radio must be powered separately from its own AC source.

Communication Access Port

The S&C BankGuard PLUS Control includes a remote communications access port. When combined with suitable communications equipment and protocols, this permits you to remotely monitor and control the control device installation.

S&C Electric Company supports the BankGuard PLUS control with a variety of communications hardware options.

Supported manufacturers and hardware options include the following:

- Schlumberger's UtiliNet®
- Schlumberger's CellNet®
- Microwave Data Systems
- Modems (Bell 202,CDPD, or Hayes™-compatible)
- Cellular transceivers
- Fiber optic transceivers
- Motorola® Darcom™
- Other (contact S&C)

DNP 3.0 is the standard protocol in the BankGuard PLUS control.

All 8-bit, asynchronous SCADA protocols (at up to 9600 BAUD) are handled directly by the Control software.

Depending on the location of the control device, you may also need one or more relay radios to enable communication between this control device and the SCADA master station.

For more details, see the appropriate *Communications Supplement*, or contact S&C Electric Company.

This completes hardware installation and testing.
See the following *Setup* Instruction Sheet 1011-530 for how to set up the software in the control via IntelliLINK software or the faceplate LCD.

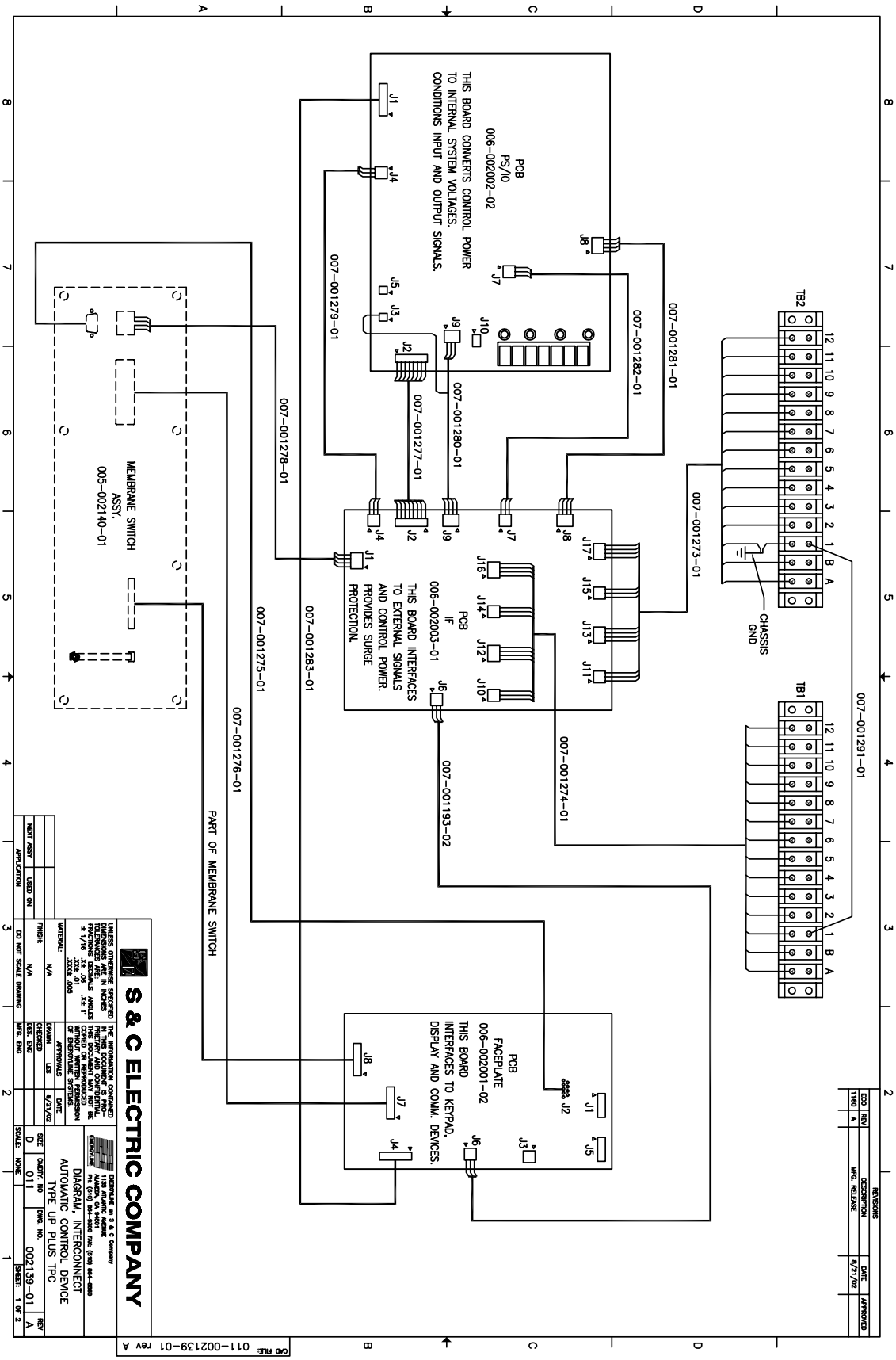
PCB
PS/IO
006-002002-02
THIS BOARD CONVERTS CONTROL POWER TO INTERNAL SYSTEM VOLTAGES; CONDITIONS INPUT AND OUTPUT SIGNALS.
PCB
IF
006-002003-01
THIS BOARD INTERFACES TO EXTERNAL SIGNALS AND CONTROL POWER. PROVIDES SURGE PROTECTION.
PCB
FACEPLATE
006-002001-02
THIS BOARD INTERFACES TO KEYPAD, DISPLAY AND COMM. DEVICES.
MEMBRANE SWITCH ASSY.
005-002140-01
TB1
TB2
CHASSIS GND
007-001281-01
007-001282-01
007-001273-01
007-001291-01
007-001280-01
007-001277-01
007-001279-01
007-001278-01
007-001274-01
007-001193-02
007-001275-01
007-001276-01
007-001283-01
PART OF MEMBRANE SWITCH
S & C ELECTRIC COMPANY
DIAGRAM, INTERCONNECT
AUTOMATIC CONTROL DEVICE
TYPE UP PLUS TPC
002139-01
011-002139-01 rev A

WIRING TABLE

ASSY. NO. (BOM)	ORIGIN		DESTINATION		COLOR	AWG
007-001273-01	INTERFACE PCB	J11-1	TB2	TB2-A (LOCKOUT #2 NC)	BRN	16
		J11-2		TB2-B (LOCKOUT #2 NC)	RED	16
		J11-3		TB2-1 (CHASSIS GND)	GRN	16
		J13-1		TB2-2 (LOCKOUT #1 NC)	BRN	16
		J13-2		TB2-3 (LOCKOUT #1 NC)	RED	16
		J13-3		TB2-4 (LOCKOUT #1 NO)	ORG	16
		J13-4		TB2-5 (LOCKOUT #1 NO)	YEL	16
		J15-1		TB2-6 (B-CONTACT)	BRN	16
		J15-2		TB2-7 (\ALARM #2 NC)	RED	16
		J15-3		TB2-8 (\ALARM #2 NC)	ORG	16
		J17-1		TB2-9 (POWER -)	BRN	16
		J17-2		TB2-10 (POWER +)	RED	16
		J17-3		TB2-11 (PHASE C)	ORG	16
		J17-4		TB2-12 (PHASE RETURN)	YEL	16
007-001274-01	INTERFACE PCB	J10-1	TB1	TB1-A (LOCKOUT #2 NC)	BRN	16
		J10-2		TB1-B (LOCKOUT #2 NC)	RED	16
		J10-3		TB1-1 (MOV RETURN)	ORG	16
		J12-1		TB1-2 (\ALARM #1 NO)	BRN	16
		J12-2		TB1-3 (\ALARM #1 NO)	RED	16
		J12-3		TB1-4 (\ALARM #1 NC)	ORG	16
		J12-4		TB1-5 (\ALARM #1 NC)	YEL	16
		J14-1		TB1-6 (SPARE)	BRN	16
		J14-2		TB1-7 (\ALARM #2 NO)	RED	16
		J14-3		TB1-8 (\ALARM #2 NO)	ORG	16
		J16-1		TB1-9 (PHASE A)	BRN	16
		J16-2		TB1-10 (PHASE B)	RED	16
		J16-3		TB1-11 (STARPOINT)	ORG	16
		J16-4		TB1-12 (STARPOINT RETURN)	YEL	16
007-001275-01	FP/PCB	J2-2	MEMBRANE SWITCH	DB9-2 (RCV)	RED	22
		J2-3		DB9-3 (TXD)	WHT	22
		J2-5		DB9-5 ((GND)	BLK	22
		——		GROUND	BARE	22
007-001276-01	FP/PCB	FP/PROC-J7	MEMBRANE SWITCH	LCD DISPLAY	FLAT	28
007-001277-01	INTERFACE PCB	J2-1	PS/IO	J2-1	BRN	18
		J2-2		J2-2	RED	18
		J2-3		J2-3	ORG	18
		J2-4		J2-4	YEL	18
		J2-5		J2-5	GRN	18
		J2-6		J2-6	BLU	18
		J2-7		J2-7	PUR	18
		J2-8		J2-8	GRY	18
007-001278-01	INTERFACE PCB	J1-1	PS/IO	POWER SWITCH SW1-4	BRN	16
		J1-2		POWER SWITCH SW1-3	RED	16
		J1-3		POWER SWITCH SW1-LAMP +	ORG	16
		J1-4		POWER SWITCH SW1-LAMP -	YEL	16
007-001279-01	INTERFACE PCB	J4-1	PS/IO	J4-1	BRN	16
		J4-2		J4-2	RED	16
		J4-3		J4-3	ORG	16
007-001280-01	INTERFACE PCB	J9-1	PS/IO	J9-1	BRN	16
		J9-2		J9-2	RED	16
		J9-3		J9-3	ORG	16
		J9-4		J3-2	YEL	16
007-001281-01	INTERFACE PCB	J8-1	PS/IO	J8-1	BRN	16
		J8-2		J8-2	RED	16
		J8-3		J8-3	ORG	16
		J8-4		J8-4	YEL	16

WIRING TABLE (CONT.)

ASSY. NO. (BOM)	ORIGIN		DESTINATION		COLOR	AWG
007-001282-01	INTERFACE PCB	J7-1	PS/IO	J7-1	BRN	16
		J7-2		J7-2	RED	16
		J7-3		J7-3	ORG	16
007-001283-01	FP/PCB	J2	PS/IO	J1	FLAT	26
007-001291-01	TB1	TB1-1	TB2	TB2-1 (JUMPER)	GRN	16

REVISIONS				
ECO	REV	DESCRIPTION	DATE	APPROVED
		SEE SHEET 1		

S & C ELECTRIC COMPANY

UNLESS OTHERWISE SPECIFIED DIMENSIONS ARE IN INCHES
TOLERANCES ARE:
FRACTIONS DECIMALS ANGLES
± 1/16 .X± .06 .X± 1°
.XX± .01
.XXX± .005

THE INFORMATION CONTAINED IN THIS DOCUMENT IS PROPRIETARY AND CONFIDENTIAL. THIS DOCUMENT MAY NOT BE COPIED OR REPRODUCED WITHOUT WRITTEN PERMISSION OF ENERGYLINE SYSTEMS.

ENERGYLINE
ENERGYLINE an S & C Company
1135 ATLANTIC AVENUE
ALAMEDA, CA 94501
PH: (510) 864-5300 FAX: (510) 864-5860

MATERIAL: N/A
FINISH: N/A
DO NOT SCALE DRAWING

APPROVALS		DATE
DRAWN	LES	8/21/02
CHECKED		
DES. ENG		
MFG. ENG		

DIAGRAM, INTERCONNECT
AUTOMATIC CONTROL DEVICE
TYPE UP PLUS TPC

SIZE	CMDTY. NO	DWG. NO.	REV
D	011	002139-01	A

SCALE: NONE SHEET: 2 OF 2

NEXT ASSY | USED ON
APPLICATION

CAD FILE: 011-002139-01 rev A

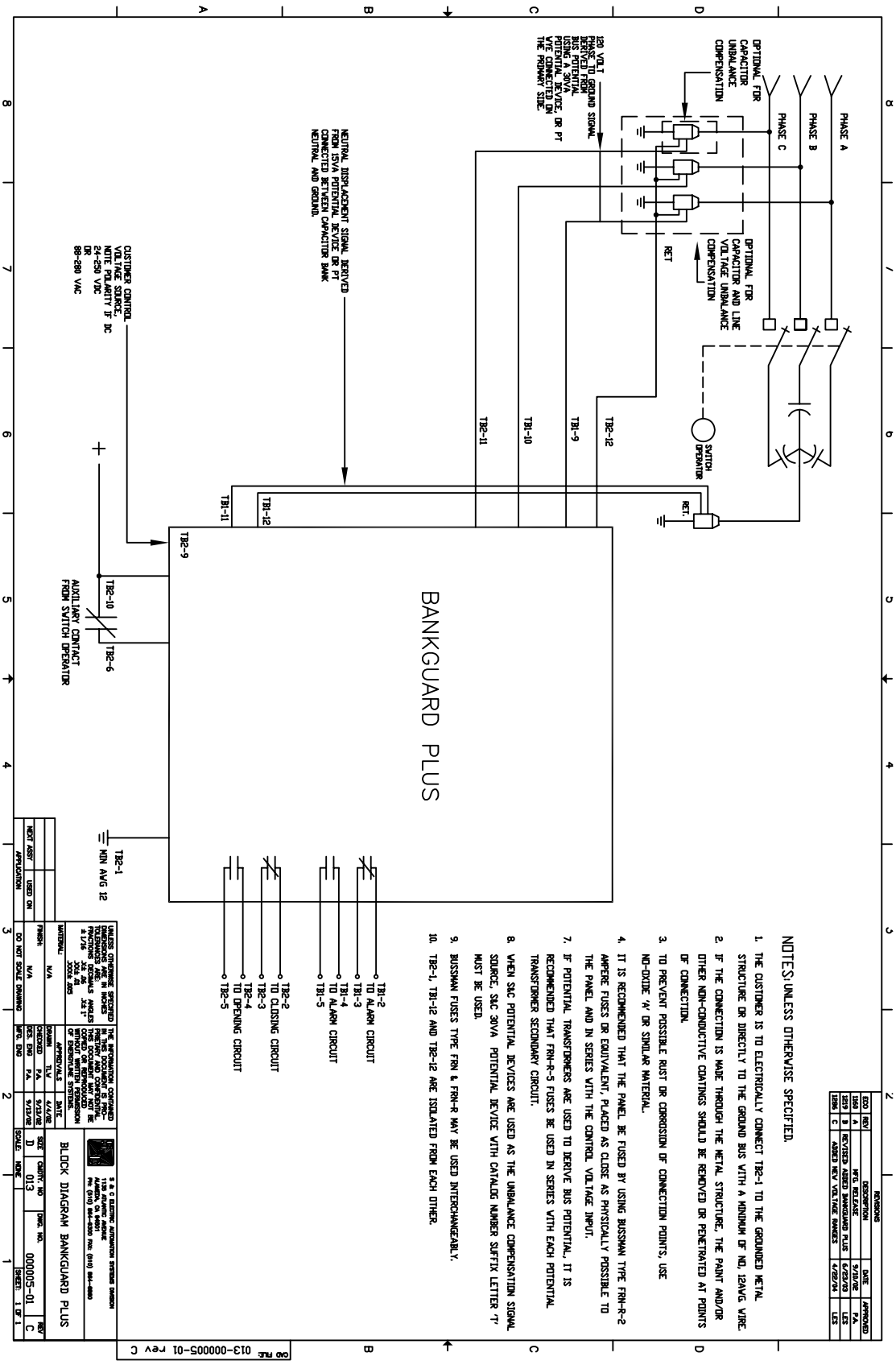
PHASE A
PHASE B
PHASE C
OPTIONAL FOR CAPACITOR UNBALANCE COMPENSATION
OPTIONAL FOR CAPACITOR AND LINE VOLTAGE UNBALANCE COMPENSATION
120 VOLT PHASE TO GROUND SIGNAL DERIVED FROM BUS POTENTIAL USING A 30VA POTENTIAL DEVICE, OR PT CONNECTED ON THE PRIMARY SIDE.
NEUTRAL DISPLACEMENT SIGNAL DERIVED FROM 15VA POTENTIAL DEVICE OR PT CONNECTED BETWEEN CAPACITOR BANK NEUTRAL AND GROUND.
CUSTOMER CONTROL VOLTAGE SOURCE, NOTE POLARITY IF DC
24-250 VDC
OR
88-280 VAC
AUXILIARY CONTACT FROM SWITCH OPERATOR
RET
SWITCH OPERATOR
TB2-12
TB1-9
TB1-10
TB2-11
TB1-11
TB1-12
TB2-9
TB2-10
TB2-6
TB2-1
MIN AVG 12
BANKGUARD PLUS
TB1-2
TO ALARM CIRCUIT
TB1-3
TB1-4
TO ALARM CIRCUIT
TB1-5
TB2-2
TO CLOSING CIRCUIT
TB2-3
TB2-4
TO OPENING CIRCUIT
TB2-5
REVISIONS
ZONE REV DESCRIPTION DATE APPROVED
1000 A INITIAL RELEASE 9/15/98 PA
1219 B REVISED ADDED BANKGUARD PLUS 6/23/03 LES
1596 C ADDED NEW VOLTAGE RANGES 4/28/04 LES
NOTES:UNLESS OTHERWISE SPECIFIED.
1. THE CUSTOMER IS TO ELECTRICALLY CONNECT TB2-1 TO THE GROUNDED METAL STRUCTURE OR DIRECTLY TO THE GROUND BUS WITH A MINIMUM OF NO. 12AWG. WIRE.
2. IF THE CONNECTION IS MADE THROUGH THE METAL STRUCTURE, THE PAINT AND/OR OTHER NON-CONDUCTIVE COATINGS SHOULD BE REMOVED OR PENETRATED AT POINTS OF CONNECTION.
3. TO PREVENT POSSIBLE RUST OR CORROSION OF CONNECTION POINTS, USE NO-OXIDE 'A' OR SIMILAR MATERIAL.
4. IT IS RECOMMENDED THAT THE PANEL BE FUSED BY USING BUSSMAN TYPE FRN-R-2 AMPERE FUSES OR EQUIVALENT, PLACED AS CLOSE AS PHYSICALLY POSSIBLE TO THE PANEL AND IN SERIES WITH THE CONTROL VOLTAGE INPUT.
7. IF POTENTIAL TRANSFORMERS ARE USED TO DERIVE BUS POTENTIAL, IT IS RECOMMENDED THAT FRN-R-5 FUSES BE USED IN SERIES WITH EACH POTENTIAL TRANSFORMER SECONDARY CIRCUIT.
8. WHEN SAC POTENTIAL DEVICES ARE USED AS THE UNBALANCE COMPENSATION SIGNAL SOURCE, SAC 30VA POTENTIAL DEVICE WITH CATALOG NUMBER SUFFIX LETTER 'T' MUST BE USED.
9. BUSSMAN FUSES TYPE FRN & FRN-R MAY BE USED INTERCHANGEABLY.
10. TB2-1, TB1-12 AND TB2-12 ARE ISOLATED FROM EACH OTHER.
UNLESS OTHERWISE SPECIFIED THE INFORMATION CONTAINED IN THIS DOCUMENT IS PROPRIETARY TO S&C ELECTRIC COMPANY. DIMENSIONS ARE IN INCHES TOLERANCES: DECIMALS ANGLES ±1/16 ±1° .XX ±.06 .XXX ±.005
THIS DOCUMENT MAY NOT BE COPIED OR REPRODUCED WITHOUT PERMISSION OF ENERGYLINE SYSTEMS
MATERIAL: N/A
FINISH: N/A
DO NOT SCALE DRAWING
APPROVALS DATE
DRAWN TLV 4/4/98
CHECKED PA 9/15/98
DES. ENG PA 9/15/98
MFG. ENG PA 9/15/98
NEXT ASSY USED ON
APPLICATION
S & C ELECTRIC AUTOMATION SYSTEMS DIVISION
1135 ATLANTIC AVENUE
ALBANY, NY 12207
PH: (518) 464-4000 FAX: (518) 464-4080
BLOCK DIAGRAM BANKGUARD PLUS
SIZE D CAGE CODE
DWG. NO. 000005-01 REV C
SCALE: NONE SHEET 1 OF 1
CAD FILE 013-000005-01 rev C