# INSTRUCTIONS

GEK- 1270

AUXILIARY RELAY

TYPE NGA15J

GENERAL ELECTRIC

## CONTENTS

# AUXILIARY RELAY

## TYPE NGA15J

## DESCRIPTION

The NGA15J is a d-c operated auxiliary relay that has two transfer contacts and is supplied in a small molded case. The internal connections are shown in Figure 1.

## APPLICATION

The NGA15J is intended for use in a permissive underreaching transferred trip scheme to initiate a continuous transferred trip signal when the associated circuit breaker is open. To provide this function the NGA15J is operated by the 52/b switch of the breaker. The NGA15J is well suited for this function because of its time delay pickup and fast dropout.

## RATINGS

The relay contacts will close and carry 30 amperes DC momentarily for tripping duty at control voltages of 250V DC or less. These contacts will carry 3 amperes continuously and have an interrupting rating as given in Table A.

TABLE A

| VOLTS | CURRENT INDUCTIVE* | CURRENT NON-INDUCTIVE |
|---|---|---|
| 48 | 1.0 | 3.0 |
| 125V DC | 0.5 | 1.5 |
| 250V DC | 0.25 | 0.75 |
| 115V 60 CYC. | 0.75 | 2.0 |
| 230V 60 CYC. | 0.5 | 1.0 |

* Induction of Average Trip Coil

The resistance values of the various operating coils used in these relays are given in the table of Figure 1.

## CHARACTERISTICS

The double coil arrangement on the core of the NGA15J provides the means for obtaining time delay pick-up with fast dropout. With the relay deenergized, the floating coil is short circuited and acts as a slug to slow the buildup of flux in the core, thus delaying the pickup. After the relay has picked up, the floating coil is open circuited and so does not delay the dropout when the coil is deenerigzed. Figure 1 shows the relay internal connections. The table in Figure 1 gives the operating times for this relay.

## CONSTRUCTION

The NGA15J relay consists of a telephone relay type unit mounted in a small molded case. Figure 1 shows the relay internal connections and Figure 2 shows a typical telephone relay used in these relays.

The relay is back connected and is available for either surface or semi-flush panel mounting. Figure 3 shows the outline and panel drilling diagram for surface mounted relays, Figure 4 for semi flush mounted relays.

## RECEIVING, HANDLING AND STORAGE

These relays, when not included as a part of a control panel, will be shipped in cartons designed to protect them against damage. Immediately upon receipt of a relay, examine it for any damage sustained in transit. If injury or damage resulting from rough handling is evident, file a damage claim at once with

the transportation company and promptly notify the nearest General Electric Apparatus Sales Office.

Reasonable care should be exercised in unpacking. The relays that are not to be installed immediately should be stored in their original cartons in a place that is free from moisture, dust and metallic chips. Foreign matter collected on the outside of the case may find its way inside when the cover is removed and cause trouble in the operation of the relay.

When the relay is received, check the nameplate stamping to insure that model number and rating of the relay received agree with the requisition. Check the operation manually and also check that the contact gap and wipe agree with values given under the section on ADJUSTMENTS AND INSPECTION.

## ADJUSTMENTS AND INSPECTION

The relay has been adjusted at the factory to pickup at 80 percent or less of rated voltage and to have the required operating times at rated voltage. Further adjustment should not be required. If necessary the pickup voltage can be decreased by decreasing the spacing of the armature from the pole face; however, pickup time will also be decreased.

With the relay deenergized each normally open contact should have a gap of .010" - .015". Observe the wipe on each normally closed contact by deflecting the stationary contact member towards the frame. Wipe should be approximately .005".

The wipe on each normally open contact should be approximately .005". This can be checked by inserting a .005" shim between the residual screw and the pole piece and operating armature by hand. The normally open contacts should make before the residual screw strikes the shim.

After each adjustment the contact gap and wipe must be rechecked and the contact pressure should never be less than 10 grams measured at the contact tips.

All of the adjustments in this section may be most easily made with the tools supplied in the relay tool kit XRT11A1.

## SERVICING

For cleaning contacts a flexible burnishing tool should be used. This consists of an etched roughened strip of flexible metal, resembling a superfine file which removes corroded material quickly without scratching the surface. The flexibility of the tool insures the cleaning of the actual points of contact. Never use knives, files, abrasive paper or cloth to clean contacts. A burnishing tool as described above can be obtained from the factory.

## RENEWAL PARTS

It is recommended that sufficient quantities of renewal parts be carried in stock to enable the prompt replacement of any that are worn, broken or damaged.

When ordering renewal parts, address the nearest Sales Office of the General Electric Company, specify quantity required, name of the part wanted, and give complete nameplate data. If possible, give the General Electric requisition number on which the relay was furnished.

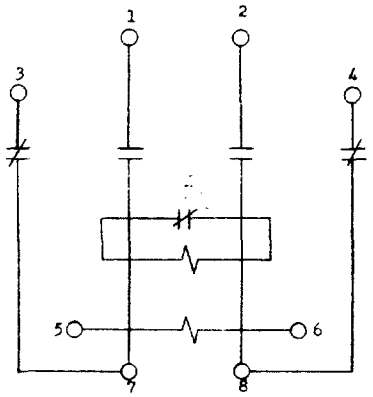


| GROUP | DC VOLTS | OPERATING COIL OHMS | P.U. TIME MILLISECONDS | D.O. TIME MILLISECONDS |
|---|---|---|---|---|
| 1 | 250 | 50,000 | 60-70 | < 16 |
| 2 | 125 | 12,600 | 60-70 | < 16 |
| 3 | 48 | 2000 | 60-70 | < 16 |
| | | | | |

FIG. 1 (0178A9170-1) Internal Connections Diagram And Table Of Ratings For The **NGA15J Relay** (Rear View)

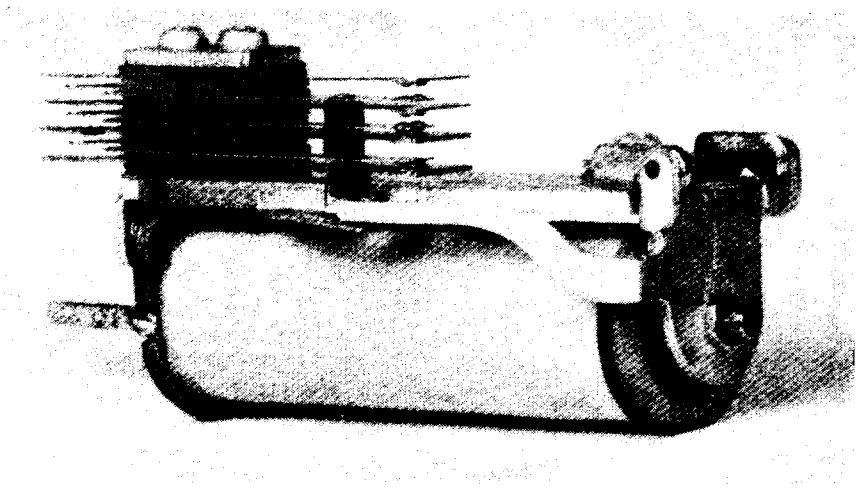

FIG. 2 (8012106) Typical Telephone Relay Unit Used In The NGA15J Relay

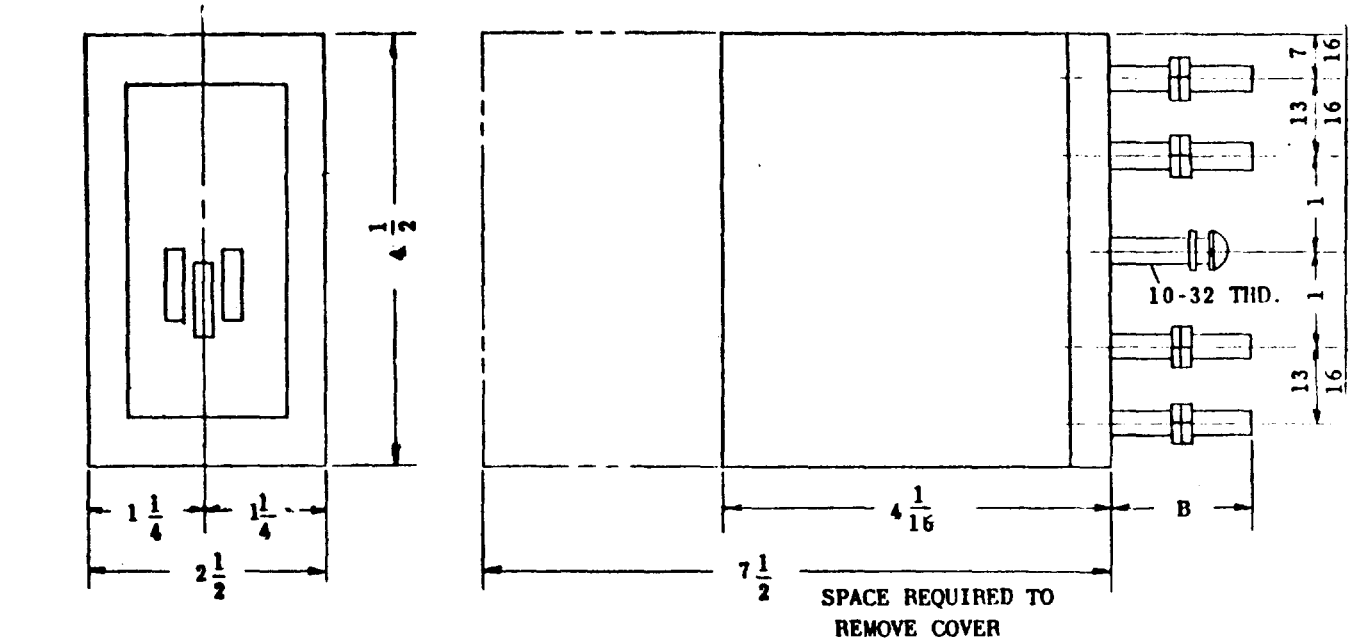


OUTLINE

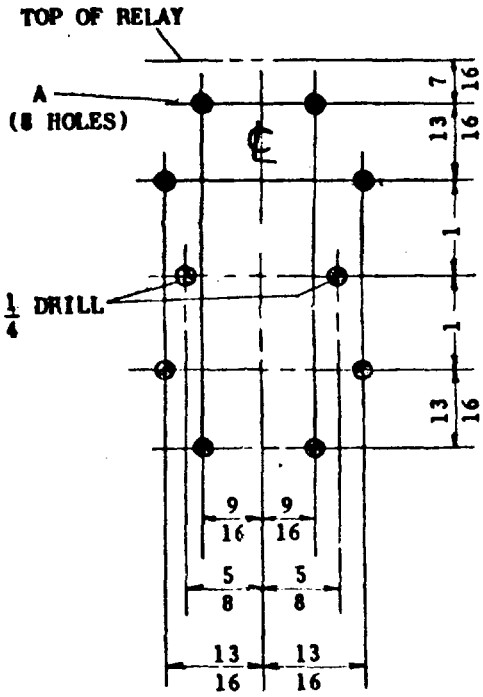


| TYPE OF PANEL | A | B |
|---|---|---|
| INSULATING | 7/16 | 2-13/16 |
| STEEL | 9/16 | 1- 3/8 |

PANEL DRILLING (FRONT VIEW)

FIG. 3 (0148A3979-5) Outline And Panel Drilling Dimensions For The Surface Mounted NGA15J Relay

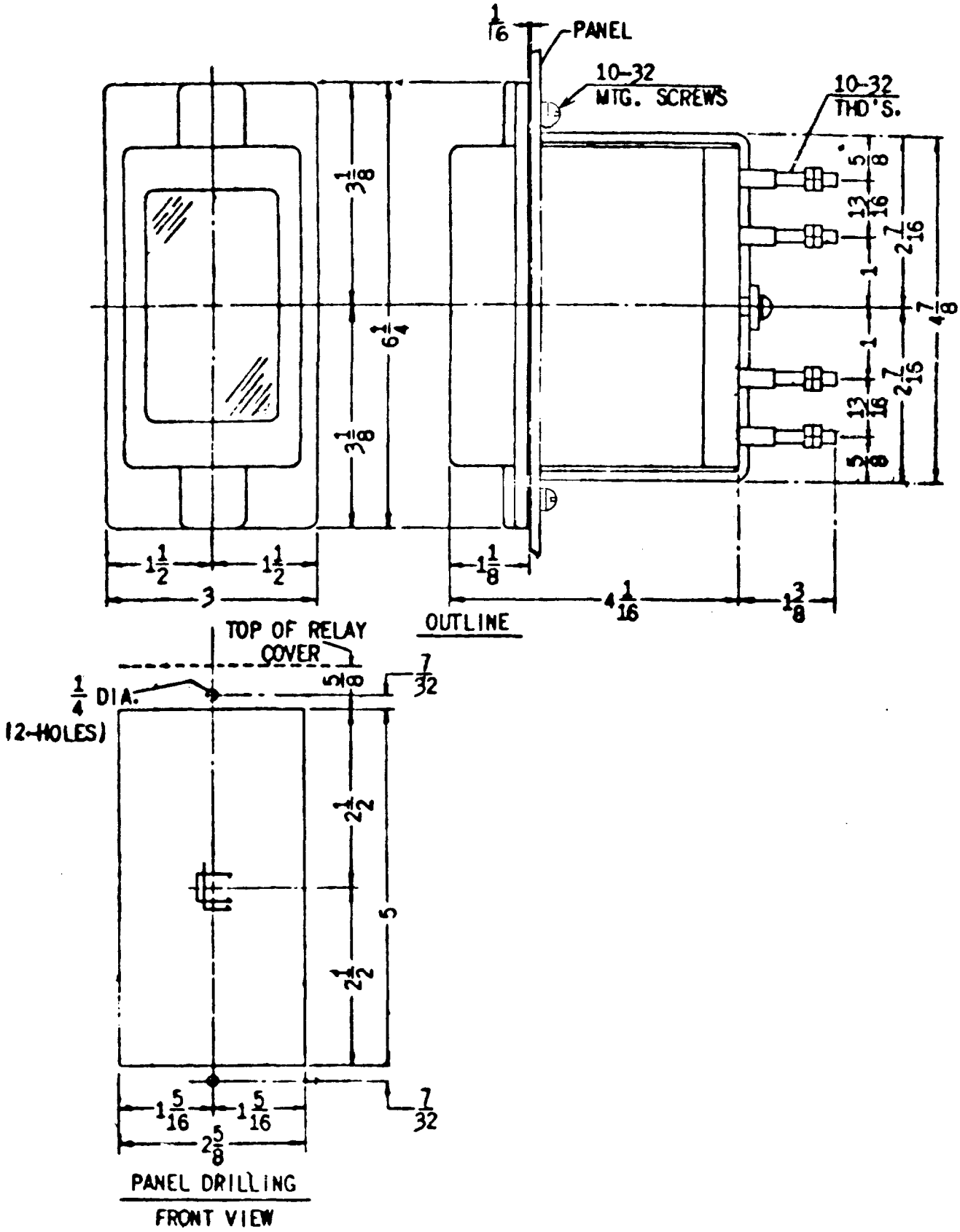


FIG. 4 (0148A3978-6) Outline And Panel Drilling Dimensions For The Semi-Flush Mounted NGA15J(-)F Relay

GE Power Management

215 Anderson Avenue
Markham, Ontario
Canada L6E 1B3
Tel: (905) 294-6222
Fax: (905) 201-2098
www.ge.com/indsys/pm