Cutler-Hammer

I.B. 17555D

INSTRUCTIONS FOR INSTALLATION, OPERATION AND MAINTENANCE OF THE CUTLER-HAMMER DIGITRIP 3000 SERIES OF PROTECTIVE RELAYS

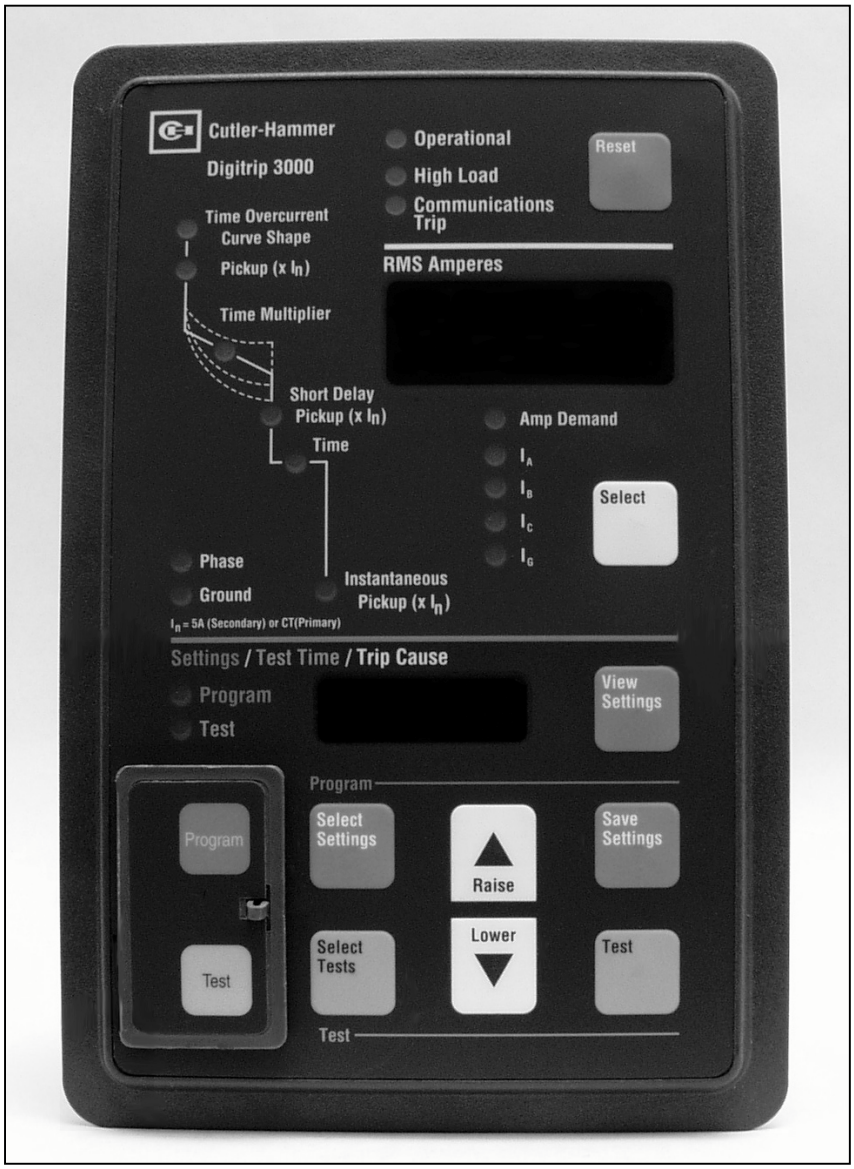

Effective July 2002
Supersedes I.B. 17555C dated November 1999

TABLE OF CONTENTS

SECTION 1: INTRODUCTION 2

1-1 PRELIMINARY COMMENTS AND SAFETY PRECAUTIONS 2
1-1.1 WARRANTY AND LIABILITY INFORMATION 3
1-1.2 SAFETY PRECAUTIONS 3
1-2 GENERAL INFORMATION 3
1-3 FUNCTIONS/FEATURES/OPTIONS 4
1-4 STANDARDS 6

SECTION 2: FUNCTIONAL DESCRIPTION 6

2-1 PROTECTION, TESTING AND COMMUNICATION CAPABILITIES 6
2-1.1 RMS SENSING 6
2-1.2 PICKUP SETTING 6
2-1.3 TIME SETTING 7
2-1.4 PROTECTION CURVE SETTINGS 7
2-1.5 INTEGRAL TESTING 11
2-1.6 COMMUNICATIONS 11
2-2 PROTECTIVE RELAY HARDWARE 14
2-2.1 FRONT OPERATIONS PANEL 14
2-2.2 Rear Access Panel 16
2-2.3 EXTERNAL HARDWARE 18

SECTION 3: OPERATION 20

3-1 INTRODUCTION 20
3-2 POWER-UP AND SELF TESTING 20
3-3 PANEL OPERATIONS 20
3-3.1 CHARACTERISTIC CURVE 20
3-3.2 PROGRAM MODE 26
3-3.3 PROGRAMMING OVERVIEW 27
3-3.4 TEST MODE 28
3-4 COMMUNICATIONS FUNCTION 28
3-4.1 ADDRESS AND BAUD RATE SETTINGS 29

SECTION 4: APPLICATION CONSIDERATIONS 29

4-1 ZONE INTERLOCKING CAPABILITIES 29

SECTION 5: INSTALLATION, STARTUP AND TESTING 32

5-1 INTRODUCTION 32
5-2 PANEL PREPARATION 32
5-2.1 CUTOUT 32
5-2.2 MOUNTING 32
5-3 REPLACING DIGITRIP MV WITH DIGITRIP 3000 32
5-4 WIRING 33
5-5.1 BEFORE POWER APPLICATION 34
5-5.2 INITIAL POWER APPLICATION 34
5-6 MISCELLANEOUS TESTING 34

SECTION 6: MAINTENANCE AND STORAGE 34

6-1 GENERAL 34
6-1.1 STORAGE 34
6-2 TROUBLESHOOTING GUIDE (TABLE 6.1) 34
6-3 REPLACEMENT 34

SECTION 7: TIME-CURRENT CURVES 37

7-1 DIGITRIP 3000 INVERSE TIME OVERCURRENT CURVES 37
7-2 DIGITRIP 3000 CURVE EQUATIONS 61

APPENDIX A 62

A1.0 INTRODUCTION 62

A2.0 GENERAL DESCRIPTION....62
A3.0 INSTALLATION....62
A3.1 PANEL PREPARATION....62
A3.2 DIGITRIP 3001 DRAWOUT RELAY PARTS LIST....62
A3.3 MOUNTING THE DRAWOUT OUTER CASE....62
A4.0 WIRING AND SETUP....63
A5.0 APPLICATION CONSIDERATIONS....67
A6.0 DRAWOUT OPERATION....67
A6.1 INSERTING THE RELAY....67
A6.2 REMOVING THE RELAY....68

APPENDIX B....69

B1.0 INTRODUCTION....69
B2.0 GENERAL DESCRIPTION....69
B3.0 FUNCTIONAL DESCRIPTION....71
B4.0 INSTALLATION....71
B4.1 PANEL PREPARATION....71
B4.2 MOUNTING THE DIGITRIP 3000 WITH DUALSOURCE POWER SUPPLY....71
B5.0 WIRING AND SETUP....73
B6.0 APPLICATION CONSIDERATIONS....73
B6.1 SENSITIVITY AND CT RATIOS....73
B6.2 TRIPPING ON FACILITY ENERGIZATION....73
B6.3 CT SATURATION....73
B6.4 BURDEN DATA....75
B7.0 TESTING THE DUAL-SOURCE POWER SUPPLY....75
B7.1 IN-SERVICE TEST....75
B7.2 LAB BENCH TEST....75

SECTION 1: INTRODUCTION

1-1 PRELIMINARY COMMENTS AND SAFETY PRECAUTIONS

This technical document installation, application, operation, and maintenance of the Cutler-Hammer Digitrip 3000 Family of Protective Relays.

Table 1.1 shows all of the DT3000 Family products that are covered by this Instruction Book.

Appendix A and B describe product specifics regarding the DT3000 Drawout Case and the DT3000 Dual Source Power Supply. **THE INFORMATION PROVIDED IN THE APPENDICES SUPERCEDES THAT IN THE MAIN PORTION OF THIS BOOK.**

The DT3001 and DT3031 Drawout Case styles replacement parts can be ordered separately. Please refer to Table 1.2 for a list of these style numbers.

NOTE: THE TERM "DT3000", AS USED IN THIS INSTRUCTION BOOK I.B. 17555D, IMPLIES TO ALL DT3000 FAMILY PRODUCT STYLES LISTED IN TABLES 1.1 AND 1.2. INDIVIDUAL STYLE NAMES (I.E. DT3030, DT3031, ETC.) WILL BE USED WHERE PRODUCT STYLES DIFFER.

This document is provided as a guide for authorized and qualified personnel only. Please refer to the specific CAUTION in Section 1-1.2 before proceeding. If further information is required regarding a particular installation, application or maintenance activity, please contact a Cutler-Hammer representative.

TABLE 1.1 DT3000 PROTECTIVE RELAY FAMILY STYLES

DT3000 NEW STYLE #	DT3000 OLD STYLE #	CATALOG #	DESCRIPTION	NOTES
4D13120G21	4D13120G11	DT3000	Protective Relay – Standard FW, HR PS, PM	
4D13120G22	4D13120G12	DT3100	Protective Relay – Chicago FW, HR PS, PM	
4D13120G24	4D13120G04	DT3030	Protective Relay – Standard FW, LR PS, PM	
4D13124G21	4D13124G11	DT3001	Protective Relay – Standard FW, HR PS, DO	See Notes 1
4D13124G22	4D13124G12	DT3101	Protective Relay – Chicago FW, HR PS, DO	
4D13124G24	4D13124G04	DT3031	Protective Relay – Standard FW, LR PS, DO	See Notes 1
4D13125G21	4D13125G11	DT3010	Protective Relay – Standard FW, 120V DS PS, PM	See Notes 2
4D13125G22	4D13125G12	DT3020	Protective Relay – Standard FW, 240V DS PS, PM	See Notes 2

TABLE 1.2 DT3000 DRAWOUT CASE REPLACEMENT PARTS

DT3000 NEW STYLE #	DT3000 OLD STYLE #	CATALOG #	DESCRIPTION	NOTES
66D2001G21	66D2001G11	DT3001-IC	DT3001 Protective Relay – Inner Case Only	See Notes 1
66D2001G22	66D2001G12	DT3101-IC	DT3101 Protective Relay – Inner Case Only	
66D2001G24	66D2001G14	DT3031-IC	DT3031 Protective Relay – Inner Case Only	See Notes 1
66D2005G21	66D2005G11	DT3001-OC	DT3001 Outer Case Only For use with DT3XXX-IC Protective Relays	See Notes 1

Abbreviations:
DS PS = Dual Source Power Supply
LR PS = Low Range 24-48Vdc Power Supply
HR PS = High Range 120-240Vac / 48-250Vdc Power Supply
IC = Inner Chassis
PM = Panel Mount
DO = Draw Out
FW = Firmware
OC = Outer Chassis

1. Additional product specifications and information in Appendix A.
2. Additional product specifications and information in Appendix B.

Notes:

1-1.1 WARRANTY AND LIABILITY INFORMATION

NO WARRANTIES, EXPRESSED OR IMPLIED, INCLUDING WARRANTIES OF FITNESS FOR A PARTICULAR PURPOSE OF MERCHANTABILITY, OR WARRANTIES ARISING FROM COURSE OF DEALING OR USAGE OF TRADE, ARE MADE REGARDING THE INFORMATION, RECOMMENDATIONS AND DESCRIPTIONS CONTAINED HEREIN.

In no event will Cutler-Hammer be responsible to the purchaser or user in contract, in tort (including negligence), strict liability or otherwise for any special, indirect, incidental or consequential damage or loss whatsoever. Including but not limited to damage or loss of use of equipment, plant or power system, cost of capital, loss of power, additional expenses in the use of existing power facilities or claims against the purchaser or user by its customers resulting from the use of the information and descriptions contained herein.

1-1.2 SAFETY PRECAUTIONS

All safety codes safety standards and/or regulations must be strictly observed in the installation, operation and maintenance of this device.

WARNING

THE WARNINGS AND CAUTIONS INCLUDED AS PART OF THE PROCEDURAL STEPS IN THIS DOCUMENTARE ARE FOR PERSONNEL SAFETY AND PROTECTION OF EQUIPMENT FROM DAMAGE. THIS IS AN EXAMPLE OF A TYPICAL WARNING LABEL. THIS WILL HELP TO ENSURE THAT PERSONNEL ARE ALERTED TO CAUTIONS THAT APPEAR THROUGHOUT THE DOCUMENT.

CAUTION

COMPLETELY READ AND UNDERSTAND THE MATERIAL PRESENTED IN THIS DOCUMENT BEFORE ATTEMPTING INSTALLATION, OPERATION OR APPLICATION OF THE EQUIPMENT. ONLY QUALIFIED PERSONS SHOULD BE PERMITTED TO PERFORM ANY WORK ASSOCIATED WITH THE EQUIPMENT. ANY WIRING INSTRUCTIONS PRESENTED IN THIS DOCUMENT MUST BE FOLLOWED PRECISELY. FAILURE TO DO SO COULD CAUSE PERMANENT EQUIPMENT DAMAGE, BODILY INJURY OR DEATH.

1-2 GENERAL INFORMATION

The Digitrip 3000 Protective Relay is a panel mounted multifunction, microprocessor based overcurrent relay, designed for both ANSI and IEC applications (Figures 1-1 and 1-2). It is a self-contained device that operates from either ac or dc control power (the DT3030 & DT3031 operate from dc power only) and provides true rms sensing of each phase and ground current. Only one relay is required per three-phase circuit. An integral part of each device is the current monitoring and the ability to select protective functions.

Fig. 1-1 Digitrip 3000 Protective Relay (Front View)

CAUTION

THE LOSS OF CONTROL VOLTAGE WILL CAUSE THE DIGITRIP 3000 TO BE INOPERABLE. IF AC CONTROL VOLTAGE IS USED, IF AC CONTROL VOLTAGE IS USED AN APPROPRIATE RELIABLE POWER SOURCE/SCHEME SHOULD BE SELECTED (POSSIBLY AN UPS SYSTEM) TO SUPPLY POWER TO THE RELAY.

The Digitrip 3000 Protective Relay provides protection for most types of medium voltage electrical power distribution systems. It was designed for use with Cutler-Hammer Type VCP-W vacuum circuit breakers, as well as other medium and high voltage circuit breakers. Digitrip 3000 Protective Relays are compatible for use with all circuit breakers utilizing a shunt trip coil.

Thermal curves, plus ANSI and IEC inverse time overcurrent curves provide close coordination with both downstream and upstream protective devices. One Digitrip 3000 Protective Relay replaces the following conventional electromechanical overcurrent relays: 1) an ammeter, 2) a demand ammeter, 3) an ammeter switch, 4) in some situations, a lockout relay switch (device 86).

All Digitrip 3000 Protective Relays include a built-in INCOM communication capability that is compatible with the Cutler-Hammer PowerNet and IMPACC Systems.

1-3 FUNCTIONS/FEATURES/OPTIONS

The primary function of the Digitrip 3000 Protective Relay is overcurrent protection. This is achieved by analyzing the secondary current signals received from the switch gear current transformers. When predetermined current levels and time delay settings are exceeded, the closing of trip contact(s) is used to initiate breaker tripping.

The Digitrip 3000 Protective Relay operates from the secondary output of standard switch gear current transformers rated at = 5 amperes. It is configured to fit specific distribution system requirements. The phase and ground Ct ratios can be independently programmed over a range of 5:5 to 5000:5. Refer to Table 2.2 for the available Ct ratio settings.

Protective functions can also be configured with the circuit breaker in the open or closed position. The DIP Switch S2, located on the rear of the relay, is used to control closed breaker settings (Figure 1-3). Refer to Paragraph 2-2.2 and Table 5.1 for additional information.

Inverse time overcurrent protection for the phase element cannot be disabled. This insures that all phase protection cannot be disabled. The relay also automatically exits the program mode, if there is no programming activity for 2-1/2 minutes. Programming and test mode security is provided by a sealed, hinged access cover on the front of the relay. Direct reading displays indicate the value currently being considered, while multi-colored LED's indicate operational conditions and specific functions.

In addition to performing a continuous self-testing of internal circuitry, all Digitrip 3000 Protective Relays include field testing capabilities that are accessible from the front. To check that all tripping features are functioning properly a test current simulates an overload or short circuit condition. Refer to Paragraph 2-1.5 for additional information.

The Digitrip 3000 Protective Relay provides five protective functions for both phase and ground protection:

- Inverse Time Overcurrent Pickup
- Inverse Time Overcurrent Time Multiplier
- Short Delay Pickup
- Short Delay Time
- Instantaneous Pickup

The ground element is capable of a residual, an external source ground or a zero sequence connection. But if ground protection is not desired, it does not have to be connected.

Each of the protective functions is independently programmed for various combinations to fit specific system requirements. For protective functions not required, the relay will allow all of the protective functions on ground and all but the inverse time overcurrent function on phase to be disabled. When the Digitrip 3000 is not set for an instantaneous trip function, a true making current release (discriminator) is available. But if it's not desired, the discriminator can be disabled.

Fig. 1-2 Digitrip 3000 Protective Relay (Rear and Side Views)

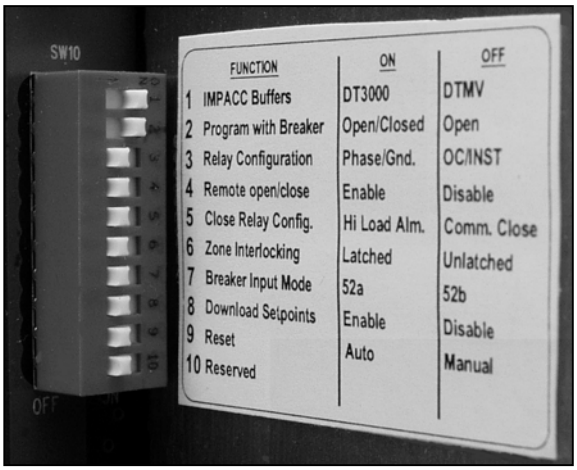

Fig. 1-3 Digitrip 3000 Protective Relay with DIP Switches Shown in Upper Left (Rear View)

By providing 11 different curve shapes the Digitrip 3000 provides greater selective coordination with almost any existing electromechanical overcurrent relay or power fuse. (Figure 1-4).

- *Thermal Curves (4 shapes)*
  - It
  - I2t
  - I4t
  - Flat
- *ANSI Curves (3 shapes per ANSI C37.112)*
  - Moderately Inverse
  - Very Inverse
  - Extremely Inverse
- *IEC Curves (4 shapes per IEC 255-3)*
  - IEC-A (Moderately Inverse)
  - IEC-B (Very Inverse)
  - IEC-C (Extremely Inverse)
  - IEC-D (Definite Time)

The ground element of Digitrip 3000 can have a curve shape independent of the phase element, providing for a more versatile ground protection.

A pictorial representation of characteristic curve shapes is provided on the face of the relay for reference purposes.

All Digitrip 3000 Protective Relays have zone selective interlocking capabilities for phase and ground fault protection. Zone selective interlocking is a means by which two or more coordinated trip devices can communicate to alter their pre-set tripping modes to provide a faster response for certain upstream fault conditions. The relay is shipped with the zone selective interlocking feature disabled by the use of the two jumpers on the rear mounted terminal strip TB1 (Figure 1-5).

Digitrip 3000 Protective Relays operating parameters and troubleshooting information are displayed on the front of the relay, via the two display windows. This is considered “ON DEVICE” information. In addition, all relay information can be transmitted to a remote location via the built-in INCOM communication system. This type of information is referred to as “COMMUNICATED INFORMATION”.

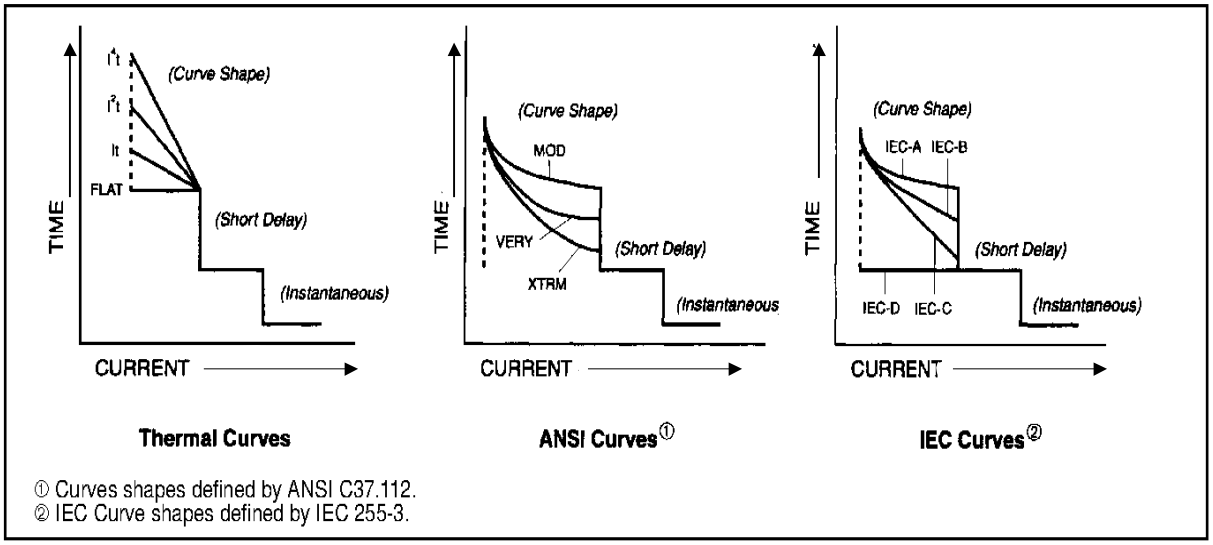

Fig. 1-4 Digitrip 3000 Curve Shape Possibilities

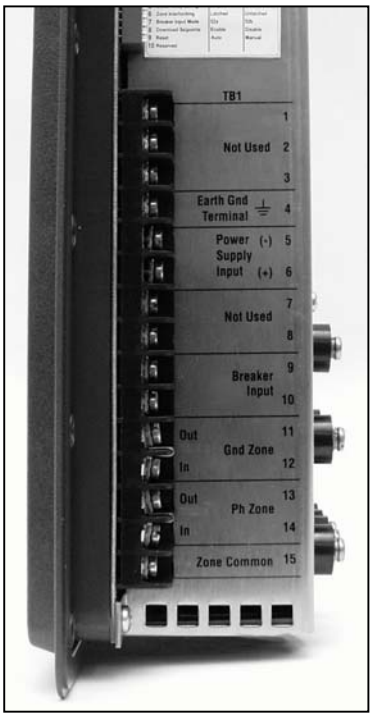

Fig. 1-5 Installed Jumpers in Place on Terminal Block TB-1 Disabling the Zone Interlocking Feature

In addition to being able to provide a circuit breaker "OPEN" or "CLOSED" status to the remote location, the Digitrip 3000 displays and remotely transmits parameters, such as:

- Individual phase currents
- Ground current
- Maximum current for each phase and ground since last reset (A Demand)
- Magnitude and phase of current causing trip
- Cause of trip
- Current transformer ratio
- Existing set point settings
- Software Version

The remote communications capability is made possible by the Cutler-Hammer Integrated Communications (INCOM) Chip and Protocol which is compatible with the Power-Net Monitor and Control System. Reliable two-way communications can be provided over a twisted pair communications network. The protocol permits a remote master computer to perform:

1) Interrogation of relay data
2) Execution of circuit breaker "Close" and "Trip" commands
3) "Reset" of the relay after a trip
4) Downloading of settings

1-4 STANDARDS

Digitrip 3000 Protective Relays are "Component Recognized" by the Underwriters Laboratory, Inc.® under UL File E154862. Refer to Section 2-3 UL Testing and Specification Summary for more information.

SECTION 2: FUNCTIONAL DESCRIPTION

2-1 PROTECTION, TESTING AND COMMUNICATION CAPABILITIES

2-1.1 RMS SENSING

Digitrip 3000 Protective Relays provide true RMS sensing for proper correlation with the thermal characteristics of conductors and equipment. The root-mean-square (rms) value is determined by a microprocessor calculation of discrete sampled points of the current waveform. This rms value is used for the protection response and metering displays of the relay.

2-1.2 PICKUP SETTING

A Digitrip 3000 Protective Relay pickup setting is a discrete, pre-selected value of current used to initiate a tripping action. The Digitrip 3000 has several current based tripping functions:

- Phase inverse time overcurrent tripping - Thermal, ANSI, and IEC Curves.
- Ground inverse time overcurrent tripping - Thermal, ANSI, and IEC Curves.
- Phase and ground short delay tripping.
- Phase and ground instantaneous tripping.

AS SHOWN IN FIGURE 3-2, THE ANSI AND IEC "CURVE SHAPES" ARE IN TERMS OF MULTIPLES OF I_{PU} (PICKUP CURRENT OF THE CT PRIMARY), WHEREAS 'SHORT DELAY' AND "INSTANTANEOUS" ARE IN TERMS OF MULTIPLES OF I_N (5A SECONDARY OF CT PRIMARY CURRENT). THE THERMAL CURVE IS REPRESENTED IN TERMS OF MULTIPLES OF I_N FOR ITS CURVE SHAPE, SHORT DELAY, AND INSTANTANEOUS SETTINGS. THIS MUST BE CONSIDERED IN THE COORDINATION STUDY AND IN THE PROGRAMMING OF THE DIGITRIP 3000 PROTECTIVE RELAY.

EXAMPLE: *THERMAL CURVES, SHORT DELAY AND INSTANTANEOUS SETTINGS USING I_N*

Ct Rating = I_n = 1200A
Pickup Setting = 1.5
Pickup (amperes) = (1 200)(1 .5)
= 1800A

Example: *ANSI and IEC curves using I_{pu}*

Ct Rating = 1200A
I_{pu} = Pickup Current = 1800A

TABLE 2.1 CURVE SELECTION

Curve Type	Settings	Result
Thermal	It	Moderately Inverse
	I^2t	Inverse
	I^4t	Extremely Inverse
	FLAT	Definite or Fixed Time
ANSI	MOD	Moderately Inverse
	VERY	Very Inverse
	XTRM	Extremely Inverse
IEC	IEC-A	Moderately inverse
	IEC-B	Very Inverse
	IEC-C	Extremely Inverse
	IEC-D	Definite Time

Ct Ratio = 1200:5 (Entered as "1200")
Actual secondary current at pickup=7.5=(1800/1200) x 5

2-1.3 TIME SETTING

A Digitrip 3000 Protective Relay time setting is a pre-selected time delay initiated when a pickup point on the long or short curve is exceeded. If the current value drops below the pickup value, the timing function resets. Memory is NOT provided. If the current value does not drop below pickup, the amount of delay before tripping occurs is a function of the current magnitude and the time setting. The delay can be determined from the appropriate time-current curves.

2-1.4 PROTECTION CURVE SETTINGS

Curve Selection: Extensive flexibility on inverse time overcurrent (phase and ground) curve shaping is possible with eleven available curve types. The selection and associated result is determined by the type of curve shape that best fits the coordination requirements (Figure 1-4, Table 2.1). Different curve shape settings can be applied to phase and ground to maximize coordination flexibility. The curves are discussed in more detail in Paragraph 3-3.1.

Note: The DT3000 displays pickup settings in the "Settings" window to three significant digits only. If there is a 4th digit in the setting, it will not be displayed in the "Settings" window.

Phase Inverse Time Overcurrent Pickup: The available pickup settings for the standard DT3000, shown below, range from 0.20 to 2.2 times (I_n).

Phase Element Inverse Time Overcurrent Pickup – Available Settings	Tolerance	Curve #
0.20, 0.25, 0.30, 0.35, 0.40, 0.45, 0.50, 0.55, 0.60, 0.65, 0.70, 0.75, 0.80, 0.85, 0.90, 0.95, 1.00, 1.10, 1.20, 1.30, 1.40, 1.50, 1.60, 1.70, 1.80, 1.90,2.00,2.10, 2.20	±5%	

The available pickup settings for the Chicago version (DT3100 and DT3101) are shown below, they range from 0.20 to 1.00 times (I_n).

Phase Element Inverse Time Overcurrent Pickup – Available Settings	Tolerance	Curve #
0.20, 0.25, 0.30, 0.35, 0.40, 0.45, 0.50, 0.55, 0.60, 0.65, 0.70, 0.75, 0.80, 0.85, 0.90, 0.95, 1.00	±5%	

Phase Inverse Time Overcurrent Time Multiplier: The available time settings, shown below, depend on the curve shape selected. For the thermal curves, the settings represent relay operating times at a current value equal to 3 times (I_n). For ANSI and IEC curves, the settings represent the relay's time multiplier for the current value equal to I/I_{pu}.

Phase Element Inverse Time Overcurrent Time Multiplier Available Settings	Tolerance	Curve #
Curve = IT, I_2T, I_4T: 0.20, 0.25, 0.30, 0.35, 0.40, 0.45, 0.50, 0.55, 0.60, 0.65, 0.70, 0.75, 0.80, 0.85, 0.90, 0.95, 1.00, 1.25, 1.50, 1.75, 2.00, 2.25, 2.50, 2.75, 3.00, 3.50, 4.00, 4.50, 5.00, 5.50, 6.00, 6.50, 7.00, 7.50, 8.00, 8.50, 9.00, 10.0, 12.5, 15.0, 17.5, 20.0, 22.5, 25.0, 27.5, 30.0, 35.0, 40.0	+10% See Notes 1 & 2	IT SC-5392-92B I^2T SC-5391-92B I^4T SC-5390-92B
Curve = FLAT: 0.20, 0.25, 0.30, 0.35, 0.40, 0.45, 0.50, 0.55, 0.60, 0.65, 0.70, 0.75, 0.80, 0.85, 0.90, 0.95, 1.00, 1.25, 1.50, 1.75, 2.00	± 0.05 seconds	FLAT SC 5393-92B
Curve = ANSI MOD, VERY, XTRM: 0.1, 0.2, 0.3, 0.4, 0.5, 0.6, 0.7, 0.8, 0.9, 1.0, 1.1, 1.2, 1.3, 1.4, 1.5, 1.6, 1.7, 1.8, 1.9, 2.0, 2.1, 2.2, 2.3, 2.4, 2.5, 2.6, 2.7, 2.8, 2.9, 3.0, 3.1, 3.2, 3.3, 3.4, 3.5, 3.6, 3.7, 3.8, 3.9, 4.0, 4.1, 4.2, 4.3, 4.4, 4.5, 4.6, 4.7, 4.8, 4.9, 5.0	±10% See Notes 1 & 2	MOD SC-6685-96 VERY SC-6686-96 XTRM SC-6687-96

Curve = IECA, IECB, IECC, IECD: 0.025, 0.050, 0.075, 0.100, 0.125, 0.150, 0.175, 0.200, 0.225, 0.250, 0.275, 0.300, 0.325, 0.350, 0.375, 0.400, 0.425, 0.450, 0.475, 0.500, 0.525, 0.550, 0.575, 0.600, 0.625, 0.650, 0.675, 0.700, 0.725, 0.750, 0.775, 0.800, 0.825, 0.850, 0.875, 0.900, 0.925, 0.950, 0.975, 1.00	±10% See Notes 1, 2 & 3	IECA SC-6688-96 IECB SC-6689-96 IECC SC-6690-96 IECD SC-6691-96

NOTES:
1. Curves go to constant operating time above 30 X In.
2. Tolerance: ± 10% or 0.09 seconds, whichever is larger (>1.5 x I_{pu}). Minimum trip time is 2 power line cycles.
3. For IECD, the Time Multiplier Tolerance is ±0.05 seconds.

Phase Short Delay Pickup: The available pickup settings, shown below, range from 1 to 11 times (I_n) or NONE. If NONE is selected, the short delay protective function is disabled.

Phase Element Short Delay Pickup Available Settings	Tolerance	Curve #
1.00, 1.25, 1.50, 1.75, 2.00, 2.25, 2.50, 2.75, 3.00, 3.50, 4.00, 4.50, 5.00, 5.50, 6.00, 6.50, 7.00, 7.50, 8.00, 8.50, 9.00, 9.50, 10.0, 11.0, NONE	± 10%	SC-5394-92B

Phase Short Delay Time: The available time settings, shown below, range from 0.05 to 1.5 seconds at currents equal to or above the short delay pickup setting selected. If NONE was selected for the Phase Short Delay Pickup Setting, the relay will bypass requesting the time setting.

Phase Element Short Delay Time (in seconds) Available Settings	Tolerance	Curve #
0.05, 0.10, 0.15, 0.20, 0.25, 0.30, 0.35, 0.40, 0.45, 0.50, 0.55, 0.60, 0.65, 0.70, 0.75, 0.80, 0.85, 0.90, 0.95,1.00,1.25, 1.50	± 0.05 seconds	SC-5394-92B

Phase Instantaneous: The available pickup settings, shown below, range from 1 to 25 times (I_n) or NONE. If NONE is selected, the instantaneous protective function is disabled and a choice of whether to turn the discriminator option on (DON) or off (DOFF) is offered. The discriminator is a true making current release. When the circuit breaker closes, the discriminator function, if selected to be on, is functional in an instantaneous trip mode for 10 cycles after the breaker closes. The breaker will trip instantaneously via the discriminator, if the fault current is above 11 times (I_n). After the 10-cycle period has passed, the discriminator will no longer be functional. It becomes functional again only when the breaker opens and then is re-closed.

Type Setting	Available Settings	Tolerance	Curve #
INSTANTANEOUS PICKUP	1.00, 1.25, 1.50, 1.75, 2.00, 2.25, 2.50, 2.75, 3.00, 3.50, 4.00, 4.50, 5.00, 5.50, 6.00, 6.50, 7.00, 7.50, 8.00, 8.50, 9.00, 9.50, 10.0, 12.5, 15.0, 17.5, 20.0, 22.5, 25.0, NONE	± 10%	SC-5396-92B
DISCRIMINATOR (IF PHASE INST SET TO NONE)	D ON Fixed At 11 x In D OFF	+10%	

Ground Fault: After the phase instantaneous setting is established, the ground curve shape, the ground inverse time overcurrent pickup, ground inverse time overcurrent time, ground short delay pickup, ground short delay time and ground instantaneous settings are selected. The available settings are shown below. Note that the ground curve settings are independent of the phase curve and are programmed separately.

Programming the ground settings is done in the same manner as the phase settings, except there is no discriminator option for ground instantaneous, and there is a NONE selection for the inverse time overcurrent pickup setting.

Ground Inverse Time Overcurrent Pickup: The available pickup settings, shown below, range from 0.20 to 2.2 times (I_n).

Ground Element Inverse Time Overcurrent Pickup – Available Settings	Tolerance	Curve #
0.100, 0.125, 0.150, 0.175, 0.200, 0.225, 0.250, 0.275, 0.300, 0.350, 0.400, 0.450, 0.500, 0.550, 0.600, 0.650, 0.700, 0.750, 0.800, 0.850, 0.900, 0.950, 1.00, 1.25, 1.50, 1.75, 2.00, NONE	+ 5%	

Ground Inverse Time Overcurrent Time Multiplier: The available time settings, shown below, depend on the ground curve shape setting selected. For the thermal curves, the settings represent relay operating times at a current value equal to 3 times (I_n). For ANSI and IEC curves, the settings represent the relay's time multiplier for the current value equal to I/I_{pu}.

Ground Element Inverse Time Overcurrent Time Multiplier Available Settings	Tolerance	Curve #
Curve = IT, I2T, I4T: 0.20, 0.25, 0.30, 0.35, 0.40, 0.45, 0.50, 0.55, 0.60, 0.65, 0.70, 0.75, 0.80, 0.85, 0.90, 0.95, 1.00, 1.25, 1.50, 1.75, 2.00, 2.25, 2.50, 2.75, 3.00, 3.50, 4.00, 4.50, 5.00, 5.50, 6.00, 6.50, 7.00, 7.50, 8.00, 8.50, 9.00, 10.0, 12.5, 15.0, 17.5, 20.0, 22.5, 25.0, 27.5, 30.0, 35.0, 40.0	±10% See Notes 1, 2 & 5	IT SC-5401-92B I2T SC-5400-92B I4T SC-5399-92B
Curve = FLAT: 0.20, 0.25, 0.30, 0.35, 0.40, 0.45, 0.50, 0.55, 0.60, 0.65, 0.70, 0.75, 0.80, 0.85, 0.90, 0.95, 1.00, 1.25, 1.50, 1.75, 2.00	±0.05 seconds	FLAT SC-5402-92B
Curve = ANSI MOD, VERY, XTRM: 0.1, 0.2, 0.3, 0.4, 0.5, 0.6, 0.7, 0.8, 0.9, 1.0, 1.1, 1.2, 1.3, 1.4, 1.5, 1.6, 1.7, 1.8, 1.9, 2.0, 2.1, 2.2, 2.3, 2.4, 2.5, 2.6, 2.7, 2.8, 2.9, 3.0, 3.1, 3.2, 3.3, 3.4, 3.5, 3.6, 3.7, 3.8, 3.9, 4.0, 4.1, 4.2, 4.3, 4.4, 4.5, 4.6, 4.7, 4.8, 4.9, 5.0	±10% See Notes 1, 2 & 4	MOD SC-6685-96 VERY SC-6686-96 XTRM SC-6687-96
Curve = IECA, IECB, IECC, IECD: 0.025, 0.050, 0.075, 0.100, 0.125, 0.150, 0.175, 0.200, 0.225, 0.250, 0.275, 0.300, 0.325, 0.350, 0.375, 0.400, 0.425, 0.450, 0.475, 0.500, 0.525, 0.550, 0.575, 0.600, 0.625, 0.650, 0.675, 0.700, 0.725, 0.750, 0.775, 0.800, 0.825, 0.850, 0.875, 0.900, 0.925, 0.950, 0.975, 1.00	±10% See Notes 1, 2, 3 & 4	IECA SC-6688-96 IECB SC-6689-96 IECC SC-6690-96 IECD SC-6691 -96

NOTES:
1. Curves go to constant operating time above 30 X In.
2. Tolerance: ± 10% or 0.09 seconds, whichever is larger (>1.5 x I_{pu}). Minimum trip time is 2 power line cycles.
3. For IECD, the Time Multiplier Tolerance is ±0.05 seconds.
4. For Ground Pickup ≤0.2pu: trip time tolerance is ±15%.

Ground Short Delay Pickup: The available pickup settings, shown below, range from 0.100 to 11 times (I_n) or NONE. If NONE is selected, the short delay protective function is disabled.

Ground Element Short Delay Pickup Available Settings	Tolerance	Curve #
0.100, 0.125, 0.150, 0.175, 0.200, 0.225, 0.250, 0.275, 0.300, 0.350, 0.400, 0.450, 0.500, 0.550, 0.600, 0.650, 0.700, 0.750, 0.800, 0.850, 0.900, 0.950, 1.00, 1.25, 1.50, 1.75, 2.00, 2.25, 2.50, 2.75, 3.00, 3.50, 4.00, 4.50, 5.00, 5.50, 6.00, 6.50, 7.00, 7.50, 8.00, 8.50, 9.00, 9.50, 10.0, 11.0, NONE	+ 10%	SC-5403-92B

Ground Short Delay Time: The available time settings, shown below, range from 0.05 to 1.5 seconds at currents equal to or above the short delay pickup setting selected. If NONE was selected for the Phase Short Delay Pickup Setting, the relay will bypass requesting the time setting.

Ground Element Short Delay Time (in seconds) Available Settings	Tolerance	Curve #
0.05, 0.10, 0.15, 0.20, 0.25, 0.30, 0.35, 0.40, 0.45, 0.50, 0.55, 0.60, 0.65, 0.70, 0.75, 0.80, 0.85, 0.90, 0.95, 1.00, 1.25, 1.50	+ 0.05 seconds	SC-5403-92B

Ground Instantaneous: The available pickup settings, shown below, range from 0.50 to 11times (I_n) or NONE. If NONE is selected, the instantaneous protective function is disabled.

Ground Element Short Delay Time (in seconds) AVAILABLE SETTINGS	Tolerance	Curve #
0.50, 0.55, 0.60, 0.65, 0.70, 0.75, 0.80, 0.85, 0.90, 0.95, 1.00, 1.25, 1.50, 1.75, 2.00, 2.25, 2.50, 2.75, 3.00, 3.50, 4.00, 4.50, 5.00, 5.50, 6.00, 6.50, 7.00, 8.00, 8.50, 9.00, 9.50, 10.0, 11.0, NONE	+ 10%	SC-5396-92B

TABLE 2.2 MISCELLANEOUS SETTINGS

TYPE SETTING	AVAILABLE SETTINGS
HIGHLOAD TIME (pickup fixed @ 0.85 X Phase Time Overcurrent Setting)	0 Sec, 5 Sec, 10 Sec, 30 Sec, 1 min, 2 min, 5 min *5 min (Chicago version)*
FREQUENCY	50 Hz, 60 Hz
PHASE CT RATIO	5,10, 25, 50, 75,100,150, 200, 250, 300, 400, 500, 600, 630, 800, 1000, 1200, 1250, 1500, 1600, 2000, 2400, 2500, 3000,3200, 4000, 5000
GROUND CT RATIO	5,10, 25, 50, 75,100,150, 200, 250, 300, 400, 500, 600, 630, 800, 1000, 1200, 1250, 1500, 1600, 2000, 2400, 2500, 3000,3200, 4000, 5000
TEST	
Phase	P1, P2, P3, P4, P5, P6, P7, P8, P9, P10, P12, P14, P16 P18, P20, P22, P25
Phase Trip	P3T, P10T, P25T
Ground	G.1, G.2, G.3, G.4, G.5, G.6, G.7, G.8, G.9, Gi, G2, G3, G4,G5, G6, G8, G10
Ground Trip	G1T, G3T, G10T

Table 2.3 Factory Set Defaults

Dip Switch Settings		
Type	**Default Setting**	
S1	ON	(Digitrip 3000 IMPACC Buffers)
S2	OFF	(Program with Breaker Open Only)
S3	OFF	(Standard Relay Configuration – OC/Instantaneous)
S4	OFF	(Enable Remote Open/Close)
S5	OFF	(Communications Close)
S6	OFF	(Zone Interlocking Unlatched)
S7	OFF	(52b Breaker Input Mode)
S8	OFF	(Disable Download Set Points)
S9	OFF	(Manual Reset)
S10	OFF	Reserved

Phase Settings	
Type	**Default Setting**
Curve Shape	It *I^2T (Chicago version)*
LDPU	1.0
LDT	5 seconds *40 seconds (Chicago version)*
SDPU	1.5 *11 (I_n) (Chicago version)*
SDT	1.0 seconds *1.5 seconds (Chicago version)*
INST	1.75 *25 (I_n) (Chicago version)*

Ground Settings	
Type	**Default Setting**
Curve Shape	It
LDPU	0.5 *2.0 (I_n) (Chicago version)*
LDT	5 seconds *40 seconds (Chicago version)*
SDPU	0.75 *11 (I_n) (Chicago version)*
SDT	1.0 seconds *1.5 seconds (Chicago version)*
INST	1.0 *11 (I_n) (Chicago version)*

Miscellaneous Settings	
Type	**Default Setting**
DISC	OFF
HILD	10 seconds
FREQ	60 Hz
CT P	500
CT G	500

High Load: The available high load time-out settings are shown in the tables above. At a current 85% or above the inverse time overcurrent phase setting value, the high load function will begin timing to the time setting selected and the High Load LED will blink. If the current drops below the 85% value, the high load timer will reset, and only start again when the 85% value is again reached. When the High Load Timer times out three coinciding events occur:

1. The "High Load" LED on the front of the relay lights continuously,
2. An alarm signal is sent over the communications network, and
3. If DipSwitch #5 is in the "On" position, the high load alarm also closes the Communications Close Relay N.O. contacts at terminals TB2-4 and 5. These events are reset when the current drops below the 85% level.

System Frequency Selection: Either 60Hz or 50Hz may be selected.

Phase and Ground Ct Ratio Selection: The available Ct ratios, shown in the above table range from 5:5 to 5000:5.

Defaults: In the unlikely event that settings are missed or entered incorrectly, the Operational LED will blink Red and the relay will display "PRGM" in the Settings Display window. This means the program settings should be re-entered and saved.

2-1.5 INTEGRAL TESTING

Digitrip 3000 Protective Relays have a front accessible, integral field testing capability. This feature introduces a selected level of internal test current to simulate an overload or short circuit. It checks proper functioning of the relay and verifies that curve settings have been set-up correctly.

The integral test function provides selectable 'Trip' and 'No Trip' test settings for both phase and ground testing. Refer to the above tables for available test settings. The 'P' used refer to a phase current test setting, while the 'G' refers to a ground current test setting. 'T' in the table means that the test will initiate a breaker trip. All settings are in per unit current values times the I_n value, which is the selected Ct rating.

CAUTION

THE TEST MODE SHOULD NOT BE USED TO TRIP LIVE CURRENT CARRYING CIRCUITS. IF A LIVE CURRENT OF GREATER THAN 0.1 TIMES THE VALUE IS FLOWING IN EITHER A PHASE OR GROUND CIRCUIT, THE TEST MODE IS AUTOMATICALLY EXITED, ACCOMPANIED BY AN ERROR MESSAGE IN THE SETTINGS/TEST TIME/TRIP CAUSE WINDOW.

2-1.6 COMMUNICATIONS

An important function of the Digitrip 3000 Protective Relay is communications and control via the Cutler-Hammer PowerNet Protocol. It allows the combining of electrical distribution and control products with personal computers into a comprehensive communications and control network.

The Digitrip 3000's communications chip permits the interrogation of relay data, remote tripping and closing of breaker, the Reset of the relay after a trip, and downloading of set points from a remote master computer. **Note: Dip Switch #5 must be in the "Off" position to initiate a "Communications Close" command.** Communications is accomplished from the relay to the master computer via a 115.2 kHz frequency carrier signal

over a shielded twisted pair of conductors. The receiving terminal is a remote mounted master computer (IBM compatible). Refer to Figure 2-1 for a typical communications wiring diagram. **Ground shielding should be provided at one place only, with the computer end being the recommended location.**

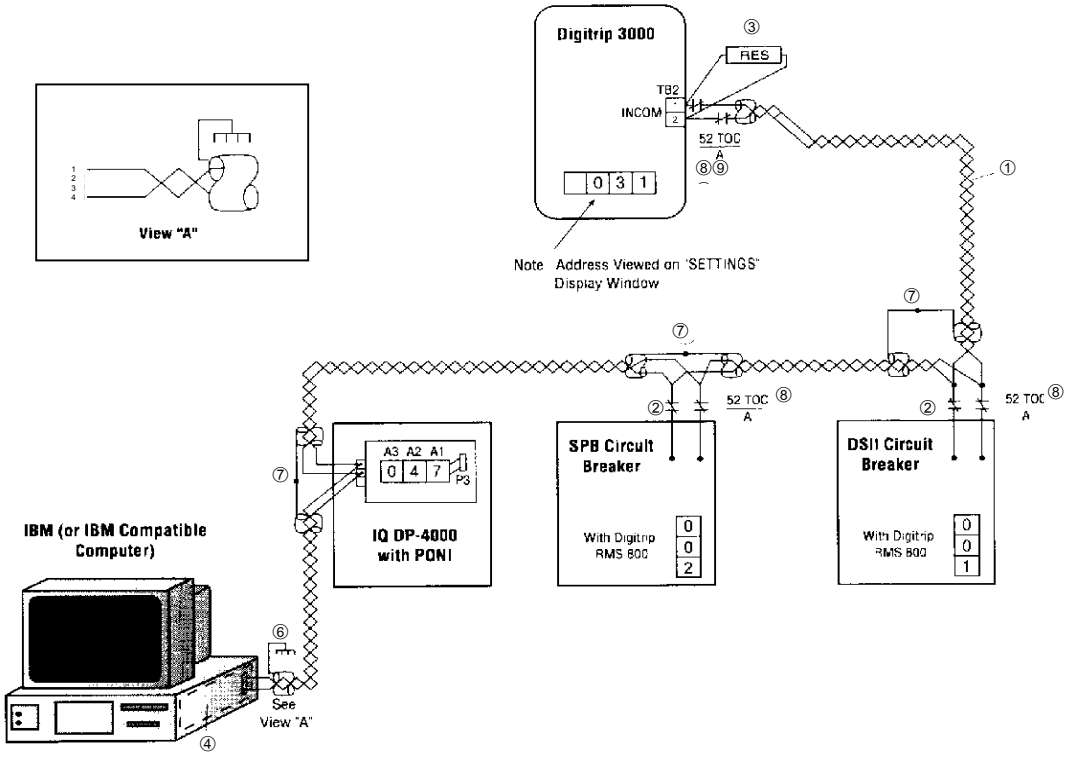

Fig. 2-1 Typical Communications Wiring Diagram

① FOR NETWORK INTERCONNECTION CABLE, SEE CABLE SPECIFICATIONS ON FIGURE 3-1.
② REFER TO CIRCUIT BREAKER WIRING DIAGRAMS FOR ACTUAL CONNECTIONS.
③ CARBON COMPOSITION RESISTOR MUST BE INSTALLED ON THE MOST REMOTE DEVICDE AS SHOWN:
- 150 OHM, ½ WATT FOR 1200 BAUD RATE COMMUNICATIONS.
- 100 OHM, ½ WATT FOR 9600 BAUD RATE COMMUNICATIONS.

④ A CUTLER-HAMMER CONI (COMPUTER OPERATED NETWORK INTERFACE) OR CONI-3 CARD MUST BE INSERTED INTO THE COMPUTER ISA BUS.
⑤ CUSTOMER TO SUPPLY A COMPUTER AND MODULAR TELEPHONE CONNECTOR TYPE RJ11 AND WIRE PER VIEW A.
⑥ GROUND SHIELDING AT ONE PLACE ONLY (COMPUTER END RECOMMENDED).
⑦ WHERE DEVICES ARE DAISY CHAINED, TIE SHIELDING TOGETHER FOR END-TO-END CONTINUITY, SOME PRODUCTS WILL PROVIDE AN EXTRA TERMINAL FOR A TIE POINT FOR THE CABLE SHIELD LEADS.
⑧ CIRCUIT BREAKER TRUCK OPERATED CELL TOC SWITCH (SHOWN FOR CIRCUIT BREAKER IN "CONNECTED" POSITION) IS OPTIONAL TO AUTOMATICALLY DISCONNECT RELAY FROM THE COMMUNICATION NETWORK WHEN CIRCUIT BREAKER IS IN THE "TEST" POSITION.
⑨ LAST DEVICE IN NETWORK, TIE BACK SHIELD AND TAPE.
⑩ WHEN TOC SWITCH IS USED, DOWNLOADING OF PROTECTION SETTINGS FROM THE COMPUTER WILL NOT BE POSSIBLE WITH BREAKER IN THE "TEST" POSITION.

2-2 PROTECTIVE RELAY HARDWARE

2-2.1 FRONT OPERATIONS PANEL

The operations panel, which is normally accessible from the outside of the switch gear panel door, provides a means to program, monitor and test the unit (Figure 1-1). For the purpose of familiarization, the panel is divided into three sub-sections:

1. Pushbuttons
2. LED's
3. Display Windows

Pushbuttons: The front operations panel supports eleven membrane pushbuttons. Pushbuttons are color coded (red, white, blue and yellow) by their function. For example, blue pushbuttons are associated with actual program functions, yellow pushbuttons with integral testing functions, and white pushbuttons are common to both operations or are independent. White pushbuttons accomplish their function when depressed. They can be held down and not released to accelerate their function. Blue and Yellow pushbuttons accomplish their function after having been pressed and released.

Reset Pushbutton (Blue)
The Reset pushbutton is used to reset any of the following: the trip relays (overcurrent and instantaneous), the trip alarm relay, the trip LED's, and the ampere demand current. Reset applies to both normal operations and integral testing. If the unit is in the auto-reset mode, as set by DIP switch #9 on the back of the unit, the trip relays and the trip alarm relay will automatically reset when the circuit breaker is opened after a trip.

Program Mode Pushbutton (Blue)
The Program Mode pushbutton, which is accessed by opening, hinged access cover, is used to enter and exit the program mode. When this pushbutton is pressed and released, the program LED flashes and set points can be altered.

DIP Switch S2 establishes when the Program Mode can be entered. With S2 set to "off," the Program Mode can only be entered when the breaker is open. With S2 set to "on," the Program Mode can be entered with the breaker open or closed.

Selections made in the program mode are only saved when the Save Settings pushbutton, which is described later, is depressed. When programming is concluded, the Program Mode pushbutton should be pressed to exit the program mode. Note that if the Save Settings pushbutton is not depressed prior to exiting the program mode, the previous settings will be retained. The program mode is also exited if the Reset pushbutton is pressed or if there is no programming activity for approximately 2-1/2 minutes.

Note: Each Digitrip 3000 is shipped from the factory with nominal protection settings. The user should program the relay before putting it into service, as these nominal values may not give optimum system protection or coordination.

Test Mode Pushbutton (Yellow)
Also located behind the sealed hinged access cover is the Test Mode pushbutton. This pushbutton is used to enter and exit the test mode. When the pushbutton is pressed and released, the word TEST will appear in the Settings/Test Time/Trip Cause display window. If there is more than 0.1 times (I_n) current flowing in either the phase or the ground circuit, the Test Mode cannot be initiated and the error message "ERR" will appear in the display window. The test mode will automatically exit if there is no activity for approximately 2-1/2 minutes.

Select Test Pushbutton (Yellow)
The Select Test pushbutton is used, after the test mode has been entered, to select the type of test. There are phase and ground tests to trip or not trip the breaker (See Section 3-3.4).

Test Pushbutton (Yellow)
The selected test operation is initiated by pressing and releasing the Test pushbutton.

Select Settings Pushbutton (Blue)
In the program mode, the Select Settings pushbutton is used to step to the next set point. This pushbutton steps forward. To step back, the Select Settings pushbutton can be pressed and held, while pressing and releasing the Lower pushbutton.

Raise/Lower Pushbutton (White)
The Raise and Lower pushbuttons are used during the program and test modes to increase or decrease the value of the displayed set point.

Save Settings Pushbutton (Blue)
While in the program mode, selected Set Points can be saved by pressing and releasing the Save Settings pushbutton. Settings can be saved individually or as a group. If the Save Settings pushbutton is not used, the previous Set Points will remain when the program mode is exited.

View Settings Pushbutton (Blue)
The View Settings pushbutton is only functional when the unit is in the normal operating mode. It displays the unit's set point including the phase and ground current transformer ratio selected via programming. The software version of the DT3000 will be displayed after the ground Ct ratio setting, and will appear in the rms Amperes display window with the letters "SVER".

Select Pushbutton (White)
The Select pushbutton is used to step between any of the eight current values that are displayed in the rms ampere window. The eight currents are IA, IB, IC, IG, IA ampere demand, IB ampere demand, IC ampere demand, and IG ampere demand. The currents displayed are the present rms values. The ampere demand currents are the averaged RMS values sensed over a 5-minute period of

time. The demand value is the largest 5-minute average measured since the ampere demand was last reset.

LED: LED's are used to indicate a number of functions, operations and/or warnings. Many of the LED's provide different indication messages. The color and a constant on or blinking operation determines the specific message. Several of the LED's are bi-colored and can be lit green or red.

Operational LED
The Operational LED at the top of the relay should be green and blink on for approximately one second and then off for one second. This indicates that the relay is functioning properly in its normal operation mode. If this LED is blinking red, it indicates the relay may need reprogramming. If this LED is lit in any color shade other than a definite green or red, or if it is not blinking at all, an internal problem has been detected requiring replacement of the relay.

High Load LED
The High Load LED will blink green when high load settings are being selected in the program mode. The High Load LED will blink red (in operational or test modes) when a load current reaches 85% or reaches above the inverse time overcurrent phase pick-up setting. If the load current remains at 85% or remains above the inverse time overcurrent phase pickup setting for the time interval setting, the LED will change to steady red at the end of the time interval. Whenever the load current drops below the 85% level, the timer will reset and the LED will turn off.

Communication Trip LED
This LED will be a constant red when the master computer has tripped the breaker via INCOM. The LED will turn off when the Reset pushbutton is pressed or the circuit breaker is re-closed.

Curve Shape LED
This LED will blink green when the slope set point is displayed in the Settings/Test Time/Trip Cause window while in the program mode. When the curve shape set point is being viewed in the unit's normal operating mode, this LED will be a continuous green.

Time Overcurrent Setting LED
This LED is bi-colored. While in the program mode, the LED will blink green when the inverse time overcurrent pickup set point is displayed in the Settings/Test Time/Trip Cause window. It will be a constant green when the inverse time overcurrent pickup set point is being viewed in the unit's normal operating mode. The LED will blink red whenever the load current exceeds the inverse time overcurrent pickup set point. If the relay trips on inverse time overcurrent, the LED will be continuous red.

Inverse Time Overcurrent Time LED
This LED will blink green, while in the program mode, when the LED time overcurrent time set point is displayed in the Settings/Test Time/Trip Cause window. When the time multiplier is being viewed in the unit's normal operating mode, the LED is a constant green.

Short Delay Setting LED
This LED is bi-colored and operates like the time overcurrent setting LED.

Short Delay Time LED
The short delay time LED, when lit is green, and operates like the inverse time overcurrent time LED.

Instantaneous LED
This LED is bi-colored and operates like the inverse time overcurrent setting LED.

Phase LED
The phase LED is bi-colored. The LED will blink green when the phase inverse time overcurrent setting, inverse time multiplier, short delay setting, short delay time, and instantaneous Set Points are displayed in the Settings/Test Time/Trip Cause window while in the program mode. When these Set Points are viewed in the normal operating mode, this LED will be a constant green. The LED will blink red, along with the time overcurrent setting LED, when the phase load current exceeds the inverse time overcurrent pickup set point. The LED will be a constant red, when the phase inverse time overcurrent initiates a trip, a short delay, or instantaneous protective functions.

Ground LED
The ground LED is also bi-colored and operates exactly like the phase LED for all functions associated to ground.

Ampere Demand LED
This LED will be a constant green when an ampere demand current is being viewed in the rms ampere window.

I_A, I_B, I_C, I_G LED's
The specific phase or ground current LED's will be a constant green when that phase or ground current is being displayed in the rms ampere window. When the Ampere Demand LED is also lit, the displayed current is the Ampere Demand Current.

Program LED
This LED is a constant green when the relay is in the program mode.

Test LED
This LED is a constant green when the relay is in the test mode.

Display Windows: Two windows are used to display the relay's data, Set Points and messages. One window is located in the upper portion of the relay's faceplate and is labeled RMS Amperes. A second window is located in the lower portion of the faceplate adjacent to the program and test LED's. It is labeled Settings/Test Time/Trip Cause.

RMS Amperes Window
This window has a five digit numeric display and shows:

1. The present phase or ground currents.
2. The largest phase or ground demand currents since last reset.
3. The fault current (displayed after a trip until a reset action is initiated).
4. The phase and ground current transformer Ct setting (when "View Settings" pushbutton is used with the relay in the normal operating mode).

Settings/Test Time/Trip Cause Window
This window is a four character alphanumeric display used to show the value of the Set Points, the test time and the cause of trip.

2-2.2 REAR ACCESS PANEL

WARNING

THE BACK OF DIGITRIP 3000, WHEN ENERGIZED, OFFERS EXPOSURE TO LIVE PARTS WHERE THE HAZARD OF A FATAL ELECTRIC SHOCK IS PRESENT. ALWAYS DISCONNECT SOURCE AND CONTROL POWER SUPPLY BEFORE TOUCHING ANYTHING ON THE REAR OF THE DIGITRIP 3000. FAILURE TO DO SO COULD RESULT IN INJURY OR DEATH.

The rear access panel of Digitrip 3000 is normally accessible from the rear of an open panel door. All wiring connections to the Digitrip 3000 Protective Relay are made at the chassis' rear. For the sake of uniform identification, the frame of reference used when discussing the rear access panel is facing the back of the relay. The DIP switches, for example, are located on the upper left of the rear panel (Figure 1-3). Become familiar with the functions and connections involved, especially the following:

DIP Switches: A set of ten DIP switches is located in the upper left portion of the rear panel. Refer to Table 5.1 for DIP switch positions. Their basic functions are as follows:

- Switch S1 is used to select whether the IMPACC buffers are set for the Digitrip 3000 configuration or the Digitrip MV configuration. (Refer to Section 5: for configuring the Digitrip 3000 as a replacement for a Digitrip MV.)
- Switch S2 is used to enable/disable the ability to program the Set Points when the breaker is in the open or closed position. CARE MUST BE TAKEN WHEN PROGRAMMING THE DIGITRIP 3000 WHILE THE BREAKER IS CLOSED AND CURRENT IS FLOWING. AN INCORRECT SETTING CONFIGURATION COULD CAUSE THE RELAY TO TRIP THE BREAKER WHEN SETTINGS ARE SAVED.
- Switch S3 is used to configure the trip contacts as shown below:

Trip Contacts	Dip Switch OFF Position	Dip Switch ON Position
TB 12 & 13	Phase & Ground Trip Inst.	Ground Trip Inst./OC
TB 14 & 15	Phase & Ground Trip OC/Communications	Phase Trip Inst./OC/ Communications

- Switch S4 is used to enable/disable the ability to open or close the breaker remotely from the communications interface (host computer).
- Switch S5 is used to configure the Communication Close output relay at terminals TB2-4 & TB2-5. When S5 is in the "On" position the output relay is programmed for High Load Alarm. When S5 is in the "Off" position the output relay is programmed for Communications Close.
- Switch S6 is used to configure the zone interlock input. When the "Zone Input" switch S6 is in the "On" position, the zone interlock input is latched for compatibility with low voltage trip units as in the existing DT3000. The latched Zone Interlock option will not execute a Zone Interlock Fast Trip until the downstream relay stops sending the zone interlock signal and the current drops below the pickup level settings. When switch S6 is in the "Off" position, the zone interlock input is unlatched for faster tripping. The unlatched Zone Interlock option executes Zone Interlock Fast Trip when the downstream relay stops sending the zone interlock signal. Use the latched option for co-ordination with self-powered trip units. Self-powered trip units stop sending the zone interlock signal when the trip signal is issued. Latching of the DT-3000 zone interlock input provides the needed co-ordination time for the downstream breaker to open.
- Switch S7 is used to select between a 52a and a 52b input to determine breaker state. When S7 is in the "On" position, the breaker status is based on the 52a input. When S7 is in the "Off" position, the breaker status is based on the 52b input. The OFF/52b configuration is the default mode. The breaker state determination is used for the following purposes in the DT3000:

  1. Test the number of cycles the breaker has been closed for Discriminator operation.
  2. Determine the breaker state for setting change permission if S2 is set to "Program with Breaker Open Only".
  3. Report breaker state to PowerNet.

  The 52b contact is open when the breaker is closed and closed when the breaker is open. The 52a contact is closed when the circuit breaker is closed and open when the breaker is opened or racked out. The 52a option has the benefit of properly reporting breaker state when the circuit breaker is racked out.

- Switch S8 is used to enable/disable the ability to download Set Points from the communication interface (host computer).

- Switch S9 is used to select whether the relay should be self-reset or manually reset (lock out function). For additional information please refer to the "Manual Reset" and "Auto Reset' sections.

  In the manual reset mode the Trip Instantaneous contact (TB2 12 and 13), Trip Overcurrent contact (TB2 14 and 15) and the Trip Alarm contact (TB2 6, 7 and 8) change state after a protection trip operation. The contacts stay in that state until the "Reset" Pushbutton is pressed. In addition, the front panel will hold the cause of trip in the "Trip Cause" window and the fault current magnitude in the "RMS Ampere" window. A RESET COMMAND can be sent to the Digitrip 3000 by a master computer to remotely reset the Digitrip 3000.

  In the auto reset mode the Trip Instantaneous contacts (TB2 12 and 13), or Trip Overcurrent contacts (TB2 14 and 15) are momentarily closed after a protection trip operation. The contacts will remain closed until the current drops below 0.5 A. The Trip Alarm Relay, however, remains energized until the "Reset" Pushbutton is depressed or a RESET COMMAND is received from a communication system master. In this mode after a trip is initiated and the current is removed, the display will BLINK the cause of the trip in the "Trip Cause" window and the "RMS Ampere" window will show the fault current magnitude. Both displays clear when current is reapplied.

- Switch S10 is reserved.

Inverse Time Overcurrent Reset: The inverse-time overcurrent function in the DT3000 requires the measured current to be below pickup for 4 cycles before the trip accumulator is reset. The multi-cycle reset counter eliminates concern that the integration will reset during an arcing fault and slow down tripping.

Communicating LED: A red LED just above terminal block (TB2) is used when the relay is communicating. If the relay is the type designed to accept field installation of a communication module at a later date, this LED is not functional at any time.

Terminal Block One (TB1): TB1 is located on the left side of the rear panel, and is numbered 1 through 15, with 1, 2, 3, 7 and 8 not used. Terminals 5 and 6 are provided for the AC or DC input control power connections. Terminal 4 is the connection for equipment ground. Terminal 9 and 10 provide for connection to a required dry 52b contact and to a 52 TOC contact from the circuit breaker. **When the relay has input control power, Terminals 9 and 10 will have this potential on them.**

Terminals 11 and 12 are used for ground zone interlocking, inverse time overcurrent protection and short delay protection. The zone interlocking function is a low level dc signal used to coordinate with "downstream" and "upstream" breakers that see or do not see the fault. If the function is not used but an inverse time overcurrent or short delay time is desired, the two terminals should stay jumpered as they were when shipped from the factory.

Terminals 13 and 14 are used for phase zone interlocking, inverse time overcurrent protection and short delay protection.

Terminal 15 is the zone signal common. **Zone common should never be connected to earth ground.** Refer to Figure 4-1 for a typical phase zone interlocking / wiring scheme.

NOTE: DIGITRIP 3000 PROTECTIVE RELAYS ARE SHIPPED WITH A PHASE ZONE INTERLOCKING JUMPER (ACROSS TERMINALS TB 1-13 AND 14) AND A GROUND ZONE INTERLOCKING JUMPER (ACROSS TERMINALS TB 1-11 AND 12). FOR PHASE OR GROUND ZONE CAPABILITY, THE RESPECTIVE JUMPERS MUST BE REMOVED.

Terminal Block Two (TB2): TB2 is located on the right side of the rear panel and is numbered 1 through 15.

Terminals 1 and 2 are used for the internal INCOM communications interface.

Terminal 3 is used to reference the INCOM cable shield. It is capacitively tied to ground for high frequency noise immunity purposes.

Terminals 4 and 5 are a N.O. contact from the Communications Close output relay that can be configured two different ways:

1. When Dip Switch S5 is in the "On" position, this output relay is programmed to close when the High Load timer times out.
2. When Dip Switch S5 is in the "Off" position the Communications Close Relay can be energized via a specific communications message sent over the INCOM port.

Terminals 6, 7 and 8 are Form "C" contacts on the trip alarm relay and change state whenever any protective trip is initiated by the relay. They do not change state when the master computer initiates an opening of the circuit breaker via the communication interface. After a protective trip, the contacts remain in the changed state until the "Reset" Pushbutton is pressed, whether the relay is in Manual Reset Mode or Auto Reset Mode.

Terminals 9,10 and 11 are Form "C" contacts on the protection off alarm relay. The contacts change state when nominal control power is applied to the relay and no internal errors are detected.

Terminals 12 and 13 are a “NO” configurable contact. DIP Switch S3 is used to configure the trip contacts. With DIP Switch S3 in the “**OFF**” position, this contact closes when the relay detects a need for the circuit breaker to trip due to either a phase or ground instantaneous fault or the discriminator function. With DIP Switch S3 in the “**ON**” position, this contact closes when the relay detects a need for the circuit breaker to trip due to any type of ground fault.

Terminals 14 and 15 are also a “NO” configurable contact. With DIP Switch S3 in the “**OFF**” position, this contact closes when the relay detects a need for the circuit breaker to trip due to an inverse time overcurrent or short time function. The contact also operates when the communication interface initiates an action to open the circuit breaker. With DIP Switch S3 in the “**ON**” position, this contact closes when the relay detects a need for the circuit breaker to trip due to any type of phase fault or communications.

Rear Surface Terminals: The rear surface terminals, identified as (A1, A2), (B1, B2), (C1, C2) and (G1, G2) provide the current transformer input connection points and are rated for 5 ampere inputs. (A1, A2), (B1, B2) and (C1, C2) are phase A, B, C current inputs respectively, while (G1, G2) is the ground current input.

2-2.3 EXTERNAL HARDWARE

The Digitrip 3000 Protective Relay requires that a customer supplied source of input control power be wired into the TB1 terminal block located on the rear panel. Refer to the typical wiring diagram in Figure 3-1. A power supply can be either ac or dc voltage within the acceptable voltage ranges outlined in “UL Testing and Specification Summary.”

2-3 DT3000 AND DT3030 SPECIFICATIONS AND TEST SUMMARY

COMPLIANCE TESTING:

Certifications:

- CUL/UL Recognized, File # E154862
- CAN/CSA C22.2 No. 14-M91 Industrial Control Equipment
- UL 1053 (6th Edition 1999)
- ANSI C37.90 (1989)
- EN 61010-1 (1993) - DT303X Models Only
- EN 55011 (1991)
- CE Compliant - DT303X Models Only

Emission Tests:

- EN 55011 (1991) - Group 1 Class A
- FCC 47 CFR Chapter 1 - Part 15 Subpart b Class A

Immunity Tests:

- ANSI C37.90.1 (1989) – Surge Withstand Capability 2.5KV OSWC, 4KV FTSWC
- ANSI C37.90.2 (1995) – RF Radiated Withstand Capability to 35V/M – all models
- EN61000-4-2 (1995) – ESD Immunity to 8KV
- IEC 255-22-2 (1989) - ESD Immunity to 8KV
- EN61000-4-3 (1995) – RF radiated Immunity to 10V/M
- IEC 255-22-3 (1989) - RF radiated Immunity to 10V/M
- EN61000-4-4 (1995) - Electrical Fast Transient Immunity to 10V/M
- IEC 255-22-4 (1989) - Electrical Fast Transient Immunity to 10V/M
- EN61000-4-5 (1995) – Surge Immunity 2/1KV C/DM
- EN61000-4-6 (1996) – RF conducted Immunity to 10Vo
- EN61000-4-11 (1994) – Voltage Dip. Short Int., Variations Immunity

OUTPUT TRIP CONTACTS:
(Trip OC/Comm, Trip Inst, & Comm Close)

- Momentary:
  Make 30A ac/dc for 0.25 sec
  Break 0.25A @ 250Vdc
  Break 5A @ 120/240Vac
- Continuous:
  5A @ 120/240Vac
  5A @ 30Vdc
- Meets ANSI C37.90, paragraph 6.7

CONTROL POWER:

- Input Voltage:

	Nominal	Oper. Range
DT3000:	48 to 250Vdc 120 to 240Vac (50/60Hz)	28 to 280Vdc 66 to 264Vac (50/60Hz)
DT3030:	24 to 48 Vdc	19 to 56Vdc

- Power Consumption:

DT3000

48 Vdc 10VA	125 Vdc 10VA	250 Vdc 10VA	120 Vac 10VA	240 Vac 18VA

DT3100

48 Vdc 10W	125 Vdc 17W	250 Vdc 18W	120 Vac 18W	240 Vac 25VA

DT3030 10VA maximum

CURRENT INPUTS:

- Ct:
  5A Secondary
- Ct Burden:
  <0.004 ohm
  <0.1 VA @ Rated Current (5A)
  5A (Secondary or Ct (Primary)
- Saturation:
  28 x I_n
  30 x I_n (Chicago version)
- Momentary:
  100 x I_n for 1 Second
- Ct Thermal Rating:
  10A continuous
  500A for 1 Second

PHASE AND GROUND TIME-CURRENT CURVES:

- Thermal:
  It [Moderately Inverse]
  I^2t [Very Inverse]
  I^4t [Extremely Inverse]
  Flat [Definite Time]
- ANSI:
  (Per ANSI C37.112,1996)
  Moderately Inverse
  Very Inverse
  Extremely Inverse
- IEC:
  (Per IEC 255-3, 1989)
  IEC-A [Moderately Inverse]
  IEC-B [Very Inverse]
  IEC-C [Extremely Inverse]
  IEC-D [Definite Time]

CT (PRIMARY) SETTING AVAILABLE:

Phase & Ground
10/25/50/75/100/150/200/250/300/400/500/600/630/800/1000/1200/1250/1500/1600/2000/2400/2500/3000/3200/4000/5000

Phase & Ground (Chicago version)
5/10/25/50/75/100/150/200/300/400/500/600/630/800/1000/1200/1250/1500/1600/2000/2400/2500/3000/3200/4000/5000

PHASE OVERCURRENT PICKUP RANGES:

- Inverse Time Overcurrent Setting:
  (0.2 to 2.2) x I_n [29 settings]
  (0.2 to 1.00) x I_n [16 settings] (Chicago version)
- Short Delay Setting:
  (1 to 11) x I_n, None [25 settings]
- Instantaneous Setting:
  (1 x 25) x I_n, None [30 settings]

TIMING ACCURACY:

- Inverse Time Overcurrent Time:
  ±10% @ >1.5 x Pickup
- Short Delay Time:
  ±50ms

GROUND OVERCURRENT PICKUP RANGES:

- Inverse Time Overcurrent Setting:
  (0.1 to 2.0) in I_n [26 settings]
- Short Delay Setting:
  (0.1 to 11) x I_n, None [45 settings]
- Instantaneous Setting:
  (0.5 to 11) x I_n, None [33 settings]

2-3 DT3000 AND DT3030 SPECIFICATIONS AND TEST SUMMARY (CONTINUED)

TIME DELAY SETTINGS: • Inverse Time Overcurrent Time Multiplier: It, I^2t, I^4t Curve: 0.2 to 40 [48 settings] It, I^2t, I^4t Curve: 0.2 to 40 [47 settings] (Chicago version) Flat: 0.2 to 2.0 [21 settings] ANSI (all): 0.1 to 5.0 [50 settings] IEC (all): 0.025 to 1.00 [40 settings] IEC (all): 0.05 to 1.00 [20 settings] (Chicago version) • Short Delay Time: 0.05 to 1.5 sec. [22 settings]	**ENVIRONMENT:** • Environment: Indoor Use Only, Pollution Degree II, Altitude 2,500m, Installation Category II • Mounting Location: Device should be positioned near the main disconnect • Operating temperature: -30 to +55 Degrees Celsius • Operating Humidity: 0 to 95% Relative Humidity [Non-Condensing] • Storage Temperature: -40 to +70 Degrees Celsius
AUXILIARY RELAYS: **(Protection Off Alarm and Trip Alarm)** • Make/Break: 5A @ 120/240Vac & 30Vdc 5A @ 120/240 Vac (Chicago version) • Continuous: 5A @ 120/240Vac 5A @ 30Vdc 5A Continuous (Chicago version)	**ADDITIONAL TESTS:** • Dielectric Strength: Current Inputs: 3,000Vac for 1 minute Phase to Phase • Seismic Test: Meets requirements for UBC and California Building Code Zone 4 ZPA = 3.5
COMMUNICATIONS: • PowerNet Compatible / Built-in INCOM • Data Rate is 1200 or 9600 Baud • Set INCOM address from front panel	**ZONE SELECTIVE INTERLOCKS:** • Phase: Inverse Time Overcurrent and Short Delay • Ground: Inverse Time Overcurrent and Short Delay
CURRENT MONITORING: • True rms Sensing: 3-Phase and Ground • Display Accuracy: ±1% of Full Scale [I_n] from 0.04 x I_n to 1 x I_n ±2% of Full Scale [I_n] from 1 x I_n to 2 x I_n • Amperes Demand: Average Demand over 5 Minute Sampling Window • High Load: 85% of Inverse Time Overcurrent Setting	

Notes: 1. For Ground Pickup < 0.2pu; Time Tolerance ± 15%.

SECTION 3: OPERATION

3-1 INTRODUCTION

This section specifically describes the operation and functional use of the Digitrip 3000 Protective Relay. It does not address in detail rear power connections and DIP switch settings. These topics are covered in SECTION 5 entitled "INSTALLATION, STARTUP AND TESTING." It would be helpful; however, to become familiar with the relay's wiring diagram before proceeding with the rest of this section (Figure 3-1).

3-2 POWER-UP AND SELF TESTING

When the proper ac or dc control voltage is applied to power supply input terminals, the unit will initiate a "Power On Reset" to its chip circuitry. This causes the unit's firmware to perform some self-testing and initialization of its ROM, RAM and E2 (non-volatile) memory. If any problem exists, a diagnostic message will be displayed in the Settings/Test Time/Trip Cause Window. A complete list of messages and their meanings are listed in Table 3.2. Additionally, if a problem does exist, the "Operational LED" will light red and the "Protection Off Alarm" relay will not energize. When all self checks are good, the "Protection Off Alarm" relay will energize, and the "Operational LED" will blink green.

3-3 PANEL OPERATIONS

Begin by reviewing the material presented in SECTION 2 entitled "FUNCTIONAL DESCRIPTION." Since basic definitions and explanations were given in SECTION 2, no further explanation as to function will be offered in this section. It is assumed that the operator is now familiar with Digitrip 3000 terms, available settings and overall capabilities.

3-3.1 CHARACTERISTIC CURVE

Digitrip 3000 Protective Relays provide circuit breakers with an extensive degree of selective coordination potential and permit curve shaping over a wide range. Available pickup settings, inverse time overcurrent time multiplier settings and inverse time overcurrent (phase and ground) curve selections are addressed here with respect to their effect on the resultant characteristic curve.

In general, there are three different families of curves to choose from as shown in Table 3.1. The operating characteristics of the relay are graphically represented by time-current characteristic curves shown in Figure 3-2.

TABLE 3.1 DIGITRIP 3000 CURVE SHAPES

Thermal Curves	ANSI Curves (per ANSI C37.112)	IEC Curves (per IEC 255-3)
It	Moderately Inverse	IEC-A
I_2t	Very Inverse	IEC-B
I_4t	Extremely Inverse	IEC-C
FLAT		IEC-D

As shown in Figure 3-1, the ANSI and IEC "Curve Shapes" are in terms of multiples of (Pickup Current of the Ct Primary), whereas 'short delay" and "instantaneous" are in terms of multiples of I_n (5A secondary of Ct primary current). The thermal curve is represented in terms of multiples of I_n for its curve shape, short delay, and instantaneous settings. This must be considered in the coordination study and in the programming of the Digitrip 3000 Protective Relay.

ANSI C37.I 12 defines the ANSI curves and IEC curves are defined by IEC 255-3. These curve shapes combine with the customized capability of the short delay and instantaneous functions to allow for very versatile coordinated protection schemes. The user can also customize the thermal curve shape to any desired type of coordinated protection scheme.

These curves show how and when a particular relay will act for given values of time and current. Because the DT3000 is very versatile the easier it is to accomplish close coordination and achieve optimum protection. The makeup of a typical curve is presented for clarification purposes.

For the sake of simplification, the curve discussion will center on a single line curve. Keep in mind, however, that a characteristic curve in reality is represented by a band of minimum and maximum values, not a line (Figure 3-1). Minimum and maximum values are generally the result of tolerances introduced by the manufacturing process for components and the relay's accuracy. Any expected value of tripping current or time could be the nominal value anticipated within the plus or minus tolerance. The tolerances just mentioned are usually stated in terms of the relay's accuracy and frequently highlighted on the actual working curves. Accuracy is stated in terms of a plus or minus percentage and represents a permitted fluctuation on either side of the nominal tripping point for a family of relays, like the Digitrip 3000.

The ability to adjust the relay and the continuous current of the Digitrip 3000 Protective Relay are two factors that contribute significantly to the great flexibility.

a) **Adjustable:** The ability to adjust the relay permits movement of its characteristic curve or parts of the curve. This movement can be done in both a horizontal and vertical direction on the time current grid. The actual shape of the curve can be changed along with the curve movement. This ability permits distinct curves to be established that will better match the electrical protection to the application need (Figures 3-3 through 3-9) Notice that there is no horizontal movement of the ANSI and IEC curve shapes. Only the point at which the relay starts to time out moves along the curve shape.

b) **Nominal Continuous Current:** The Digitrip 3000's nominal continuous primary current (I_n) is established by the ratio of the selected current transformers. The current transformer ratio must be set via the initial programming of the relay. These settings must agree with the circuit current transformers to which the relay is connected. Therefore, I_n is established by the current transformer ratio used and becomes the primary scale factor for the trip functions and readouts.

Before proceeding with the curve explanation, it should be noted that combining functional capabilities, such as inverse time overcurrent, short delay and instantaneous, is a coordination activity. The effects of one set of settings on another setting should always be evaluated to determine if the results under all possible circumstances are acceptable. This helps to avoid unexpected operations or non-operations in the future. Such possibilities are highlighted at the end of this discussion as a reminder when establishing relay characteristic parameters.

Inverse Time Overcurrent Protection

Inverse time overcurrent protection consists of a curve shape pickup setting and an inverse time multiplier setting. The inverse time overcurrent function offers eleven possible curve shape types as previously described (Figure 3-2 and Table 3.1). When programming the relay, this will be the first choice to make. The curve shape and its effect on the characteristic curve will be covered with the time multiplier explanations.

The pickup setting establishes the current level pickup at which the relay's inverse time overcurrent tripping function begins timing. If, after a predetermined amount of time, the current condition that started the timing process still exists, the relay's trip relay is energized. Pickup settings can be adjusted from 0.20 to 2.20 times I_n for the standard DT3000. *The Pickup settings for the Chicago version (DT3100 and DT3101) can be adjusted from 0.20 to 1.00 times I_n.* Refer to Tables 2.2 and 2.3 for a complete list of available settings. Figure 3-4 graphically illustrates how the Inverse Time Overcurrent Pickup portion of the overall curve can be moved horizontally on the time current grid by means of the pick-up settings. The Inverse Time Overcurrent Pickup is represented by the dotted lines, while a solid line represents the rest of the curve.

The Time Multiplier setting is used to select a predetermined amount of time a sustained overload condition will be carried before the breaker trips. For the Thermal Curves, a value of (3 x I_n) is the reference point where the programmed time multiplier setting is fixed on the curve. Wide ranges of time settings are available and depend upon the curve shape selection. As Time Multiplier settings are varied, the Time Multiplier portion of the overall curve is moved vertically up or down on the time current grid. This movement is also independent of the

other portions of the curve. Figure 3-4 graphically illustrates the vertical time line movement with an I^2t curve shape selection. Similar movement occurs for the remaining curve shapes.

Short Time Protection

Short time (fault) protection responds to short circuit conditions. Similar to the inverse time overcurrent function, the short time function is comprised of a short time current pickup setting and a short delay time setting. The Short Delay pickup setting establishes the current level at which the relay's short time tripping function begins timing. The Short Delay Time setting establishes the amount of time a short-circuit will be carried before the protective relay's trip relay is energized. As is the case with inverse time overcurrent protection, short delay protection also offers a range of settings for both pickup and time. Refer to Tables 2.2 and 2.3 for available selections.

Two points should be made concerning the available selections:

- If "NONE" is selected, the Short Delay function is disabled and there will be no Short Delay protection. Also, if "NONE" is selected, a Short Delay Time selection is not offered.
- There is no curve shape selection for the Short Delay Time portion of the curve. A flat response curve is automatic.

When a short delay pickup setting other than "NONE" is selected, the Short Delay pickup and the Short Delay Time portions of the overall curve are moved horizontally and vertically in a similar manner to the inverse time protection functions. Refer to Figures 3-5 and 3-6 for graphic illustrations of this movement.

Note that the scope of protection offered by the Digitrip 3000 is a coordinated effort. This is especially true when a number of protective functions, such as inverse time overcurrent and short delay protection are combined into one cooperative curve. Figure 3-8 shows a typical time-current curve that has both inverse time overcurrent and short delay protection, and an I_2t curve shape selected. Because of the pickup, time and curve shape selections made for this illustration, a triangle (shaded area on the illustration) is formed by the intersection of the different time and pickup lines. Internally, the Digitrip 3000 design looks at this particular curve as if the shaded triangular area does not exist. Therefore, in an actual performance situation, the short delay time function would take precedence over that portion of the inverse time overcurrent line forming the one leg of the triangle.

This does not create a problem from a protection or coordination standpoint. In fact, it is recommended on certain applications to set the minimum time the Digitrip 3000 Protective Relay can respond and where it will intersect the inverse time overcurrent curve. If only the Short Delay Time is required, it is recommended that the Short Delay setting be set at 11 times (I_n). It could, however, cause confusion if the combination of protection functions is not viewed as a coordinated activity. For example, an individual might expect a tripping action based on a selected low value for Inverse Time Overcurrent Time Multiplier. The expected tripping action will not take place at the expected time, if the Short Delay Time selected is in the higher end of time selection possibilities. It should also be noted that this situation is similar for other curve selections. The only thing that changes with different curve selections is the general shape of the triangle. When the Short Delay Time setting is low enough, this situation will not exist. In summary, for an inverse time and short time cooperative curve, the minimum trip time cannot be less than the short delay time setting.

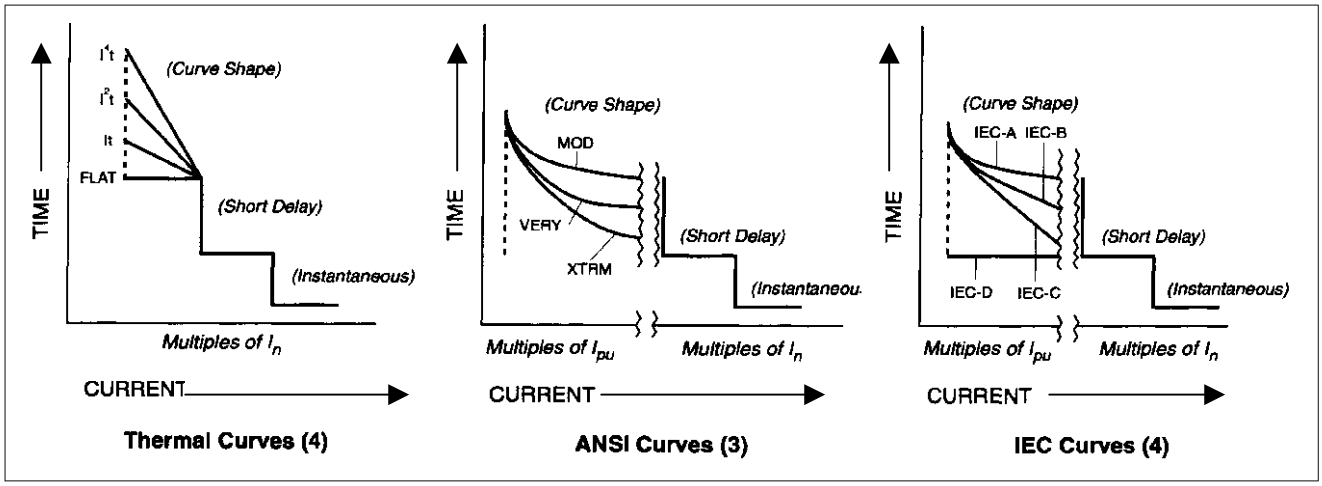

Fig. 3-1 Digitrip 3000 Time-Current Characteristic Curves

Fig. 3-2 Digitrip 3000 Typical Wiring Diagram

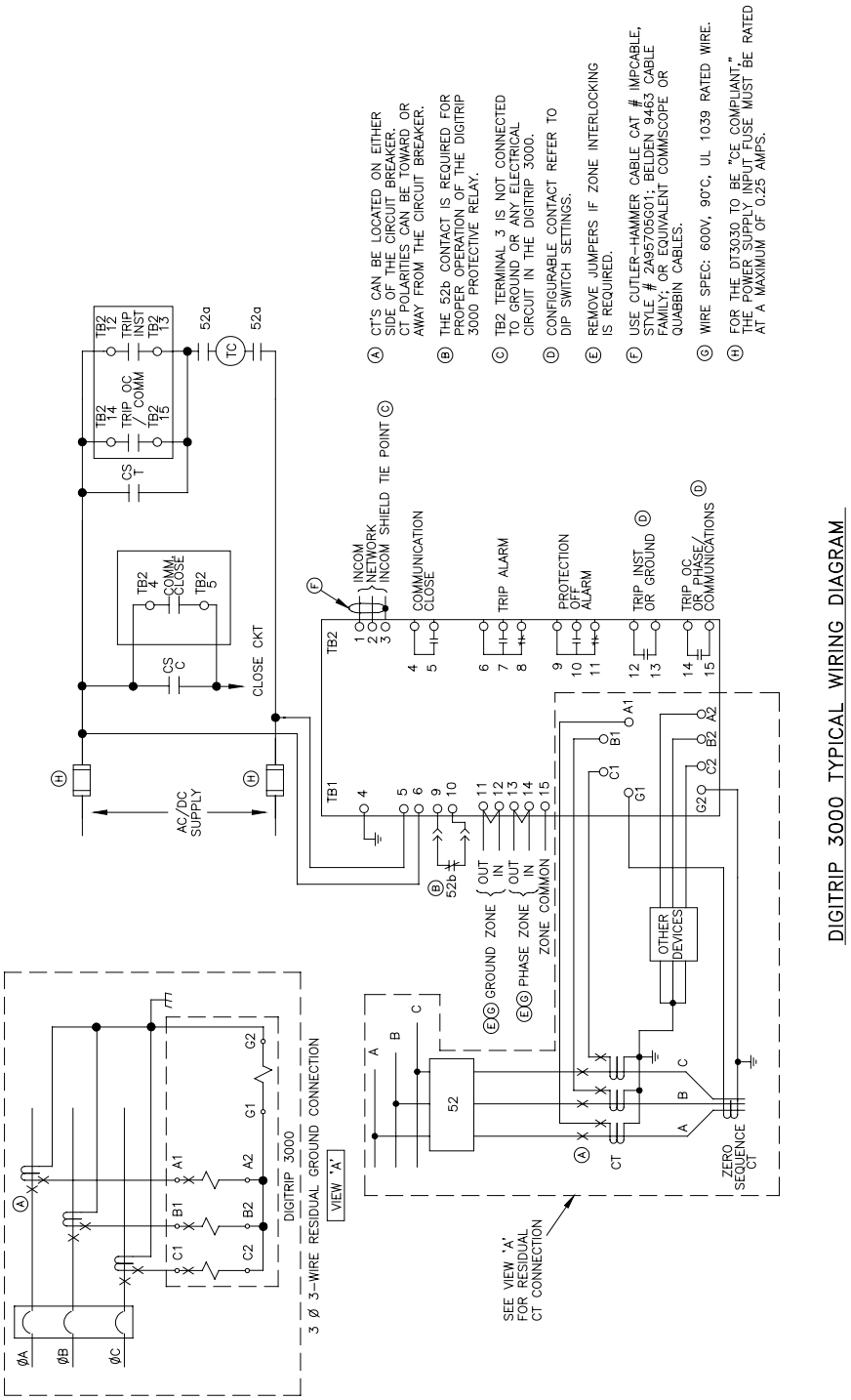

Instantaneous Protection
Instantaneous (short circuit) protection reacts to high level fault currents. The instantaneous pickup setting establishes the current level at which the relay's instantaneous trip relay will be energized with no time delay and is the instantaneous setting times (I_n).

"If "NONE" is selected, the instantaneous trip function is disabled and the discriminator option is offered. See the Phase Instantaneous section to review the discriminator option details.

If an Instantaneous Setting other than "NONE" is selected, the instantaneous portion of the overall curve can be moved independently in a horizontal direction. Figure 3-9 graphically illustrates this horizontal movement.

The instantaneous protection (INST) is designed to typically provide no less than 2 cycle total response time. To provide this fast response time the rms current detection level and display readout may differ somewhat from a true rms ampere value, if a significant percentage harmonic current is present.

Ground Fault Protection

The ground fault protection function can be a composite of the ground:

1. Inverse time overcurrent curve shape, pickup, and time.
2. Short delay pickup and time.
3. Instantaneous pickup. Its curve shape is independent of the phase curve.

There are two differences between Digitrip 3000 phase and ground functions. The inverse time overcurrent time multiplier values for the ground function of the thermal curves are for (1 x I_n). The inverse time overcurrent time multiplier values for the phase is (3 x 2). The short delay settings are more sensitive and can be set from (0.1 x I_n) to (11 x I_n). Movement of the pickup portion of the curve in a horizontal direction and the time portion of the curve in a vertical direction is similar to phase inverse time over-current, short delay and instantaneous functions previously described. Therefore, ground fault curve movement is not graphically illustrated. When programming ground fault protection, keep in mind that if "NONE" is selected, the ground fault protection is disabled. Even if the ground fault protection is disabled, a detectable ground current will still be displayed.

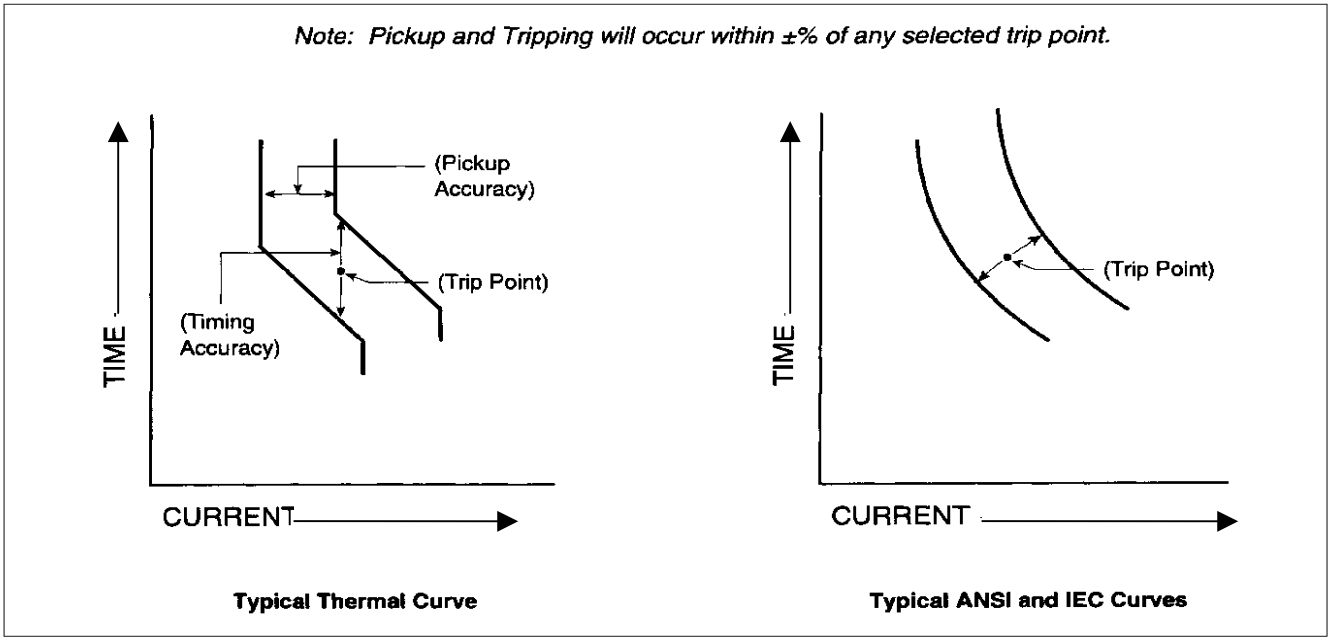

Fig. 3-3 Sample Electronic Trip Curves

Characteristic Curve Reminders

As previously mentioned, combining protective capabilities is a matter of coordination. The effects of one selection should always be evaluated against other selections to determine if the overall desired result is obtained. For this reason, keep in mind the following Digitrip 3000 selection possibilities and relay design features when programming the unit to closely coordinate with system protective needs:

1. When "NONE" is selected as a setting, the associated tripping function is disabled.
2. When "NONE" is selected for the Phase Instantaneous Setting, a Phase Discriminator option is offered.
3. The internal design of the Digitrip 3000 Protective Relay is such that the Short Delay Time setting might take precedence over the Inverse Time Overcurrent Time.

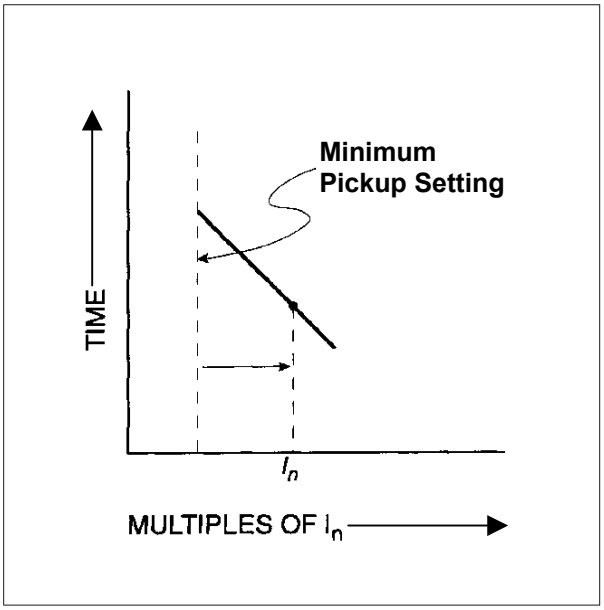

Fig. 3-4 Typical Inverse Time Overcurrent Pickup Horizontal Movement

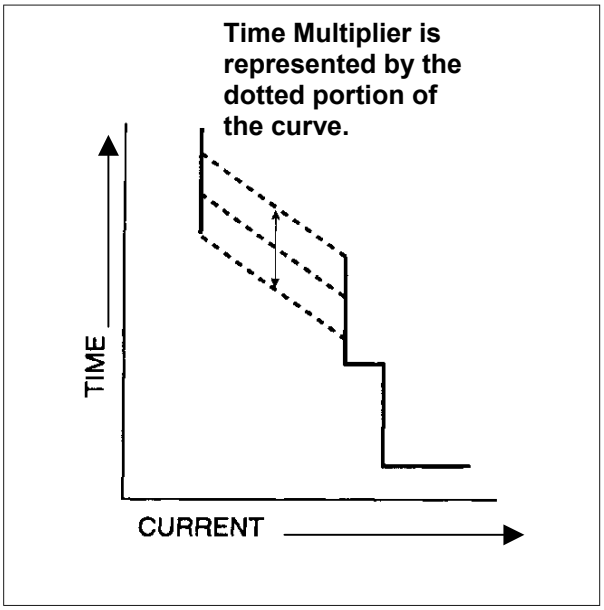

Fig. 3-5 Typical Time Multiplier Adjustment (I^2T Response)

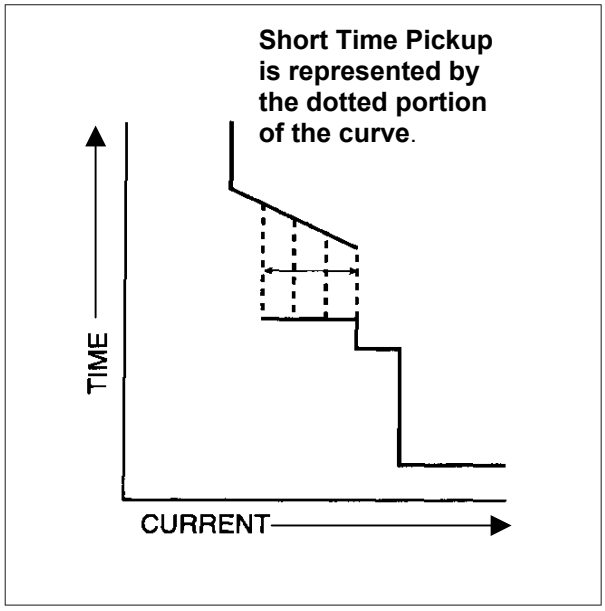

Fig. 3-6 Short Delay Setting Adjustment

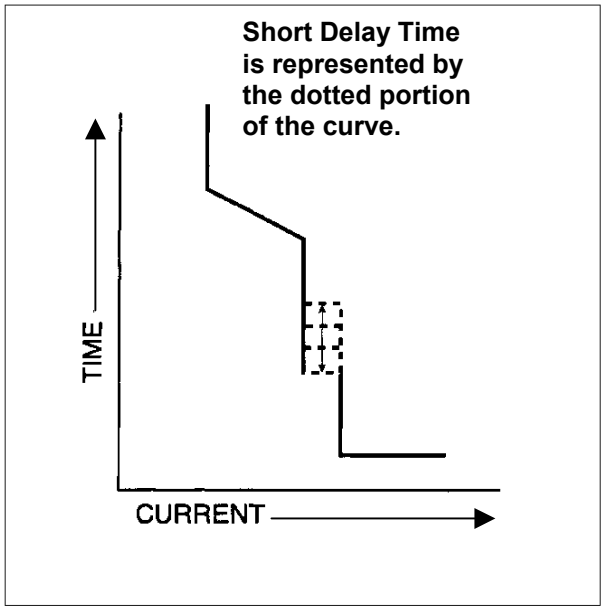

Fig. 3-7 Short Delay Time Adjustment

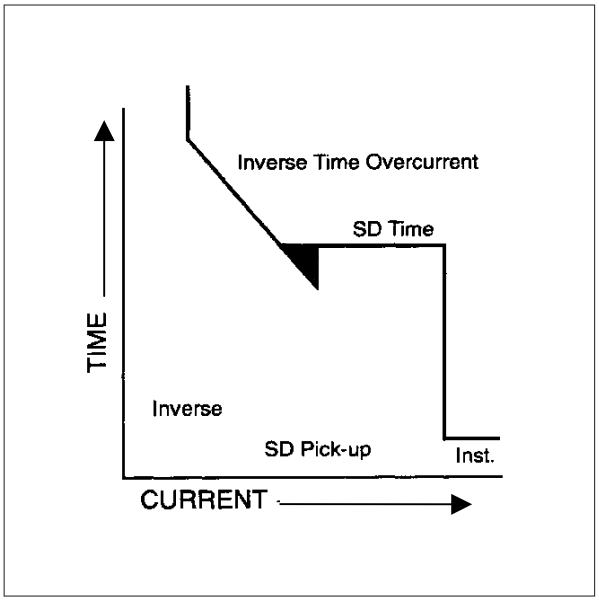

Fig. 3-8 Typical Curve with I^2T Shape

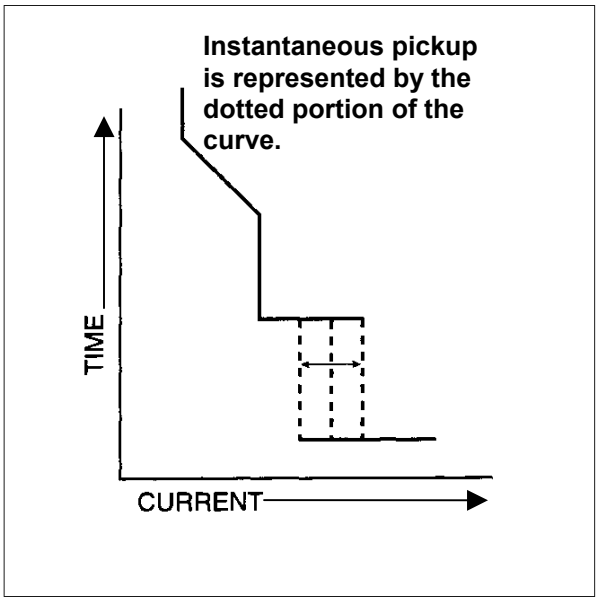

Fig. 3-9 Instantaneous Setting Adjustment

3-3.2 PROGRAM MODE

CAUTION

DIGITRIP 3000 PROTECTIVE RELAY SETTINGS MUST BE PROGRAMMED BEFORE THE RELAY IS PUT INTO OPERATION. CARE MUST BE TAKEN WHEN PROGRAMMING THE DIGITRIP 3000 WHILE THE BREAKER IS CLOSED AND CURRENT IS FLOWING. AN INCORRECT SETTING CONFIGURATION COULD CAUSE THE RELAY TO TRIP THE BREAKER WHEN SETTINGS ARE SAVED.

Notes:

1. *The Program Mode can be entered with the circuit breaker open or closed, depending on how DIP switch S2 is set. Refer to Table 5.1 for DIP switch settings. The circuit breaker position is determined via the normally closed breaker "b" contact on terminals 9 and 10 of TB1. Refer to the typical wiring diagram in Figure 3-1.*
2. *The settings that are altered during a programming session will not be saved until the Save Settings pushbutton is pressed and released.*
3. *If the circuit breaker is closed during a programming session and DIP Switch S2 is set to "off," the unit will exit the Program Mode without saving any new set point values and an "ERR" message will appear in the Settings/ Test Time/Trip Cause window.*
4. *When programming is concluded and new set points saved, the Program Mode pushbutton should be pressed and released to exit the Program Mode.*
5. *The Program Mode is also exited if the Reset pushbutton is pressed and released or if there is no programming activity for approximately 2-1/2 minutes.*

To enter the Program Mode, open the protective access cover and press and release the Program Mode On/Off pushbutton. The Program LED will blink green, indicating that the Program Mode has been entered. The present value of the first set point to be programmed (Curve Shape) will appear in the Settings/Test Time/Trip Cause Window, which will be referred to as the Alpha-numeric Display for the rest of this discussion. The Curve Shape LED will be blinking green. The Raise or Lower pushbuttons can now be used to change the value of the set point. Keep in mind that the Raise and Lower pushbuttons will roll over from highest to lowest and lowest to highest respectively. If either of the pushbuttons is held down and not released, their function is accelerated. This is true for all white pushbuttons on the panel face. The curve shape setting is selectable for both the phase and ground curves.

Pressing and releasing the Select Settings pushbutton will cause the unit to step to the next set point. This is the Phase Inverse Time Overcurrent Pickup setting. The Inverse Time Overcurrent Pickup LED will blink green. Simultaneously, the Phase LED will be blinking green, indicating that this setting is associated with the phase protection curve.

After the Raise and/or Lower pushbuttons are used to arrive at the desired Phase Inverse Time Overcurrent Pickup, the Select Settings pushbutton can be pressed

and released to step to the next set point, which is the Phase Time Multiplier. The Time Multiplier setting LED will blink green along with the Phase LED.

Pressing and releasing the Select Settings pushbutton will cause the unit to step to the Phase Short Delay Pickup setting. Selecting the “NONE” setting can disable this function. The Short Delay Pickup LED and the Phase LED will blink green. After the Raise and/or Lower pushbuttons are used to arrive at the desired setting, the Select Settings pushbutton is pressed and released to move to the next set point.

The next set point is Short Delay Time setting, unless “NONE” was selected for the Short Delay Pickup. If “NONE” was selected, the Short Delay Time setting will automatically be bypassed to the next setting, Phase Instantaneous Pickup.

When at the Phase Instantaneous Pickup setting, both the Instantaneous Pickup LED and the Phase LED will blink green. Once a selection other than “NONE” is made and the Select Settings pushbutton is pressed and released, the unit steps to the next set point. If “NONE” is the setting selected and the Select Settings pushbutton is pressed and released, the Phase and Instantaneous LED’s remain on and the unit will now offer a choice of whether to turn the discriminator option on or off. Once the discriminator option selection is made and the Select Settings pushbutton is pressed and released, the unit steps to the next set point.

Ground Inverse Time Overcurrent setting is the next set point. The Ground Curve Shape LED and the Ground LED will blink green. Use the Raise and/or Lower pushbuttons to arrive at the desired Ground Curve Shape Setting.

Programming the ground set points is handled in the same manner as was used in selecting the phase set points, except for the following:

1. Selecting “NONE” can disable the Ground Inverse Time Overcurrent Pickup. This is not possible on the Phase Inverse Time Overcurrent Pickup.
2. If “NONE” is selected for the Ground Instantaneous Pickup setting, there is no discriminator option, as was the case for Phase Instantaneous Pickup setting.

When all of the ground set points are established and the Select Settings pushbutton is pressed and released, the unit steps to the High Load Setting. The High Load LED will blink green and the last programmed value for the High Load time setting will appear in the alphanumeric display. Once this selection is made and the Select Settings pushbutton is pressed and released, the unit steps to the next set point.

The next set point selection to be made is the Frequency. The choices are 60Hz and 50Hz. When this selection is made and the Select Settings pushbutton is pressed and released, the relay steps to the Phase Ct Ratio Setting.

The Phase LED will blink green and the programmed value for the phase Ct will appear in the alphanumeric display. Once this selection is made and programmed, the Select Settings pushbutton is pressed and released to move to the last set point.

The last set point selection to be made is the Ground Ct Ratio Setting. Once this selection is made and programmed, the Select Settings pushbutton is pressed and released. The relay will cycle back to the first set point, Curve Shape.

It is possible to step backwards through the set points by pressing and holding down the Select Settings pushbutton, while pressing and releasing the Lower pushbutton.

To save the new settings at any time, press and release the Save Settings pushbutton. When the Save Settings pushbutton is pressed and released, the unit will blank the alphanumeric display for two seconds, and then display the last setting. At this moment, the unit will use the new set points for protection. After pressing the Save Settings pushbutton, the Program Mode can be exited by any one of three ways:

1. Press and release the Program Mode On/Off pushbutton.
2. Press and release the Reset pushbutton.
3. Perform no programming activity for 2 1/2 minutes.

CAUTION

THE SAVE SETTINGS PUSHBUTTON MUST BE PRESSED AND RELEASED BEFORE EXITING THE PROGRAM MODE. OTHERWISE, THE CHANGED SETPOINTS WILL NOT BE SAVED. IN ADDITION, AFTER THE PROGRAMMING OF SETTINGS IS COMPLETE, IT IS VERY IMPORTANT TO VERIFY ALL THE SETTINGS BY DEPRESSING THE “VIEW SETTINGS” PUSHBUTTON AND STEPPING THROUGH THE SETTINGS.

3-3.3 PROGRAMMING OVERVIEW

An overview of the programming function is presented here in terms of two flow charts. These flow charts are intended as quick references after the material presented in Section 3-3.2 has been reviewed.

The flow chart entitled “Programming Sequence Preview” (Figure 3-10) presents the general programming steps the Digitrip 3000 follows, always beginning with the Curve Shape” selection. Each time the “Select Settings” pushbutton is pressed and released, the relay advances to the next sequential step.

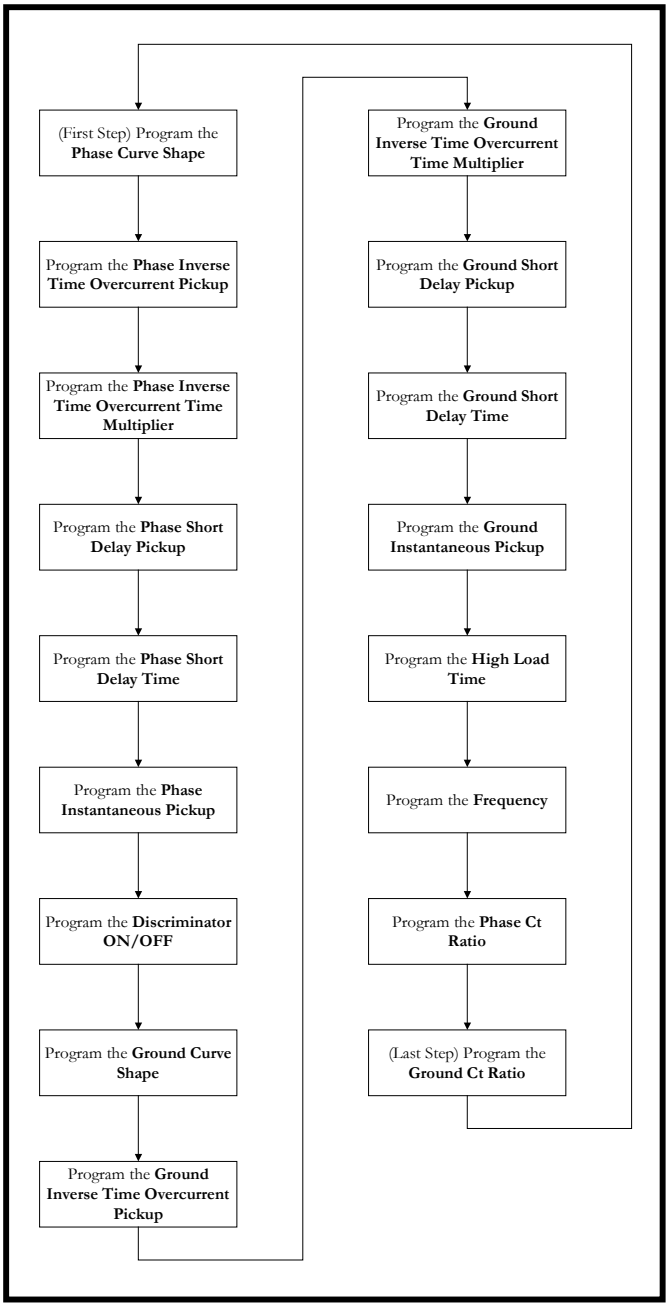

Fig. 3-10 Programming Sequence Preview

The flow chart entitled "Local Programming Sequence Flow Chart" (Figure 3-11) presents details of the programming function. A specific setting decision is called for at each DIAMOND SHAPED decision point. After a decision is made the "Select Settings" pushbutton is pressed and released to move to the next setting in the programming order.

3-3.4 TEST MODE

The Test Mode is not intended for live primary current interruption, but periodic tests that verify the functional performance of the relay. To enter the Test Mode, open the protective access cover. Press and release the Test Mode On/Off pushbutton. The following should be verified before proceeding:

1. The word TEST appears in the alphanumeric display.
2. The Test LED is blinking green.
3. The rms Amperes is blank.
4. An error message (ERR) does not appear in the alphanumeric display.

If there is greater than 0.1 per unit of current flowing on either a phase or ground circuit, the error message (ERR) will appear and there will be an automatic exit from the Test Mode. This maximum current value can be determined by multiplying 0.1 times the Ct primary current amperes rating.

Tests can be done on both phase and ground elements. For either of these tests a trip or no trip mode can be selected. A trip test will activate the trip coil while a no trip test exercises the trip function without activating the trip coil.

When in the Test Mode, the Select Tests pushbutton is pressed and released to step between the four groups of settings shown vertically in Table 2.2.

The Raise and Lower pushbuttons will move the display between the set points for each of the four groups. Within a group, the set points move horizontally (Table 2.2).

Pressing and releasing the Test pushbutton will initiate the selected test.

When the initiated test is complete, the appropriate front panel LED's will be red to indicate the cause of the trip.

The alphanumeric display shows the time to trip, and the numeric display shows the magnitude of the trip current. The Test Mode can be exited as follows:

1. Press and release the Test Mode On/Off pushbutton.
2. Press and release the Reset pushbutton.
3. Perform no testing activity for approximately 2 ½ minutes.

3-4 COMMUNICATIONS FUNCTION

The communication function can deliver all the data and flags that can be viewed locally on the relay to a host computer equipped with an appropriate software package. In addition, the host computer can initiate a "Communication Trip" and "Communication Close" control type command.

The Digitrip 3000 Protective Relay has a built in INCOM communication network port that is available on terminals 1 and 2 of TB2. The device Address and the desired BAUD Rate are programmed using the following pushbuttons located on the front panel: Select Tests, Test, Raise and Lower and Select Settings.

3-4.1 ADDRESS AND BAUD RATE SETTINGS

To enter the mode that permits changing the device Address and/or BAUD Rate, depress and hold the Test Pushbutton and then depress and release the "Select Tests" Pushbutton. The BAUD Rate and Address respectively will appear in the Settings/Test Time/Trip Cause Window. The Test Pushbutton can now be released. The last digit on the right is flashing. Press and release the Select Settings Pushbutton to shift the flashing portion of the display horizontally from the lowest address digit on the right to the last display on the left, which is the BAUD rate. The BAUD rate will flash with an "H" (High BAUD Rate = 9600) or an "L" (Low BAUD Rate = 1200). To increase or decrease the flashing digit or flashing baud rate, press and release the Raise or Lower Pushbuttons. When completed, depress the Save Set points Pushbutton to save and exit this mode.

In the past sections we discussed several message the DT3000 may display, below is a list of each message and their meanings.

Message	Meaning
TEST	• The system has entered test mode.
RAM	• A ram check error was detected.
ERR	• An error in the test mode has occurred. • An error in the EPROM set points was detected.
PRGM	• The system has entered program mode.
LDT	• The Digitrip 3000 tripped via the inverse time overcurrent function.
SDT	• The Digitrip 3000 tripped via the short delay function.
INST	• The Digitrip 3000 tripped via the instantaneous function.
DISC	• The Digitrip 3000 tripped via the discriminator function.
EXTT	• An external trip occurred via INCOM communications.
OVER	• The Digitrip 3000 tripped via an override (60 per unit fixed instantaneous).
ORNG	• The Digitrip 3000 tripped via an overrange value (trip value is greater than 28 per unit).

SECTION 4: APPLICATION CONSIDERATIONS

4-1 ZONE INTERLOCKING CAPABILITIES

To minimize damage to the system, faults should be cleared as quickly as possible. Zone selective interlocking provides this capability better than a system with only selective coordination.

When the "Ground Zone Interlocking" feature is utilized, an immediate trip is initiated when the fault is in the breaker's zone of protection, regardless of its preset time delay. When the "Phase Zone Interlocking" feature is utilized, the inverse time overcurrent and short delay phase elements work as follows. The short delay phase element will initiate an immediate trip when the fault is in the breaker's zone of protection, regardless of its preset time delay. **For the inverse time overcurrent phase element, the current sensed by the Digitrip 3000 must exceed 300 percent (3 x I_n) for the zone selective interlocking to initiate an immediate trip signal.** This interlocking signal requires only a pair of wires from the downstream breaker to the upstream breaker.

When a Digitrip 3000 initiates a trip signal, the zone interlocking signal stays active for an additional 175 milliseconds. Therefore, if a downstream Digitrip 3000 is zone interlocked to an upstream Digitrip 3000, the downstream breaker will have 175 milliseconds to clear the fault before the upstream Digitrip 3000 is allowed to react to that same fault.

Zone interlocking, therefore, provides fast tripping in the zone of protection, but gives positive coordination between mains, feeders and downstream breakers. For faults outside the zone of protection, the Digitrip 3000 on the breaker nearest the fault sends an interlocking signal to the Digitrip 3000 protective devices of the upstream breakers. This interlocking signal restrains tripping of the upstream breakers until their set coordination times are reached. Thus zone interlocking, applied correctly, can result in minimum damage with a resultant minimum disruption of service.

Zone selective interlocking is available on Digitrip 3000 Protective Relays for the inverse time and short time functions on the phase and ground elements. Refer to Figure 4-1 for a typical ground zone selection interlocking wiring diagram or refer to Figure 4-2 for a typical phase zone selection interlocking wiring diagram.

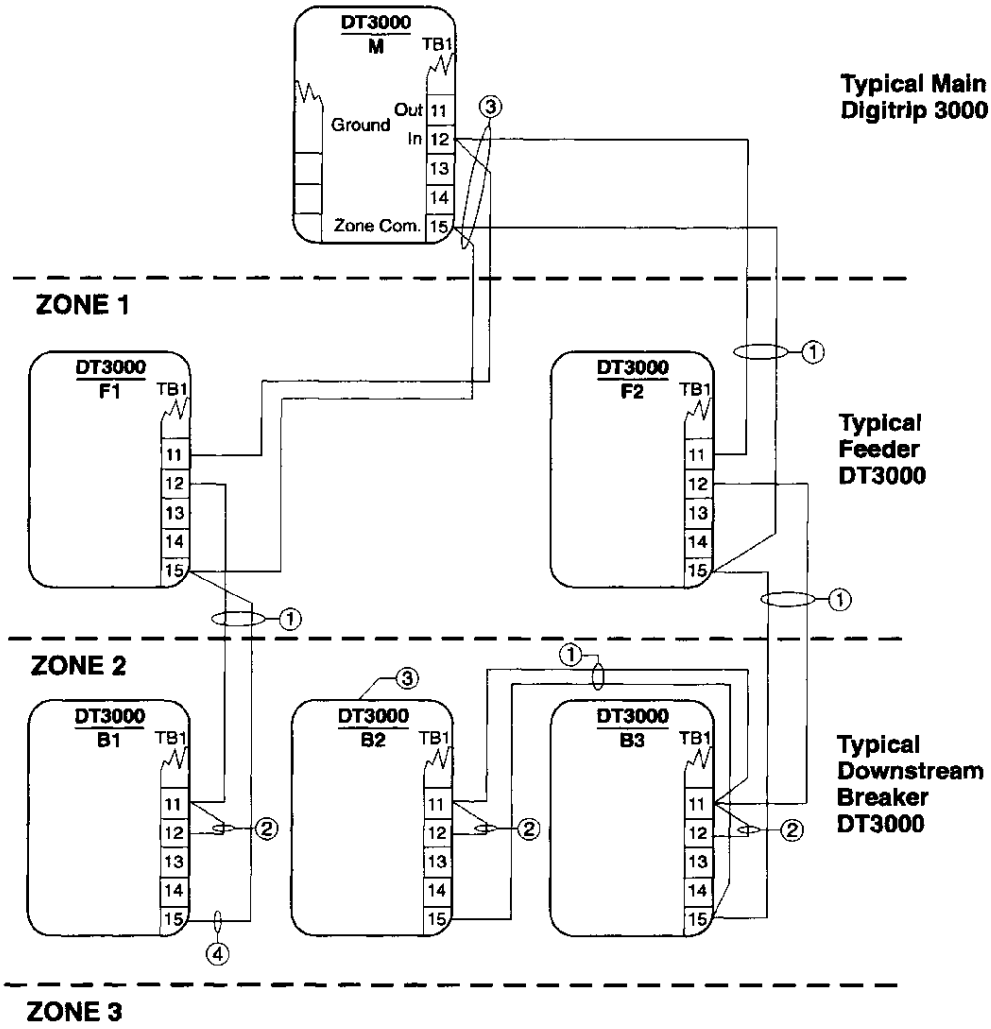

① For ground zone interconnection cable, see cable specifications on Fig. 3-2. Maximum distance between the first and last zone should be 250 feet. Route separate from power conductors.

② Jumper on devices in last zone used to provide time delay per inverse time overcurrent or short delay time setting. If the jumper is not used the Digitrip 3000 will initiate trip without time delay (nominally 0.1 seconds).

③ Up to 10 Digitrip devices may be wired in parallel to provide a single upstream restraint signal.

④ Only 1 Zone common used for both phase and ground. **DO NOT CONNECT ZONE COMMON TO EARTH GROUND.**

Fig. 4-1 Connection Diagram for Typical Ground Zone Selective Interlocking

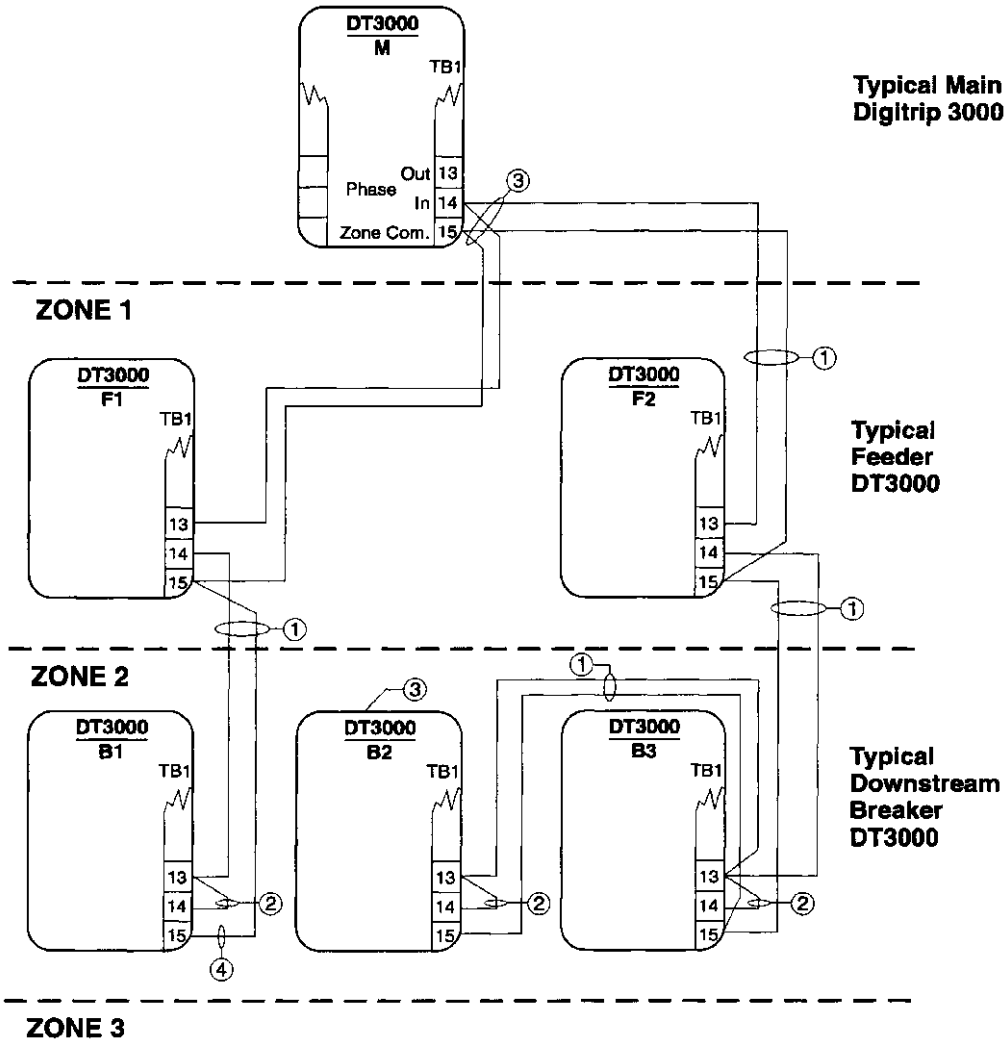

① For phase zone interconnection cable, see cable specifications on Fig. 3-2. Maximum distance between the first and last zone should be 250 feet. Route separate from power conductors.

② Jumper on devices in last zone used to provide time delay per inverse time overcurrent or short delay time setting. If the jumper is not used the Digitrip 3000 will initiate trip without time delay (nominally 0.1 seconds).

③ Up to 10 Digitrip devices may be wired in parallel to provide a single upstream restraint signal.

④ Only 1 zone common used for both phase and ground. **DO NOT CONNECT ZONE COMMON TO EARTH GROUND.**

Fig. 4-2 Connection Diagram for Typical Phase Zone Selective Interlocking

SECTION 5: INSTALLATION, STARTUP AND TESTING

5-1 INTRODUCTION

This section describes mounting, wiring, startup and miscellaneous testing details associated with the Digitrip 3000 Protective Relay.

WARNING

INSURE THAT THE INCOMING AC POWER AND FOREIGN POWER SOURCES ARE TURNED OFF AND LOCKED OUT BEFORE PERFORMING ANY WORK ON THE DIGITRIP 3000 TRIP UNIT OR ITS ASSOCIATED EQUIPMENT. FAILURE TO OBSERVE THIS PRACTICE COULD RESULT IN EQUIPMENT DAMAGE, SERIOUS INJURY AND/OR DEATH.

5-2 PANEL PREPARATION

This section describes the panel preparation and mounting of the Digitrip 3000 Protective Relay. If you are using the Digitrip 3001 Drawout Relay please refer to Appendix A. If you using the Digitrip 3000 Dual Source Power Supply (DSPS) addition please refer to Appendix B.

5-2.1 CUTOUT

Since the Digitrip 3000 Protective Relay is typically mounted on a cabinet door, it is necessary to prepare a cutout in which it will be placed. The dimensions for this cutout, along with the location of the six mounting holes, are shown in Figure 5-1.

Before actually cutting the panel, be sure that the required 3-dimensional clearances for the relay chassis allow mounting in the desired location. Digitrip 3000 Protective Relay dimensions are shown in Figure 5-2. It is necessary to hold the tolerances shown when making the cutouts and placing the holes for the mounting screws. In particular, the horizontal dimensions between the center of the mounting holes and the vertical edge of the cutout must be within 0 and +0.050 in. (0.13 cm).

5-2.2 MOUNTING

Do not use a tap on the face of the relay since this will remove excessive plastic from the holes, resulting in less threaded material to secure the relay to it mounting panel.

Place the Digitrip 3000 Protective Relay through the cutout in the panel. Be sure the Operator Panel faces outward.

Use the 0.38 in. (0.9 cm) long screws included with the relay to mount the unit on a single-thickness panel.

Be sure to start the screws from INSIDE the panel, so they go through the metal first.

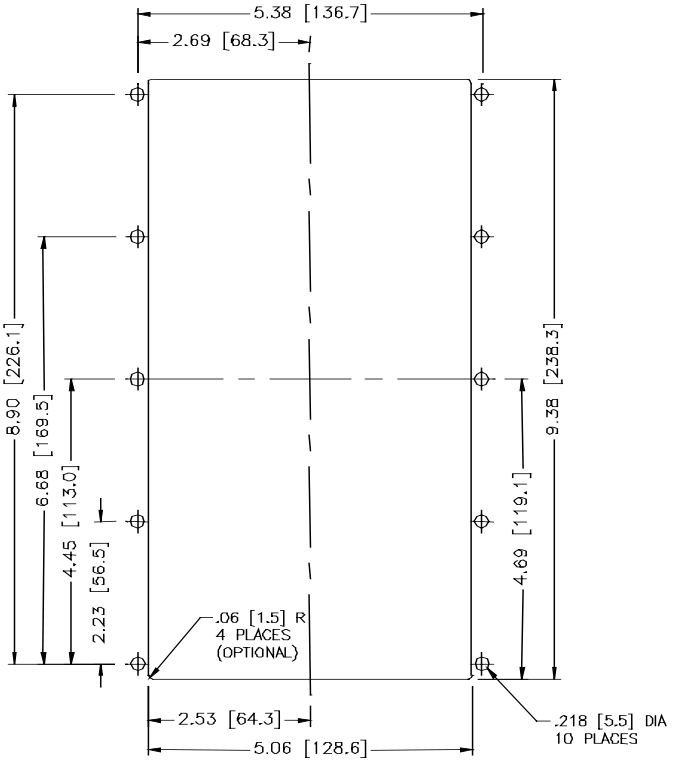

Fig. 5-1 Cutout Dimensions (Inches)

5-3 REPLACING DIGITRIP MV WITH DIGITRIP 3000

The Digitrip 3000 can be installed as a direct replacement for the Digitrip MV with proper DIP switch settings as shown in Table 5.1. The following five points must be considered when configuring a Digitrip 3000 to function as a Digitrip MV.

1. DIP switches S1, S2 and S3 must be set to the OFF position.
2. The selected curve shape must be It, I^2t, I^4t or FLAT.
3. The phase and ground curves must be set the same.
4. The Ct settings must be set from the front panel. They cannot be set via IMPACC.
5. The thermal curves are only used for system coordination.

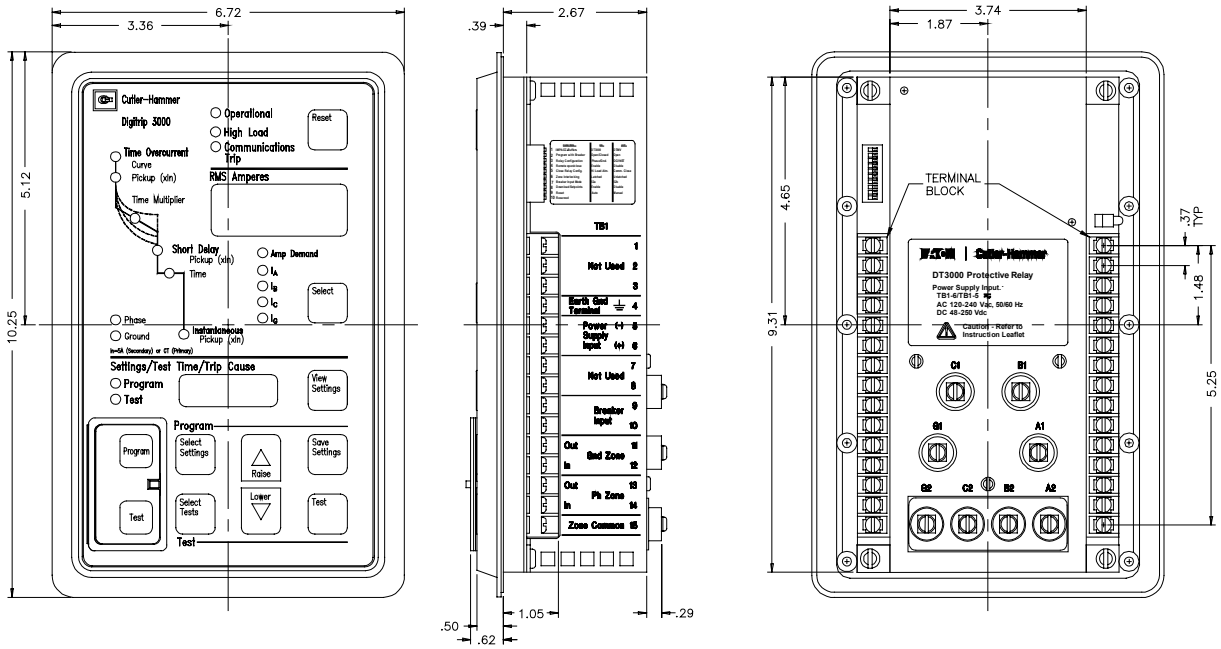

Fig. 5-2 Digitrip 3000 Protective Dimensions (Inches)

TABLE 5.1 DIGITRIP 3000 DIP SWITCH SETTINGS①

Switch	FUNCTION	SWITCH POSITIONS ON (=0)	OFF (=1)
S1	PowerNet/IMPA CC Buffers	Digitrip 3000	Digitrip MV
S2	Program with Breaker	Open or Closed	Open Only
S3	Trip Relay Configuration	Phase / Ground	OC/Inst
S4	Remote Open/Close	Enable	Disable
S5	Close Relay Configuration	Hi Load Alarm	Comm. Close
S6	Zone Interlocking	Latched	Unlatched
S7	Breaker Input Mode	52a	52b
S8	Download Set points	Enable	Disable
S9	Reset	Auto	Manual
S10	Reserved	XXXX	XXXX
①For additional DIP Switch information, refer to Paragraph 2-2.2			

5-4 WIRING

The wiring of the Digitrip 3000 Protective Relay must follow a suitable "wiring plan drawing." The term wiring plan, as used here, refers to the drawings made for the specific application. It describes all electrical connections between the Digitrip 3000 and external equipment. The user makes this drawing. It may also be helpful to refer to the relay's specific wiring diagram shown in Figure 3-1. An example of a typical wiring plan is shown in Figure 2-1. Note the following:

1. The wires to the terminal blocks must not be larger than AWG No. 14. Larger wire will not connect properly to the terminal block. However, larger size wires can be used for the Ct connections, with appropriate ring terminal.
2. The terminal block has No. 6-32 sems pressure saddle screws.
3. All contacts are shown in their de-energized position. Note that the Protection Off Alarm Relay is energized when control power is applied.
4. The Digitrip 3000 comes with zone interlocking jumpers installed (TB1 Terminals 11 to 12 and 13 to 14). Depending on the application of zone interlocking, these jumpers may have to be removed.

Note: Refer to the Specifications and Test Summary for proper power supply input requirements. All wiring must conform to applicable federal, state and local codes.

5-5 INITIAL STARTUP

Use this information when first applying control power to the Digitrip 3000 Protective Relay.

5-5.1 BEFORE POWER APPLICATION

a) Verify that all wiring is correct, as shown on the wiring plan drawing.
b) Set the DIP switches per Table 5.1 to configure the Digitrip 3000.

5-5.2 INITIAL POWER APPLICATION

a) Apply control power to the Digitrip 3000 Protective Relay.
b) Insure that the Operational LED on the front of the relay is blinking green.

5-6 MISCELLANEOUS TESTING

CAUTION

DO NOT PERFORM DIELECTRIC TESTING BETWEEN THE DIGITRIP'S METAL BACKPLATE OR THE EARTH GROUND TERMINAL (TB1-4) AND EITHER OF THE CONTROL VOLTAGE INPUT TERMINALS (TB1-5,TB1- 6) AND AUXILIARY "52B" INPUT TERMINALS (TB1-9, TBI -1 0). BOTH OF THESE SETS OF TERMINALS HAVE SURGE PROTECTION MOVS INSTALLED TO EARTH GROUND AND COULD BE ADVERSELY AFFECTED BY SUCH TESTING.

Dielectric Notes:

1. The current transformer input terminals labeled (A1, A2), (B1, B2), (C1, C2) and (G1, G2) are 5 ampere type current, transformer inputs. These inputs have a 3000 volt ac breakdown rating for 1 minute between phases.
2. The relay output contacts COMMUNICATIONS CLOSE, TRIP INST AND TRIP OC/COMMUNICATIONS have a 2000 volt ac breakdown rating for 1 minute between open contacts. The relays trip alarm and protection off alarm have a 1000 volt ac breakdown rating.
3. All other terminals have a 1500 volt ac breakdown voltage for 1 minute to earth ground except for the above CAUTION restraint.

SECTION 6: MAINTENANCE AND STORAGE

6-1 GENERAL

The Digitrip 3000 Protective Relay is designed to be a self contained and maintenance free unit. The printed circuit boards are calibrated and conformally coated at the factory. They are intended for service by factory trained personnel only. The Troubleshooting Guide (Table 6.1) is intended for service personnel to identify whether a problem being observed is external or internal to the unit. If a problem is identified to be internal, the unit should be returned to the factory for repair or replacement as described in the "Replacement" section below.

6-1.1 STORAGE

The Digitrip 3000 Protective Relay should be stored in an environment that does not exceed the specified storage temperature range of -40°C to +70°C. The environment should also be free of excess humidity. There are no aluminum electrolytic capacitors used in the relay, therefore it is not a requirement to power the unit occasionally. If possible, the relay should be stored in its original packing material and container.

6-2 TROUBLESHOOTING GUIDE (TABLE 6.1)

WARNING

ALL MAINTENANCE PROCEDURES MUST BE PERFORMED ONLY BY QUALIFIED PERSONNEL WHO ARE FAMILIAR WITH THE DIGITRIP 3000 PROTECTIVE RELAY, THE ASSOCIATED BREAKER AND CURRENT LINES BEING MONITORED. FAILURE TO OBSERVE THIS WARNING COULD RESULT IN EQUIPMENT DAMAGE, SERIOUS INJURY, AND/OR DEATH.

TROUBLESHOOTING PROCEDURES MAY INVOLVE WORKING IN EQUIPMENT AREAS WITH EXPOSED LIVE PARTS WHERE THE HAZARD OF A FATAL ELECTRIC SHOCK IS PRESENT. PERSONNEL MUST EXERCISE EXTREME CAUTION TO AVOID INJURY OR EVEN DEATH.

ALWAYS DISCONNECT AND LOCK OUT THE CURRENT SOURCE AND CONTROL POWER SUPPLY BEFORE TOUCHING THE COMPONENTS ON THE REAR OF THE DIGITRIP 3000 PROTECTIVE RELAY.

6-3 REPLACEMENT

Follow these procedural steps to replace the Digitrip 3000 Protective Relay.

Step 1: Turn off control power at the main disconnect or isolation switch of the control power supply. If the switch is not located in view from the relay, lock it out to guard against other personnel accidentally turning it on.

Step 2: Verify that all "foreign" power sources wired to the relay is de-energized. These may also be present on the alarm terminal block. Current transformer inputs must be temporarily shorted at a point prior to the relay's terminals before attempting to open these terminals on the Digitrip 3000.

Step 3: Before disconnecting any wires from the unit, make sure they are individually identified to ensure that reconnection can be correctly performed.

Step 4: Remove wires by loosening or removing the screw terminal where there is a wire connection.

Step 5: Remove the mounting screws holding the unit against the door or panel. These are accessed from the rear of the relay. Carefully lay the screws aside for later use.

CAUTION

SUPPORT THE PROTECTIVE RELAY FROM THE FRONT SIDE WHEN THE SCREWS ARE LOOSENED OR REMOVED. WITHOUT SUCH SUPPORT, THE PROTECTIVE RELAY COULD FALL OR THE PANEL COULD BE DAMAGED

Step 6: Mount the replacement unit. Read the “Mounting” section of this document before attempting this.

Step 7: Replace the mounting screws.

Step 8: Replace each wire at the correct terminal. Be sure that each is firmly tightened. Remove temporary shorts on incoming current transformers.

Step 9: Restore control power. Refer to the “Initial Power Application” section of this document.

TABLE 6.1 TROUBLESHOOTING GUIDE

Symptom	Probable Cause	Possible Solution(s)	Reference
Operational LED is Off	• Protective Relay's Control Power is Deficient or Absent • Protective Relay is Malfunctioning	• Verify that Control Power is Connected Between TB1 -5 and B1 -6 and that it is within Specifications • Replace the Protective Relay	• Figure 3-1 and Paragraph 2-3 • Paragraph 6-3
Operational LED is On but Does not Blink	• Protective Relay's Control Power is Deficient or Absent • Protective Relay is Malfunctioning	• Verify that Control Power is Connected Between TBI-5 and TBI-6 and it is within Specifications • Replace the Protective Relay	• Figure 3-1 and Paragraph 2-3 • Paragraph 6-3
Operational LED Blinks Red	• Internal Problem Detected	• Press Reset Pushbutton • Reprogram Set points • Replace Protective Relay if Symptom Persists	• Paragraph 2-2.1 and 3-2 • Paragraph 3-3.2 • Paragraph 6-3
Operational LED is NOT Definite Red or Green	• Internal Problem Detected	• Press Reset Pushbutton • Reprogram Set points • Replace Protective Relay if Symptom Persists	• Paragraph 2-2.1 and 3-2 • Paragraph 3-3.2 • Paragraph 6-3
"PGRM" Appears in Settings Display Window	• Set points are Invalid • Check sum did not Match	• Reprogram Set points • Replace Protective Relay if "PGRM" Reappears After Saving Settings	• Paragraph 3-3.2 • Paragraph 6-3
"ERR" Appears in Setting	• There was an Error During Set point Programming • There was an Error While in the Test Mode	• Make Sure DIP switch S2 is in Correct Position • More than 0.1 Per Unit of Current Cannot Flow While in Test Mode	• Table 5.1 • Paragraph 3-3.3
"RAM" Appears in Settings Display Window	• An Internal RAM Check Failed	• Remove Power from the Protective Relay and then Reapply Power - If the Symptom Persists, Replace the Protective Relay	• Paragraph 6-3
Current Readings Appear Incorrect	• Incorrect CT Ratio used in Equipment • Incorrect Current Wiring • Incorrect System Frequency Programmed • Breaker Contact to trip unit not functioning	• Verify CT Ratio in Equipment • Verify Connections on CT Wiring • Set to Correct Frequency • Insure Proper Contact Type is Connected to Protective Relay and Functioning	• Paragraph 1-3 and Paragraph 3-3.2 • Figure 3-1 • Paragraph 3-3.2 • Figure 3-1
Circuit Breaker Trips Much Faster than Expected on Inverse Time Overcurrent	• Incorrect Settings • Phase Zone Interlocking not used and Jumper Missing • Ground Zone Interlocking not Used and Jumper Missing	• Check Settings • Check for Phase Zone Interlocking Jumper Between TB1 -13 and TB1 -14 • Check for Ground Zone Interlocking Jumper Between TB1 -11 and TB1 –12	• Paragraph 3-3.2 and Table 5.1 • Figure 3-1 • Figure 3-1

Circuit Breaker Trips Much Faster than Expected on Inverse Time Overcurrent (continued)	• Zone Interlocking Used	• Check for Absence of Blocking Signal from "Down-Stream" Breaker **NOTE**: *During an Internal Test, there is No Blocking Signal from a "DownStream" Breaker, therefore, add jumper for test.*	• Paragraph 4-2
Circuit Breaker Trips Much Slower than Expected on Inverse Time Overcurrent	• The Short Delay Time Setting Determines the Minimum Inverse Time Overcurrent	• Check Coordination Curves for Short Delay and Inverse Time Overcurrent Settings	• Section 7, Paragraph 3-3.1
Protective Relay Indicates a Trip, but Circuit Breaker Doesn't Open	• Improper Wiring from Protective Relay • Unit in Test Mode with "No Trip Test Selected"	• Check Trip Relay Wiring **NOTE**: *Instantaneous and Override Trip Functions Close the Contact Between TB2-12 and TB2-13, while Inverse Time Overcurrent and External Trip Functions Close the Contact Between TB2-14 and TB2-15* • Check that Trip Contact on Protective Relay makes • Select Trip Test while in the Test Mode • Check Wiring from Protective Relay to Circuit Breaker Trip Coil • Check that Circuit Breaker has Source of Tripping Power	• Figure 3-1 • Figure 3-1 • Paragraph 3-3.3 • Wiring Plan Drawing • Wiring Plan Drawing
Auto-Reset Function not Operational	• Breaker Contact to Protective Relay not Functioning • DIP switch S9 not set correctly	• Check wiring from Breaker Dry Contact to TB1-9 and TB1 -10 of Protective Relay Terminal Block • Check DIP Switch S9 Setting • Check that Contact is Operational	• Figure 3-1 and 5-3 • Table 5.1 • Figure 5-3
Manual Reset Function not Operational	• Dip Switch S9 not set correctly • Damaged Reset Pushbutton	• Check DIP Switch Setting • Replace Protective Relay	• Table 5.1 • Paragraph 6-3
Caution: When the Digitrip 3000 Protective Relay is Powered, it Supplies Voltage to the "b" Contacts			

SECTION 7: TIME-CURRENT CURVES

7-1 DIGITRIP 3000 INVERSE TIME OVERCURRENT CURVES

The following pages contain the specific time-current curves applicable to the Digitrip 3000 Protective Relay.

Figure 7-1a Inverse Time Overcurrent Phase, I^4T Curves (SC-5390-92B)
DT 3100 & DT 3101 Users See Figure 7-1b

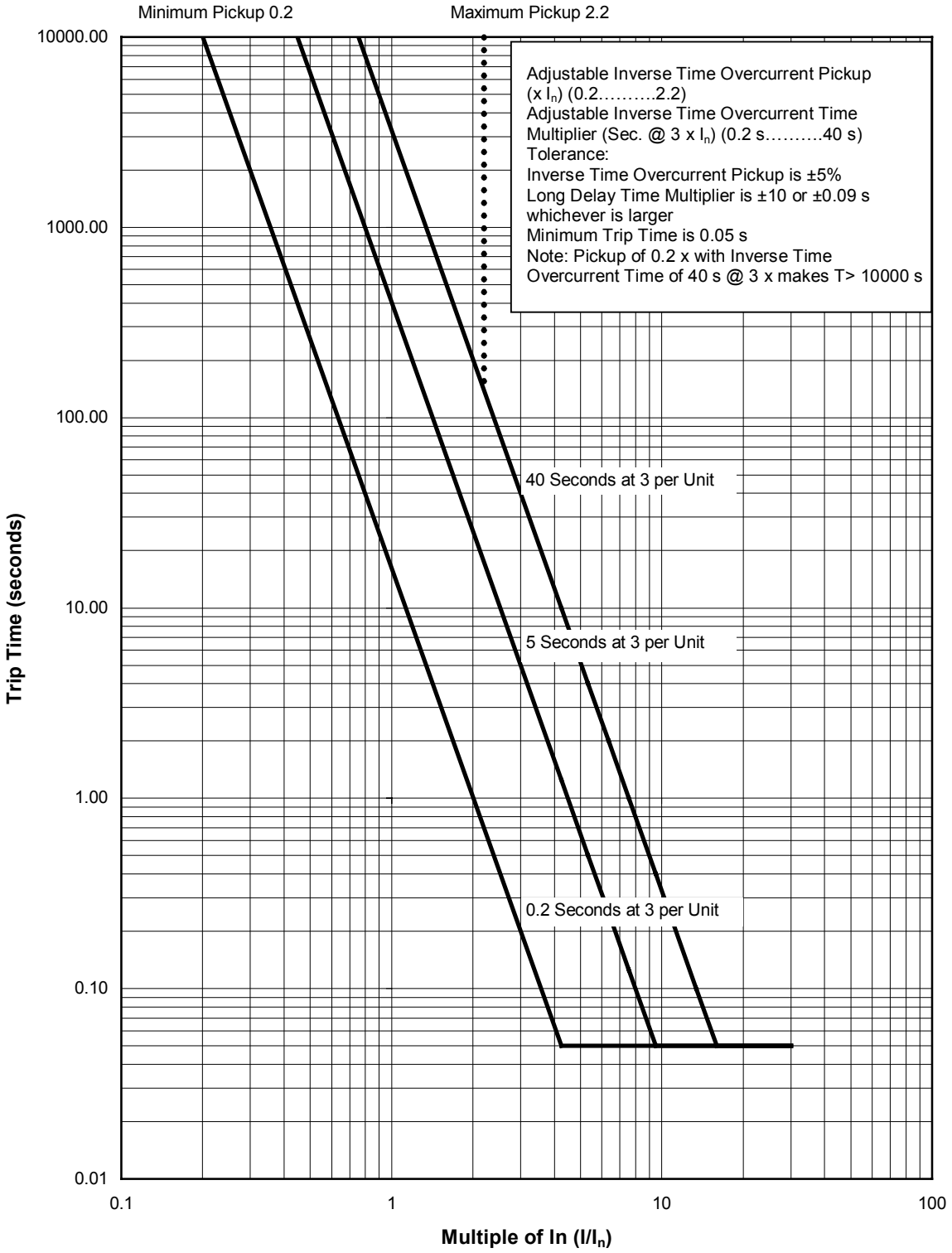

Figure 7-1b Inverse Time Overcurrent Phase, I^4T Curves (SC-5390-92B)
For DT 3100 & DT 3101 Users ONLY

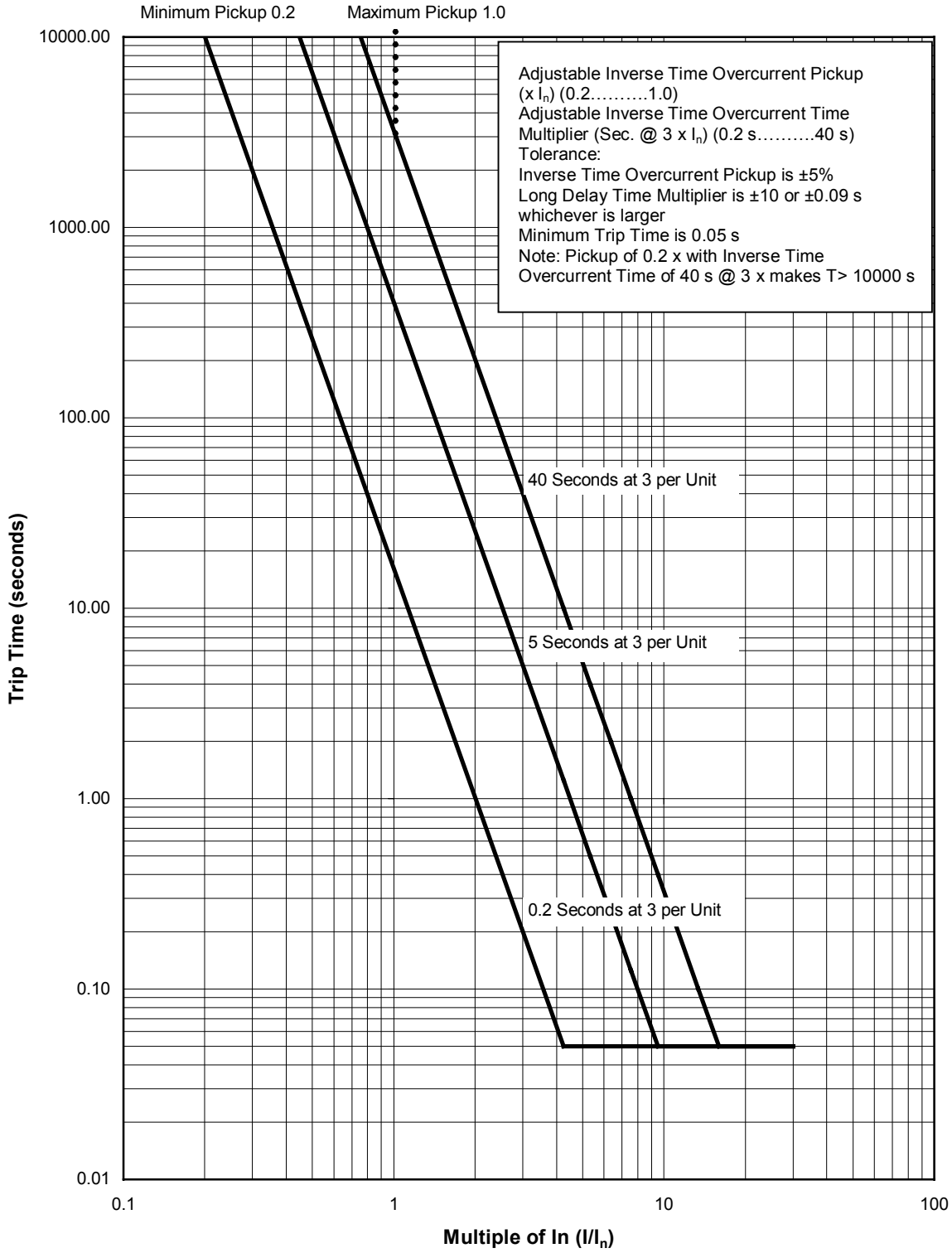

Figure 7-2a Inverse Time Overcurrent Phase I^2T Curves (SC-5391-92B)
DT 3100 & DT 3101 Users See Figure 7-2b

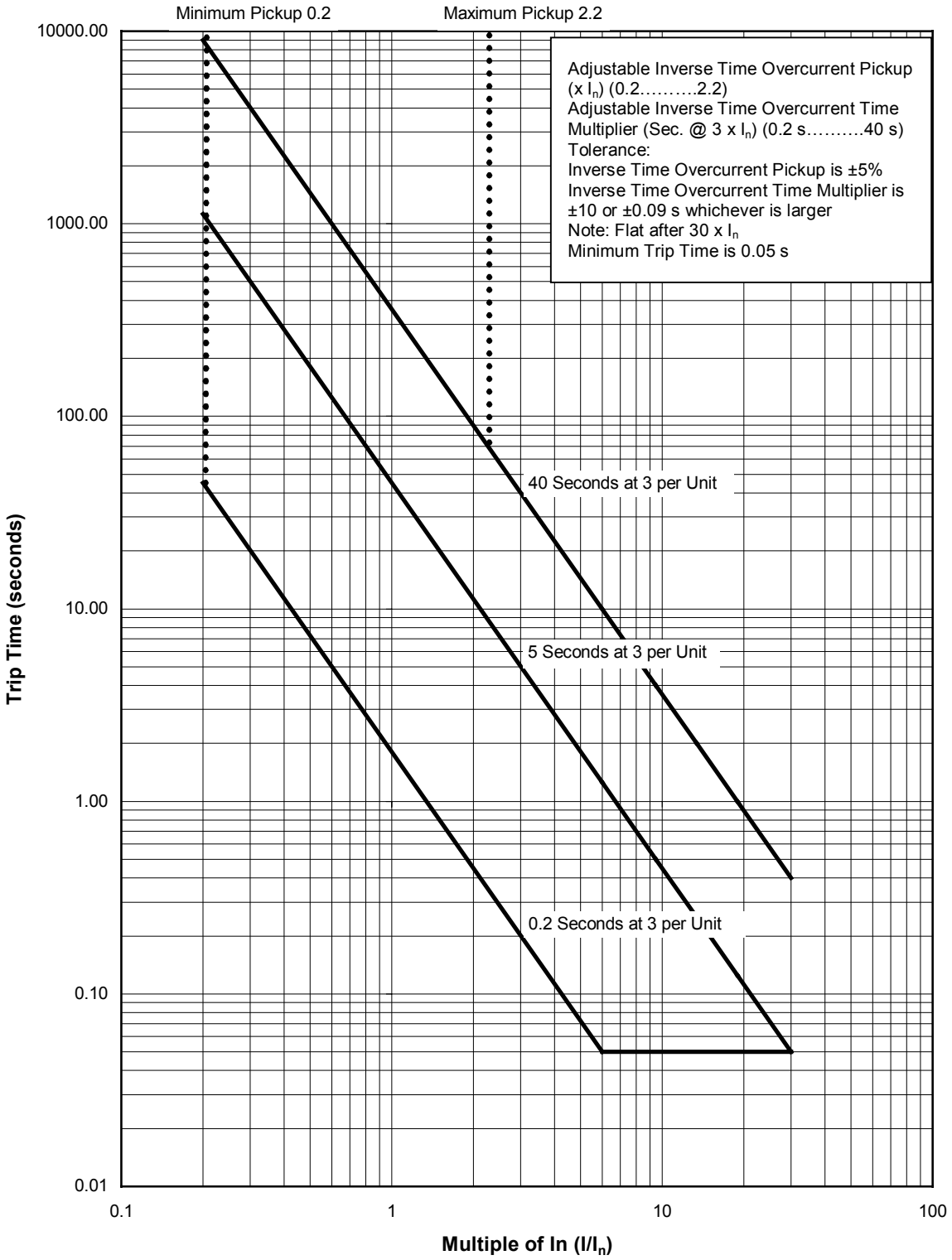

Figure 7-2b Inverse Time Overcurrent Phase I^2T Curves (SC-5391-92B)
For DT 3100 & DT 3101 Users ONLY

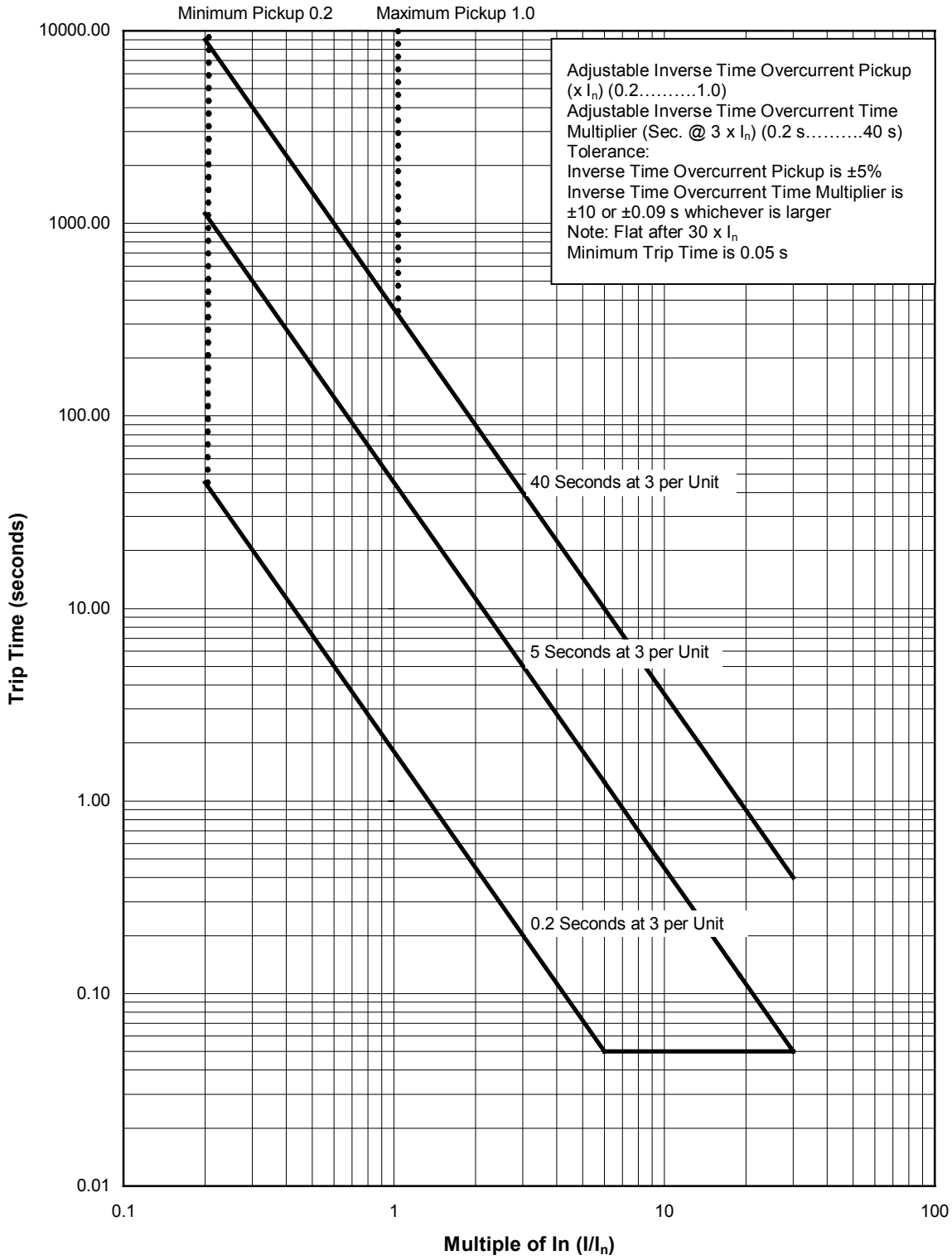

Figure 7-3a Inverse Time Overcurrent Phase, IT Curve (SC-5392-92B)
DT 3100 & DT 3101 Users See Figure 7-3b

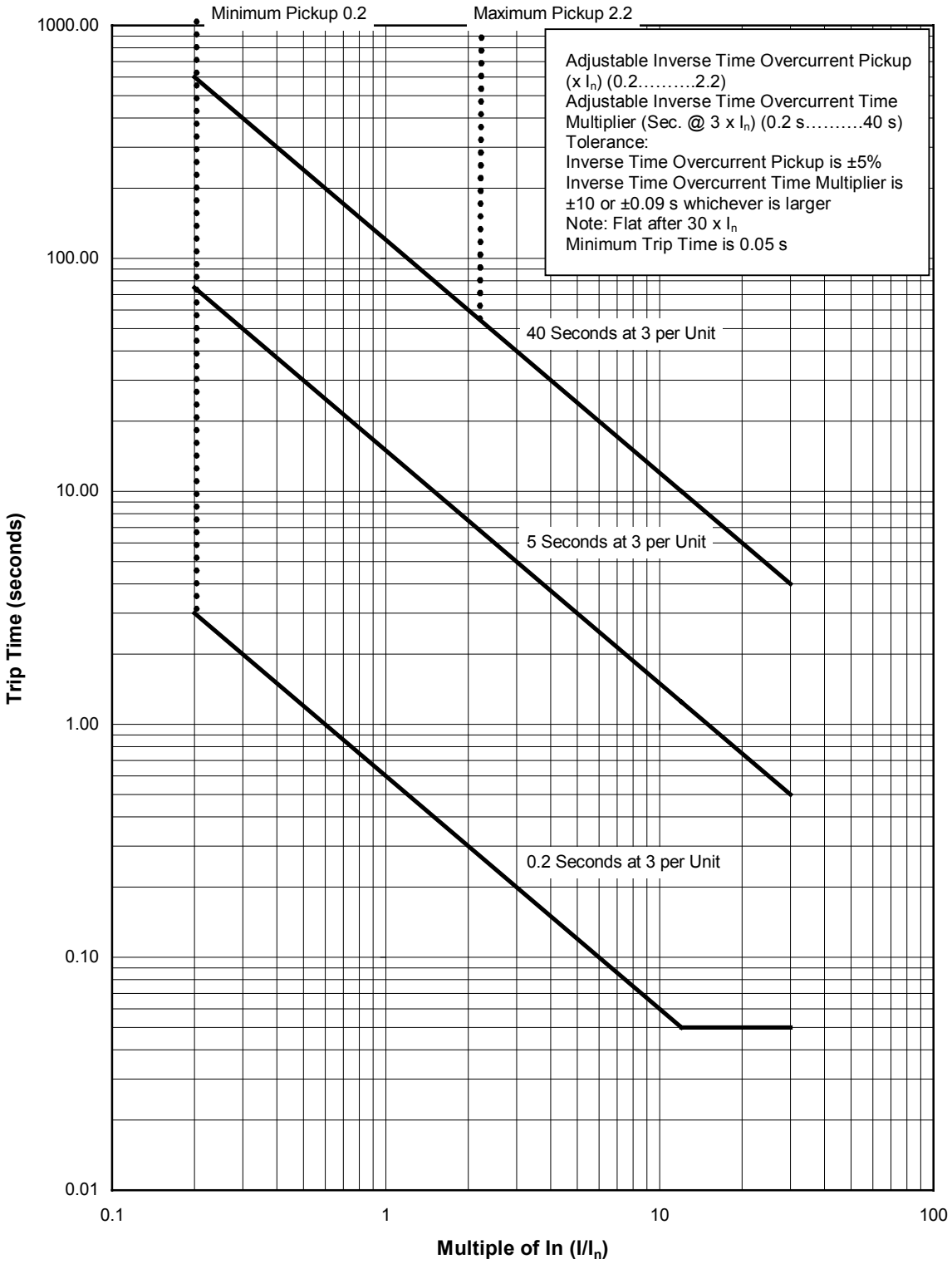

Figure 7-3b Inverse Time Overcurrent Phase, IT Curve (SC-5392-92B)
For DT 3100 & DT 3101 Users ONLY

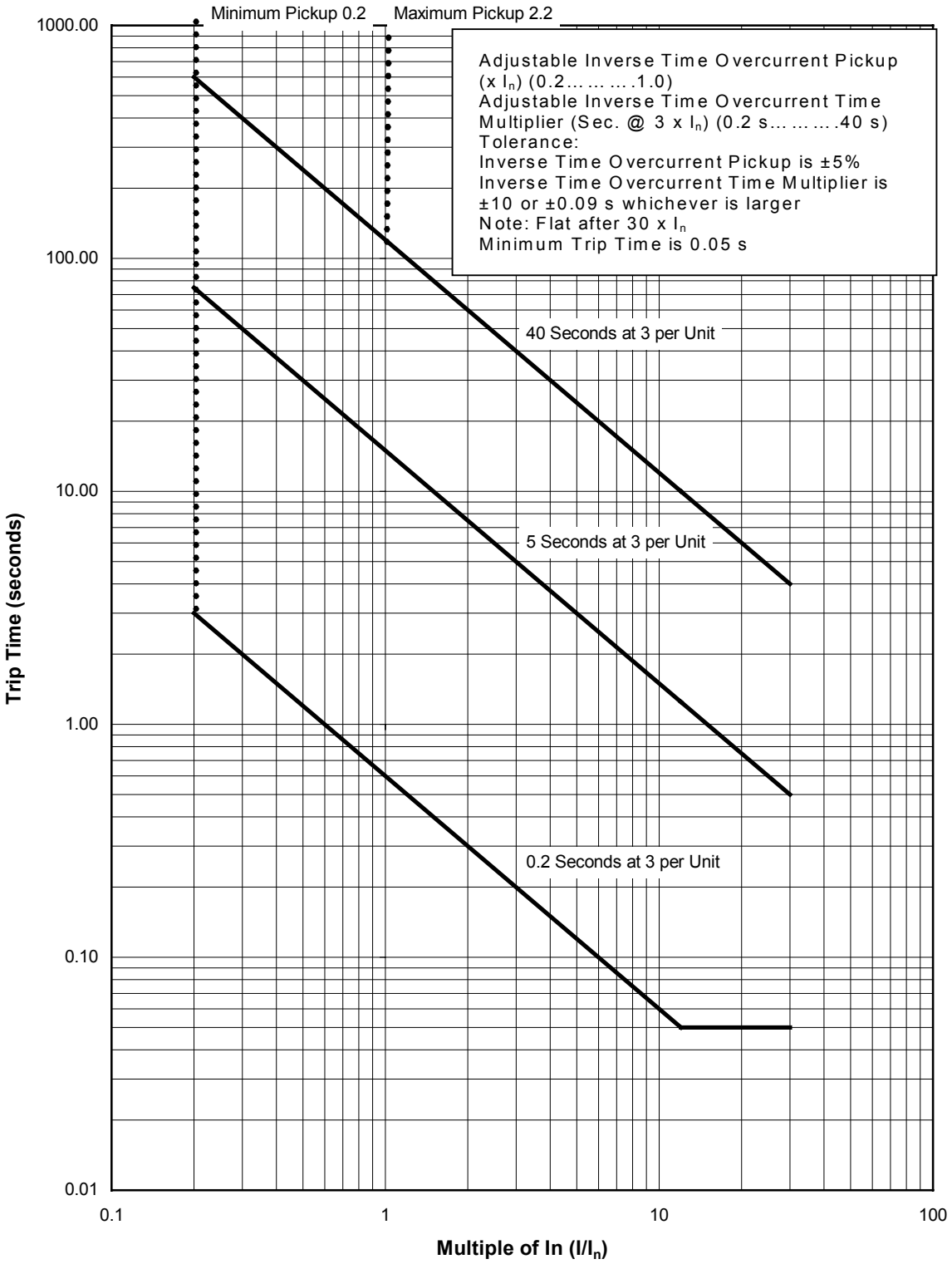

Figure 7-4a Inverse Time Overcurrent Phase, Flat Curves (SC-5393-92B)
DT 3100 & DT 3101 Users See Figure 7-4b

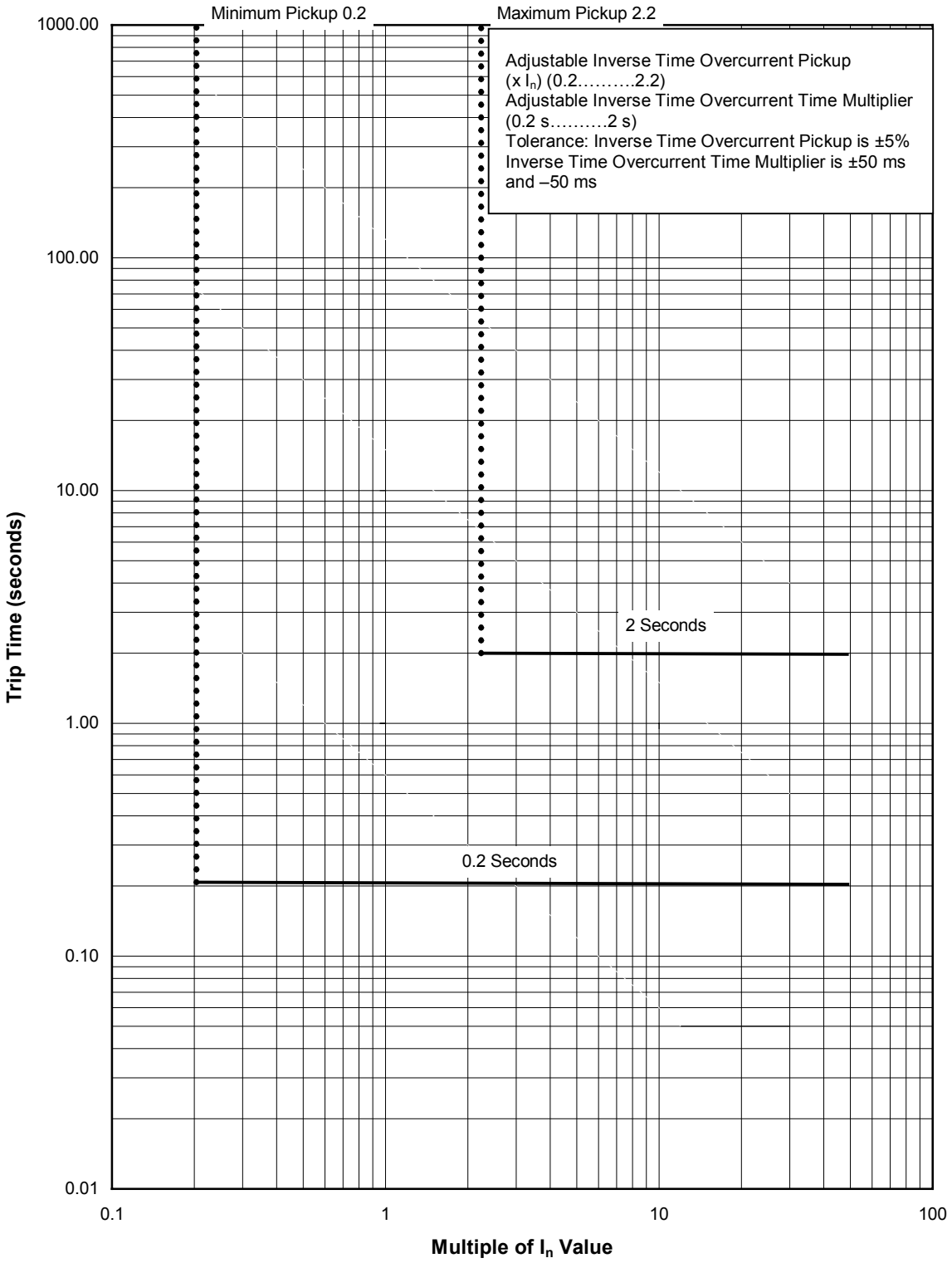

Figure 7-4b Inverse Time Overcurrent Phase, Flat Curves (SC-5393-92B)
For DT 3100 & DT 3101 Users Only

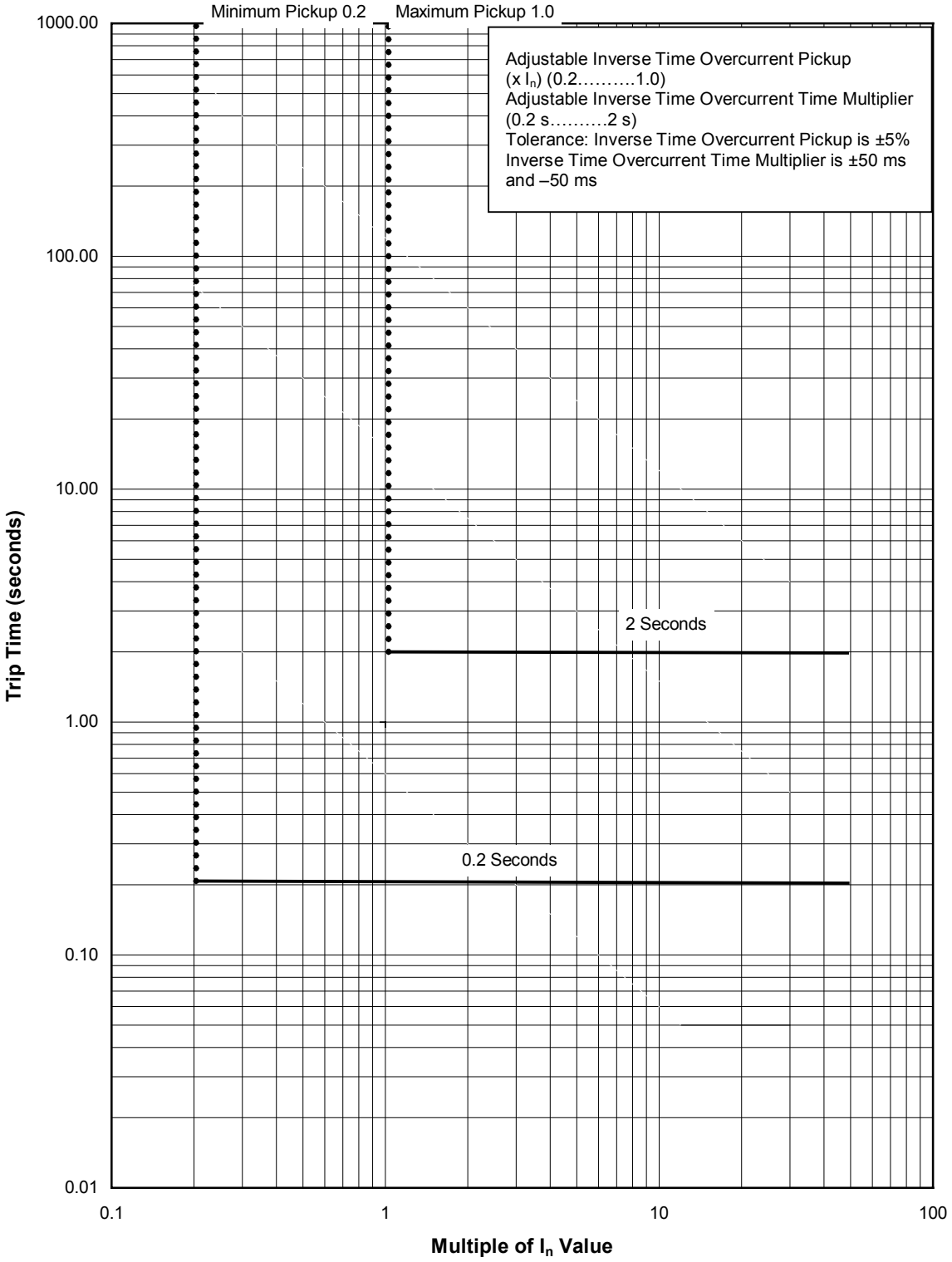

Figure 7-5 Short Delay Phase Curves (SC-5394-92B)

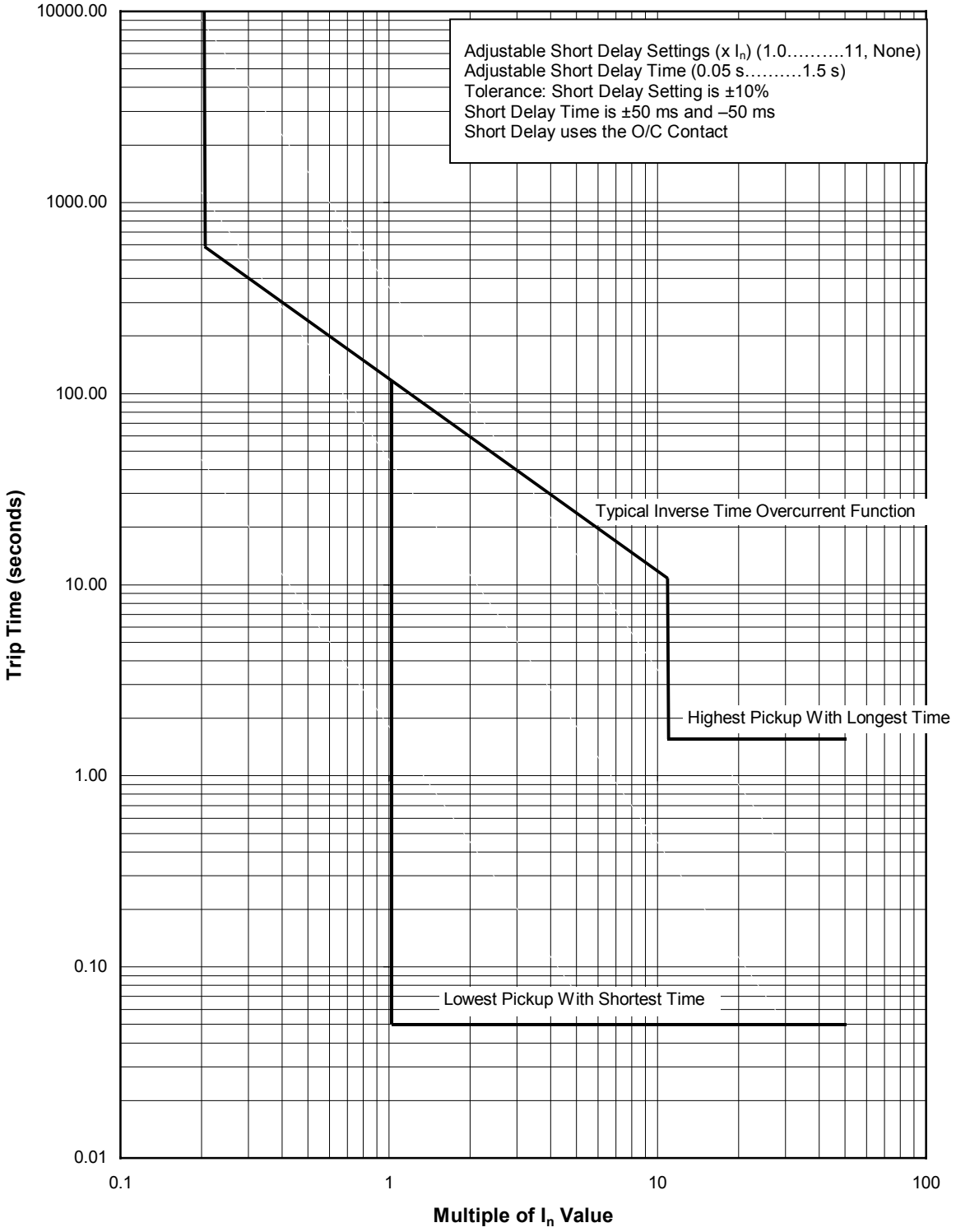

Figure 7-6 Inverse Time Overcurrent/Short Delay Curves (SC-5395-92B)

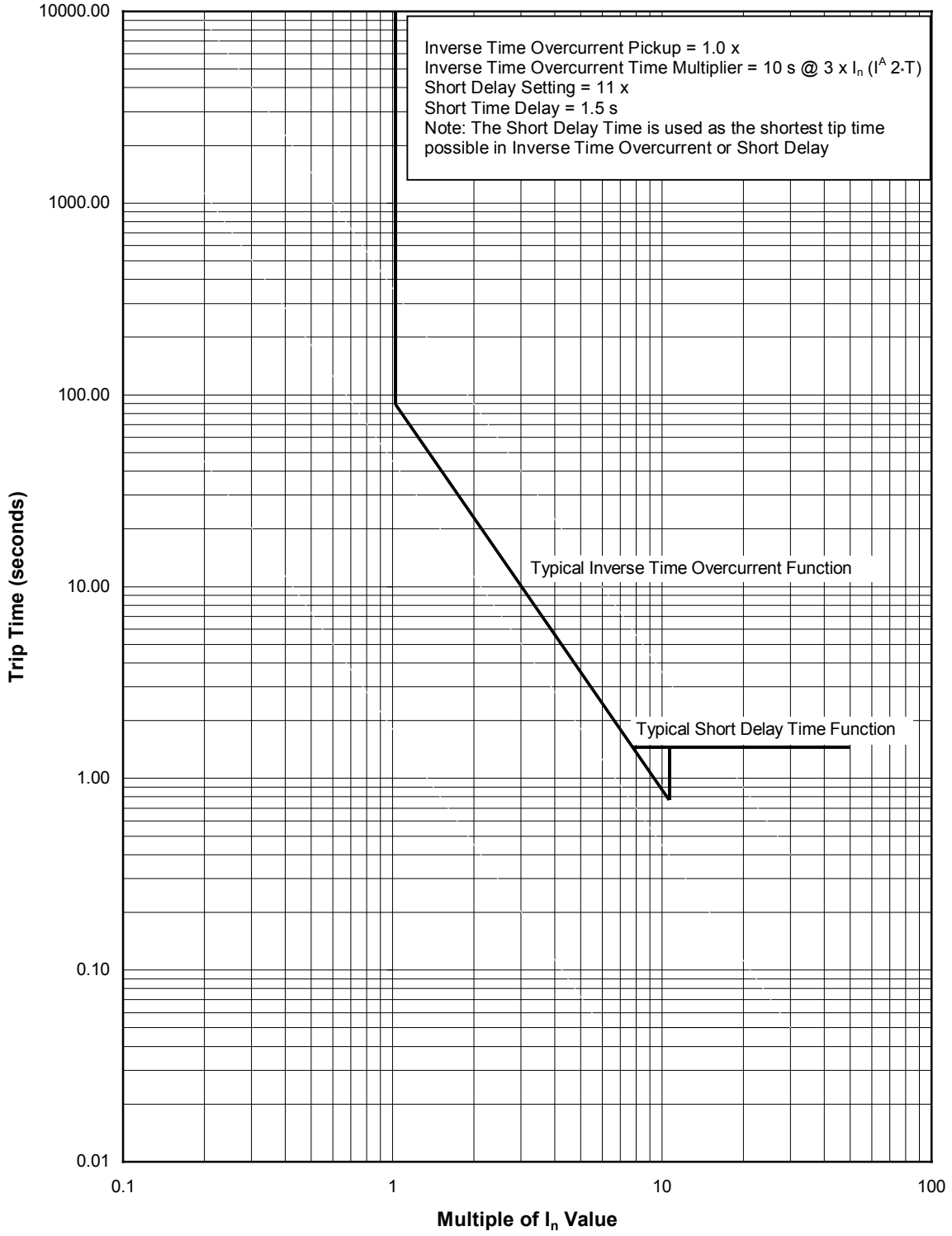

Figure 7-7 Instantaneous Curves (SC-5396-92B)

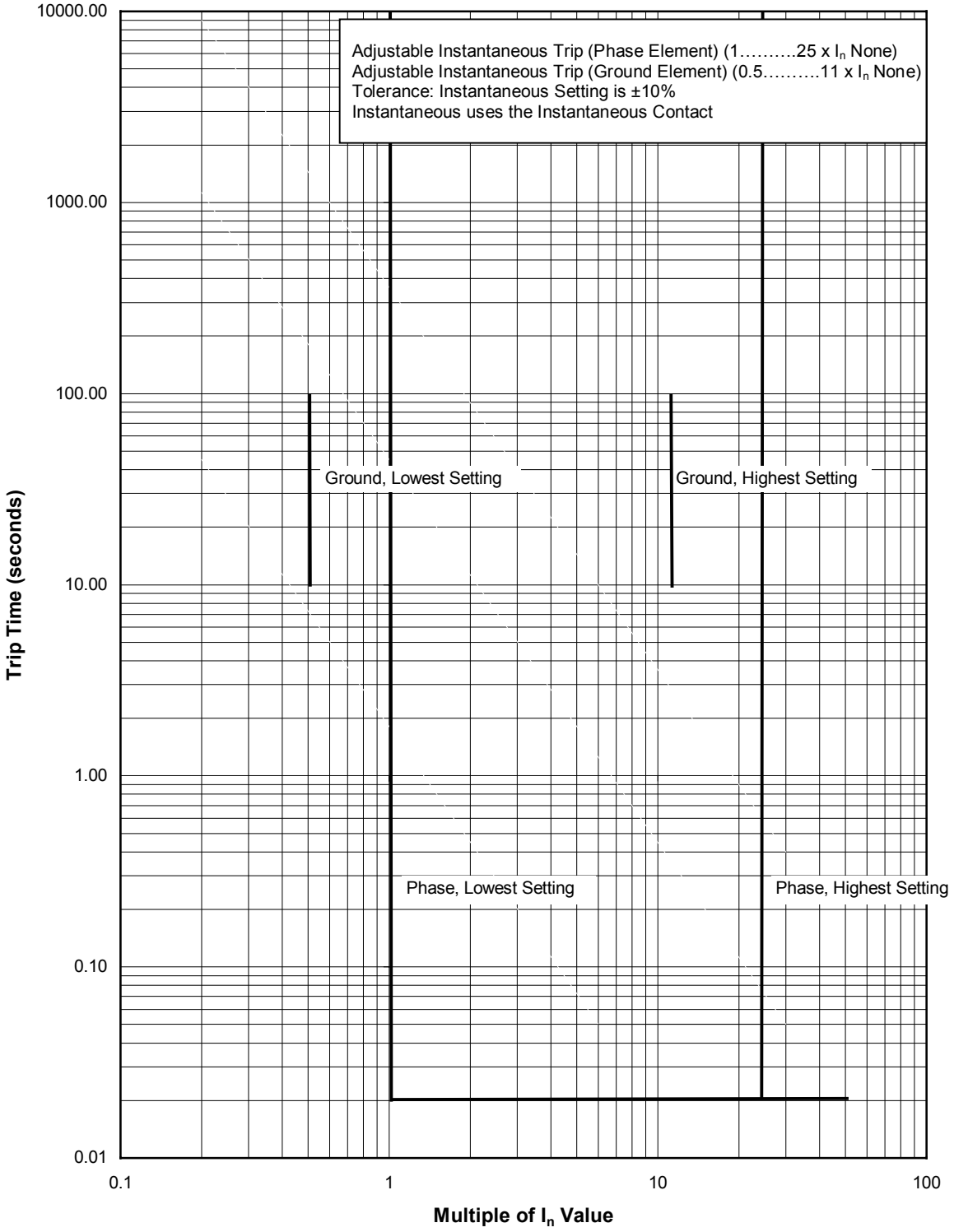

Figure 7-8 Inverse Time Overcurrent Ground I^4T Curve (SC-5399-92B)

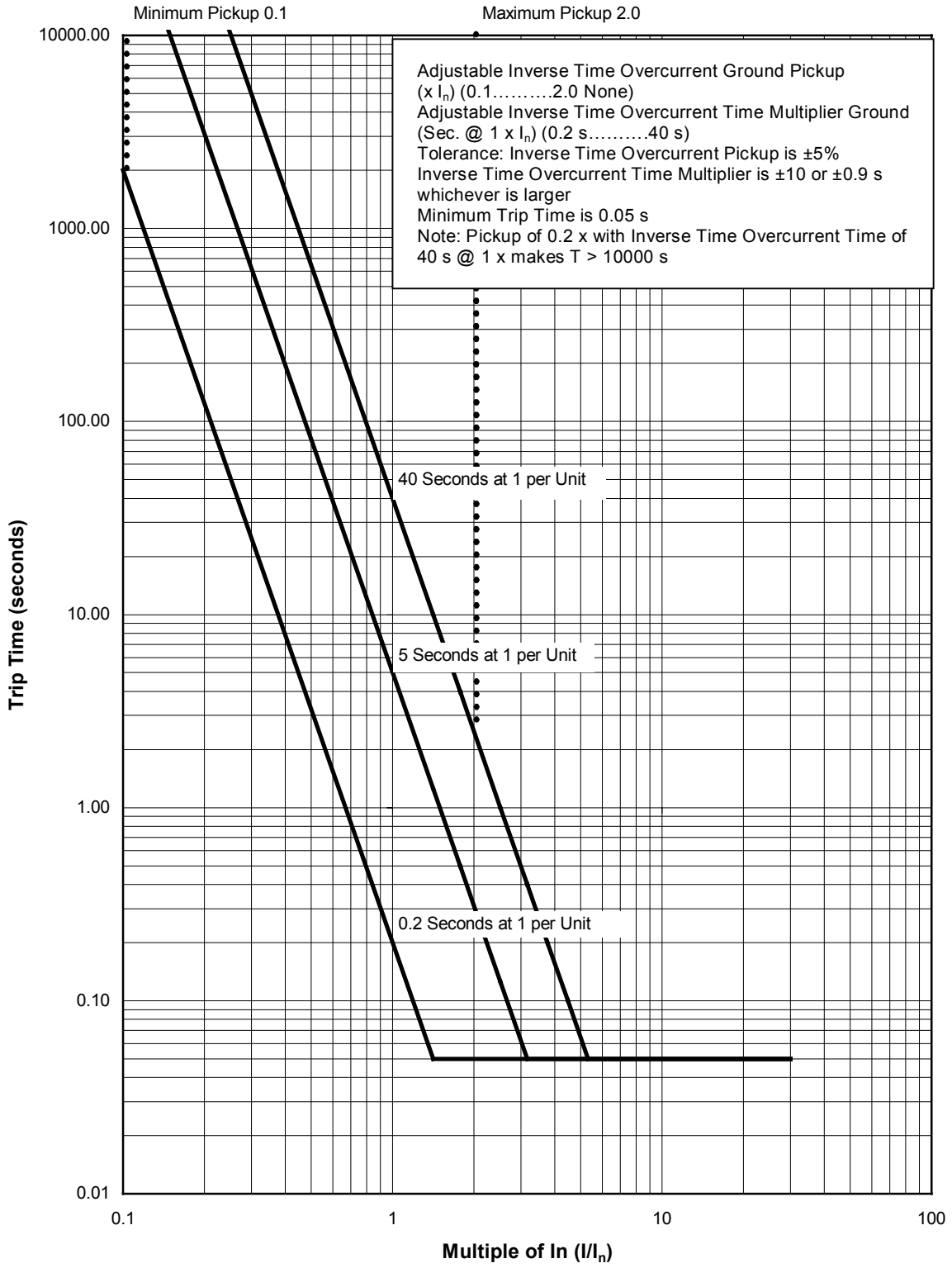

Figure 7-9 Inverse Time Overcurrent Ground I^2T Curve (SC-5400-92B)

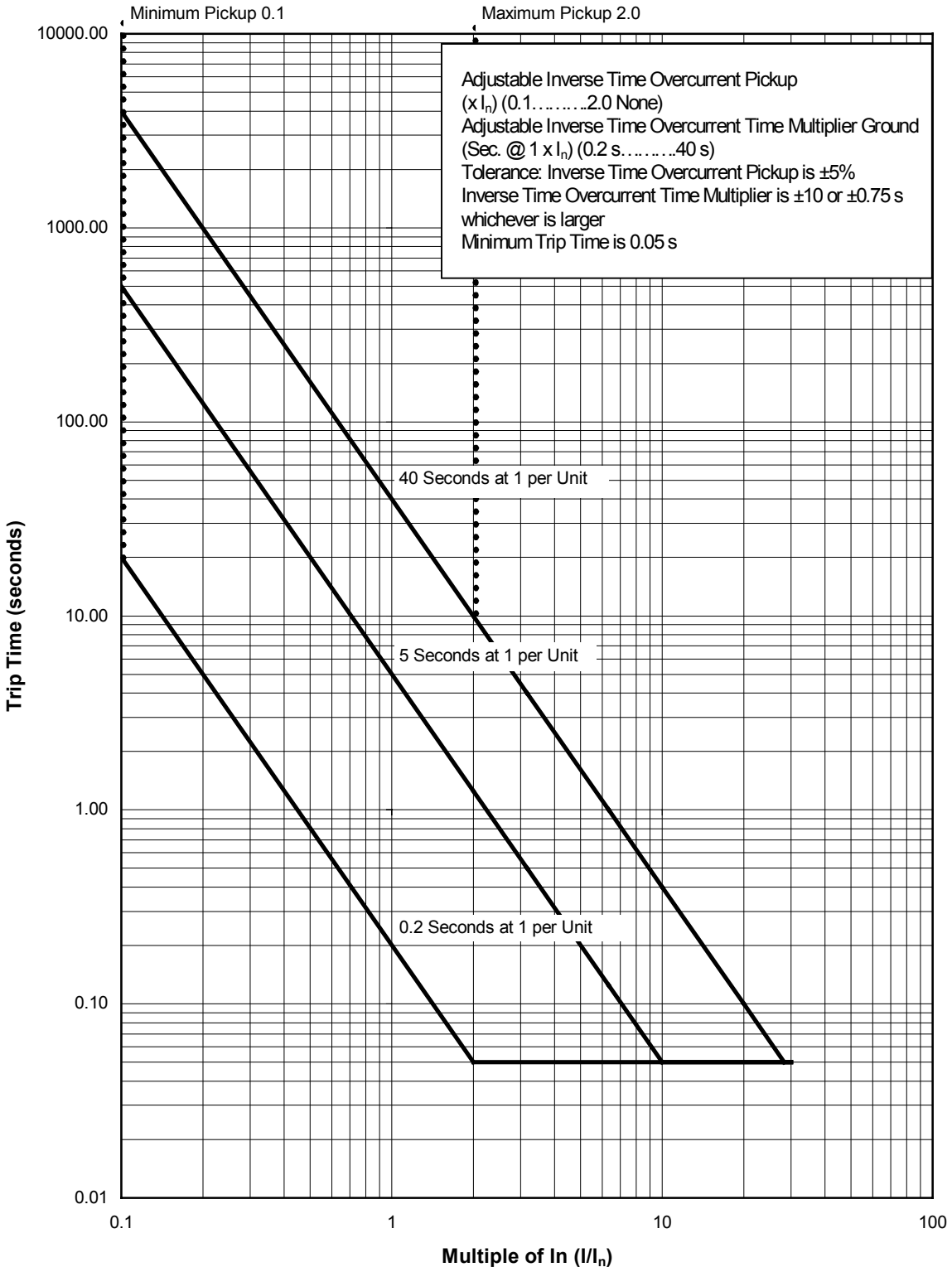

Figure 7-10 Inverse Time Overcurrent Ground IT Curve (SC-5401-92B)

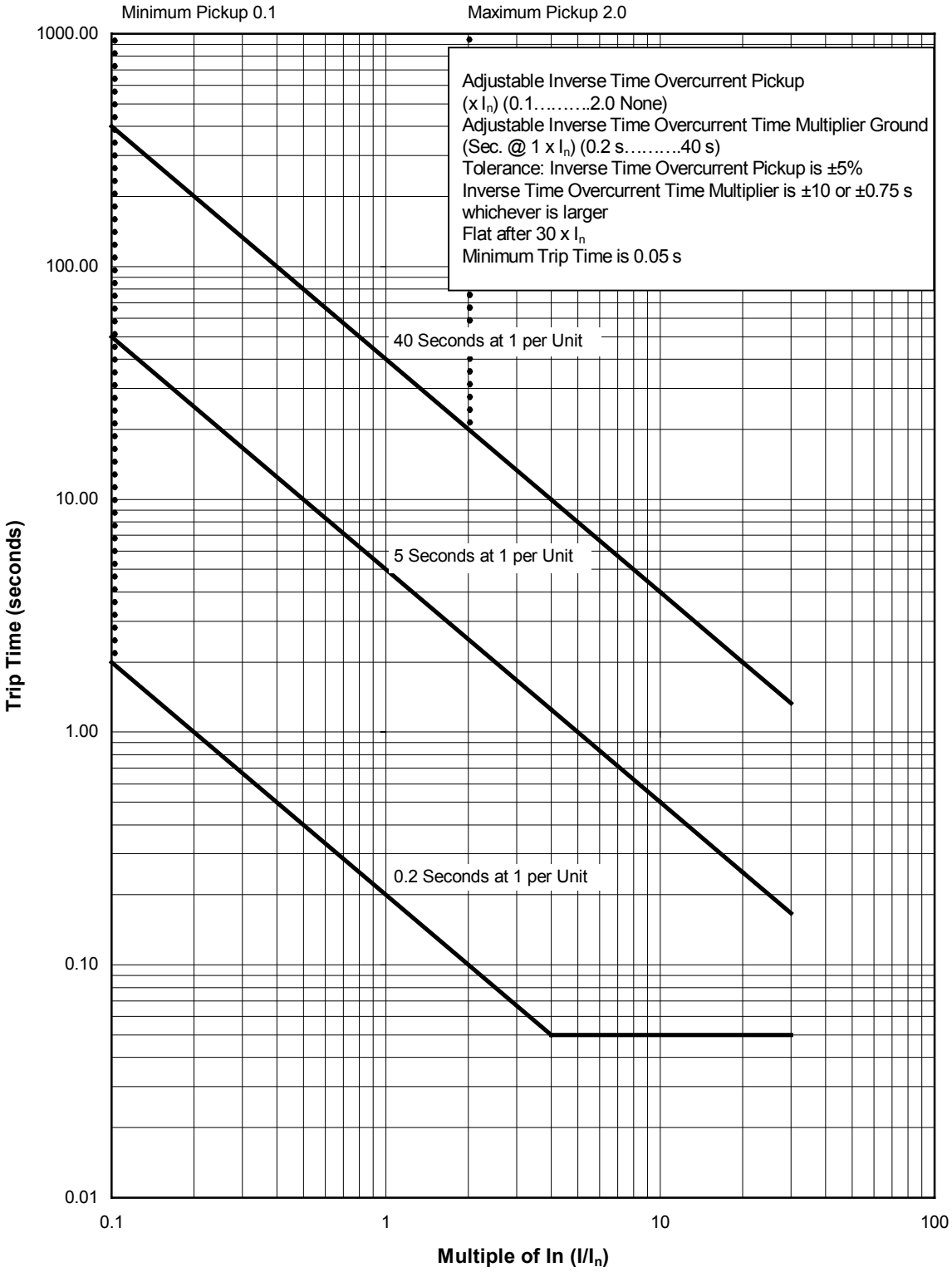

Figure 7-11 Inverse Time Overcurrent Ground, Flat Curves (SC-5402-92B)

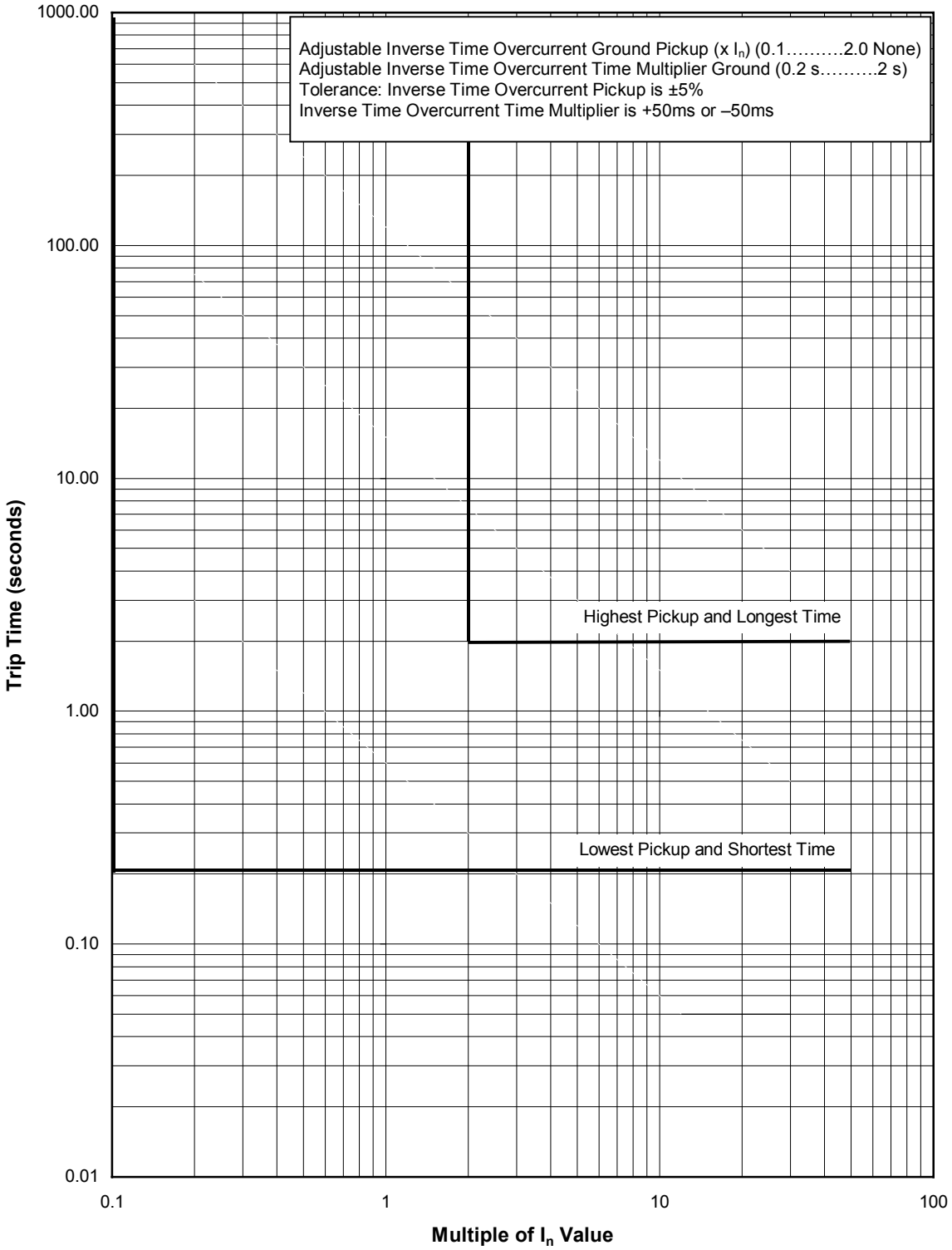

Figure 7-12 Short Delay Ground Curves (SC-5403-92B)

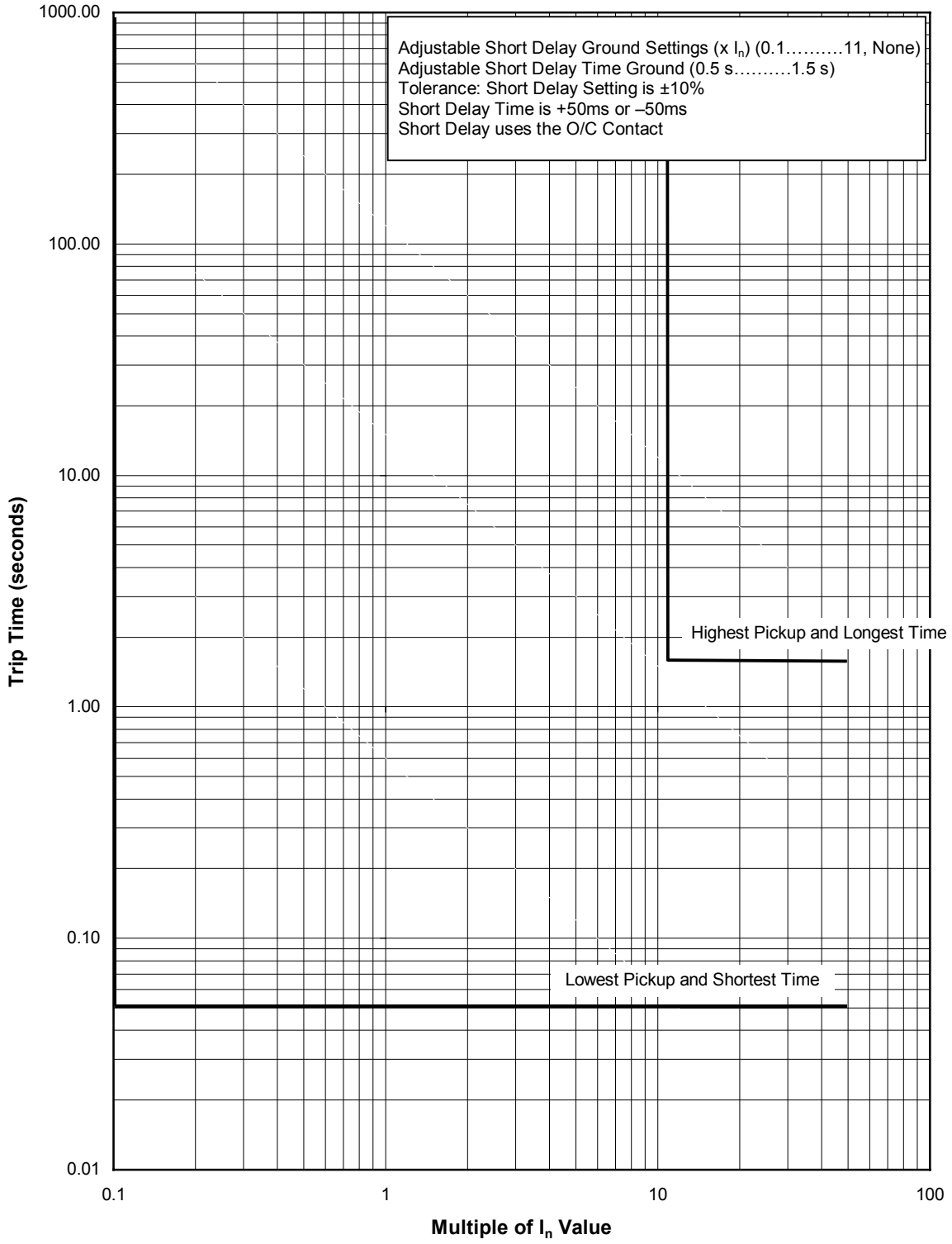

Figure 7-13 ANSI Moderately Inverse Curves (SC-6685-96)

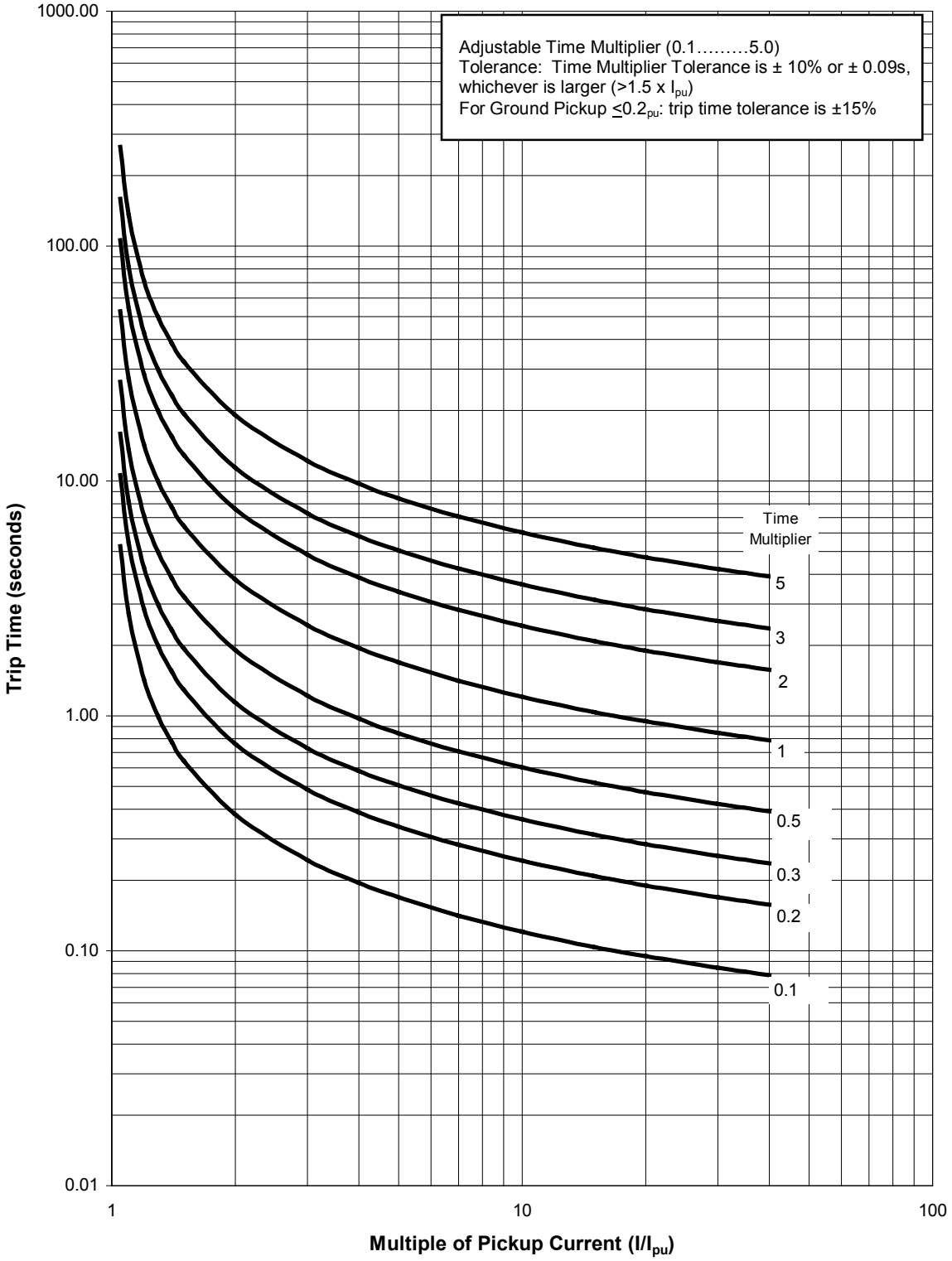

Figure 7-14 ANSI Very Inverse Curves (SC-6686-96)

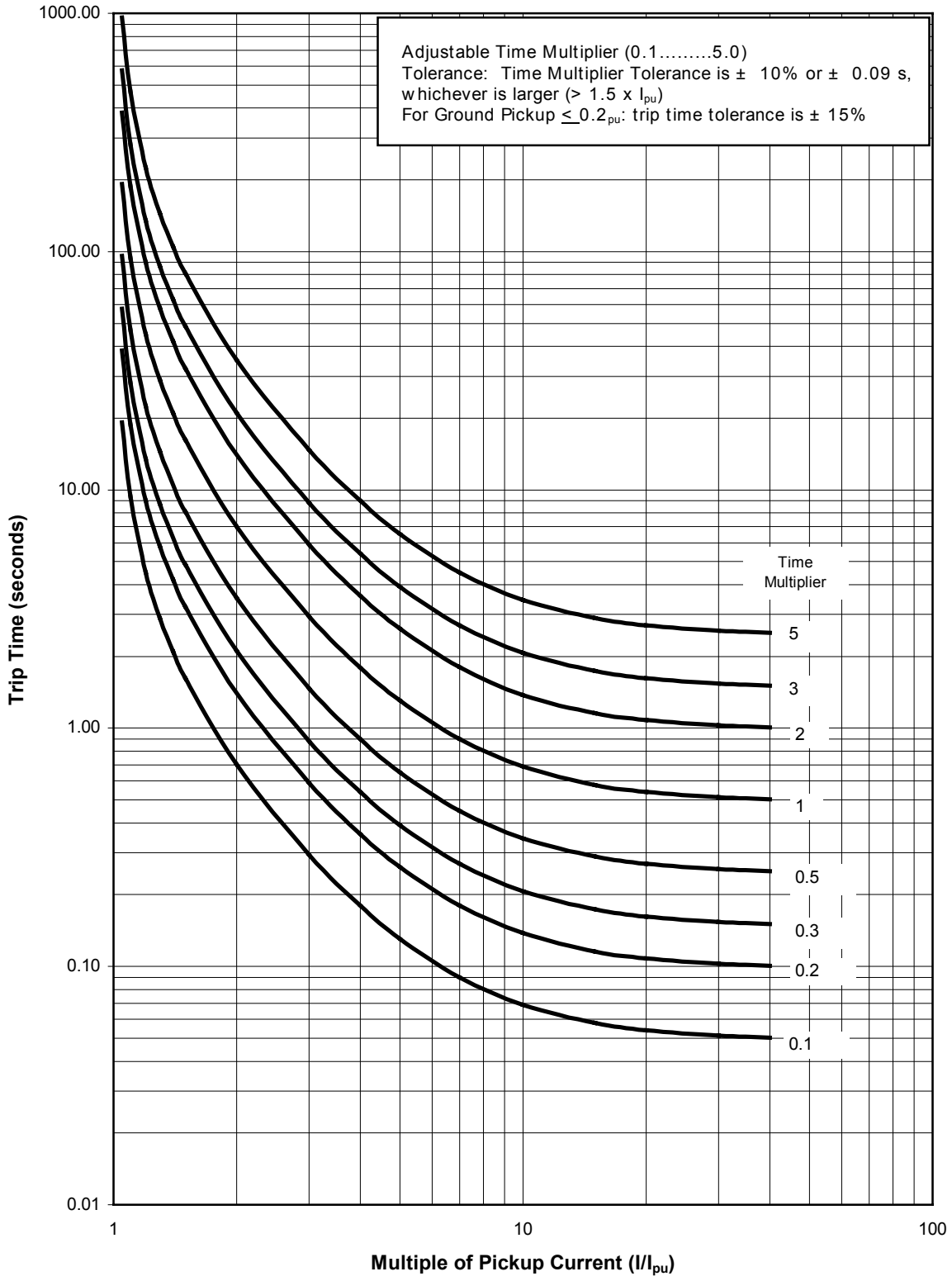

Figure 7-15 ANSI Extremely Inverse Curves (SC-6687-96)

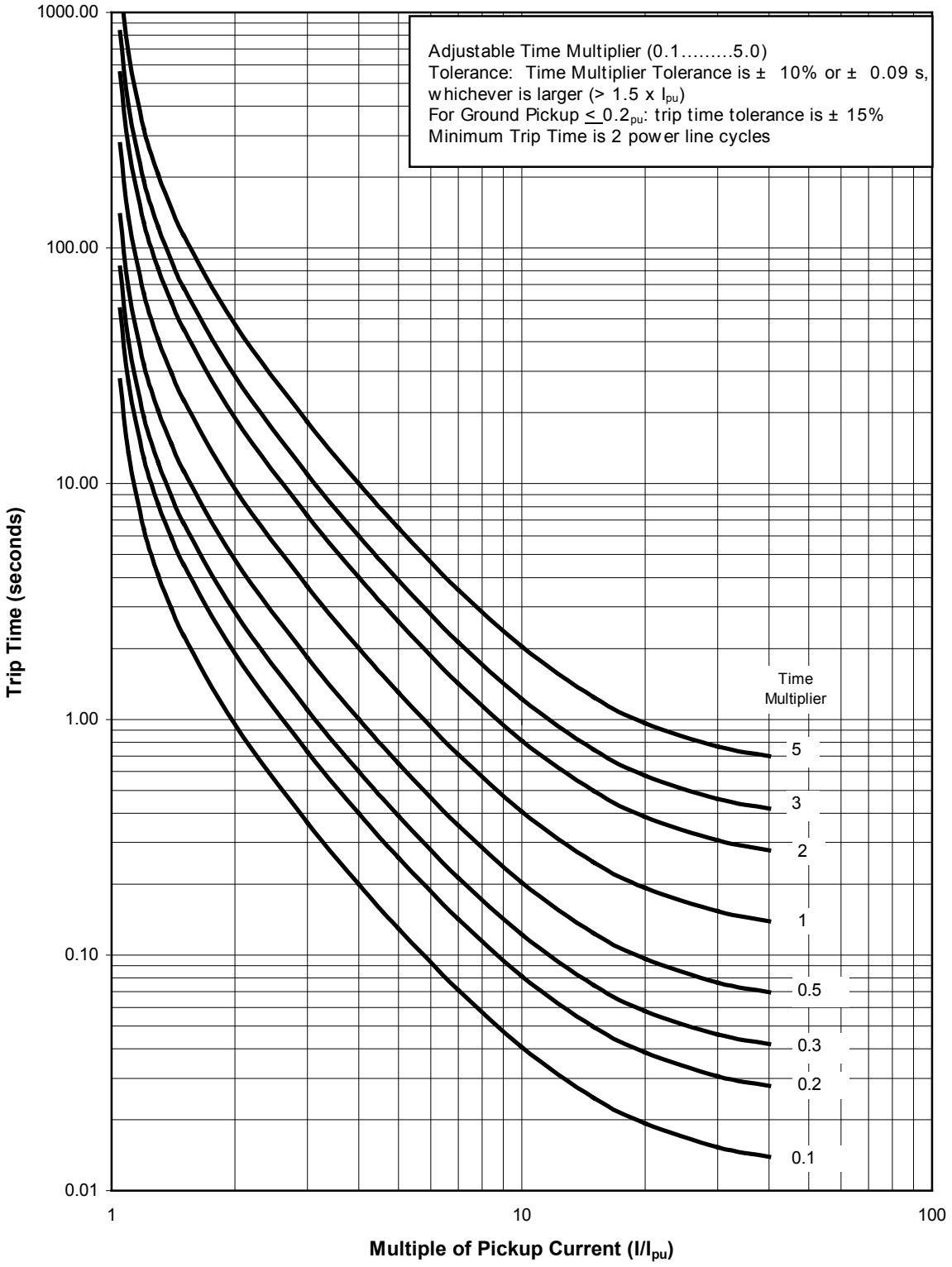

Figure 7-16 IEC-A Moderately Inverse Curves (SC-6688-96)

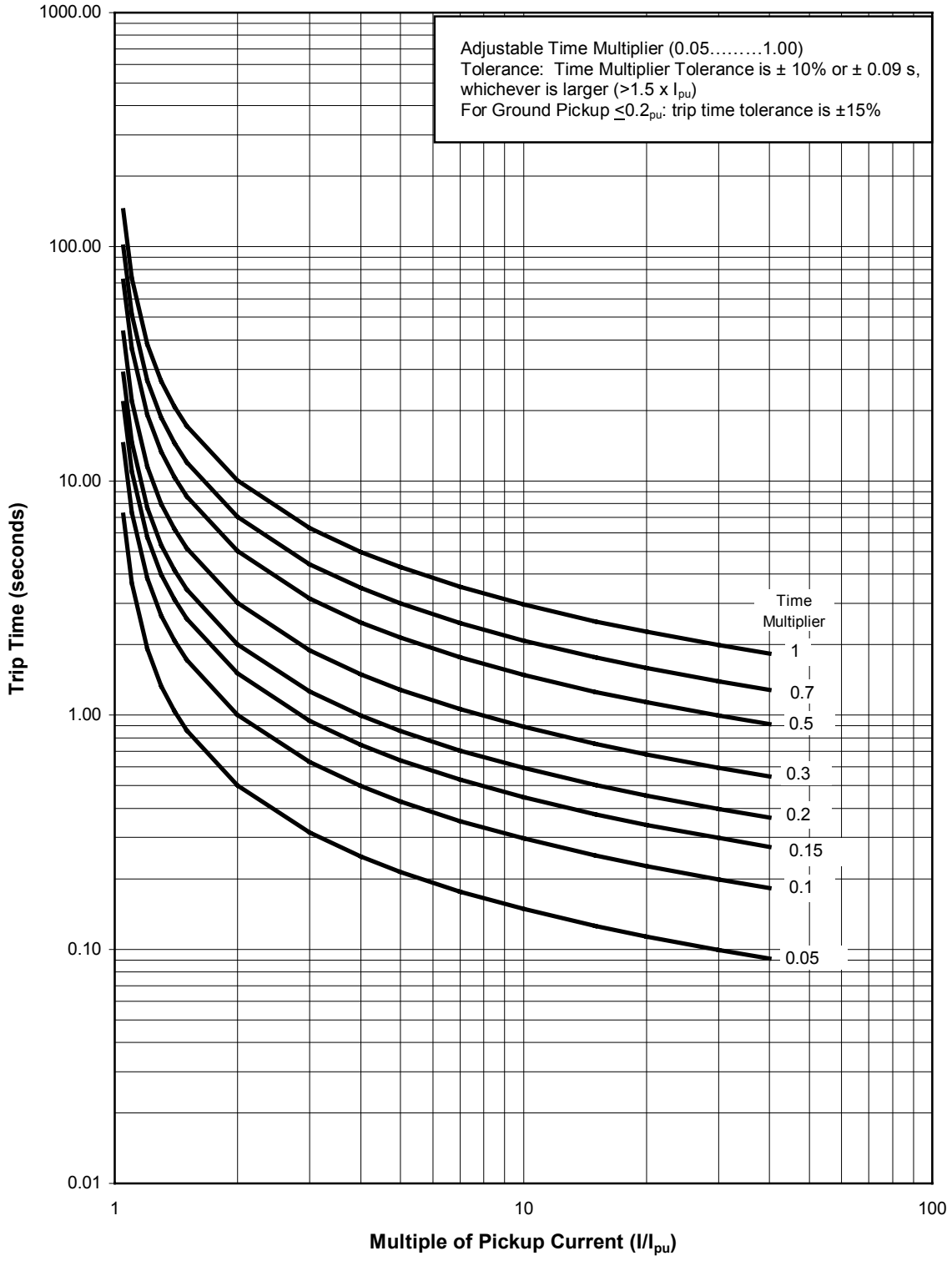

Figure 7-17 IEC-B Very Inverse Curves (SC-6689-96)

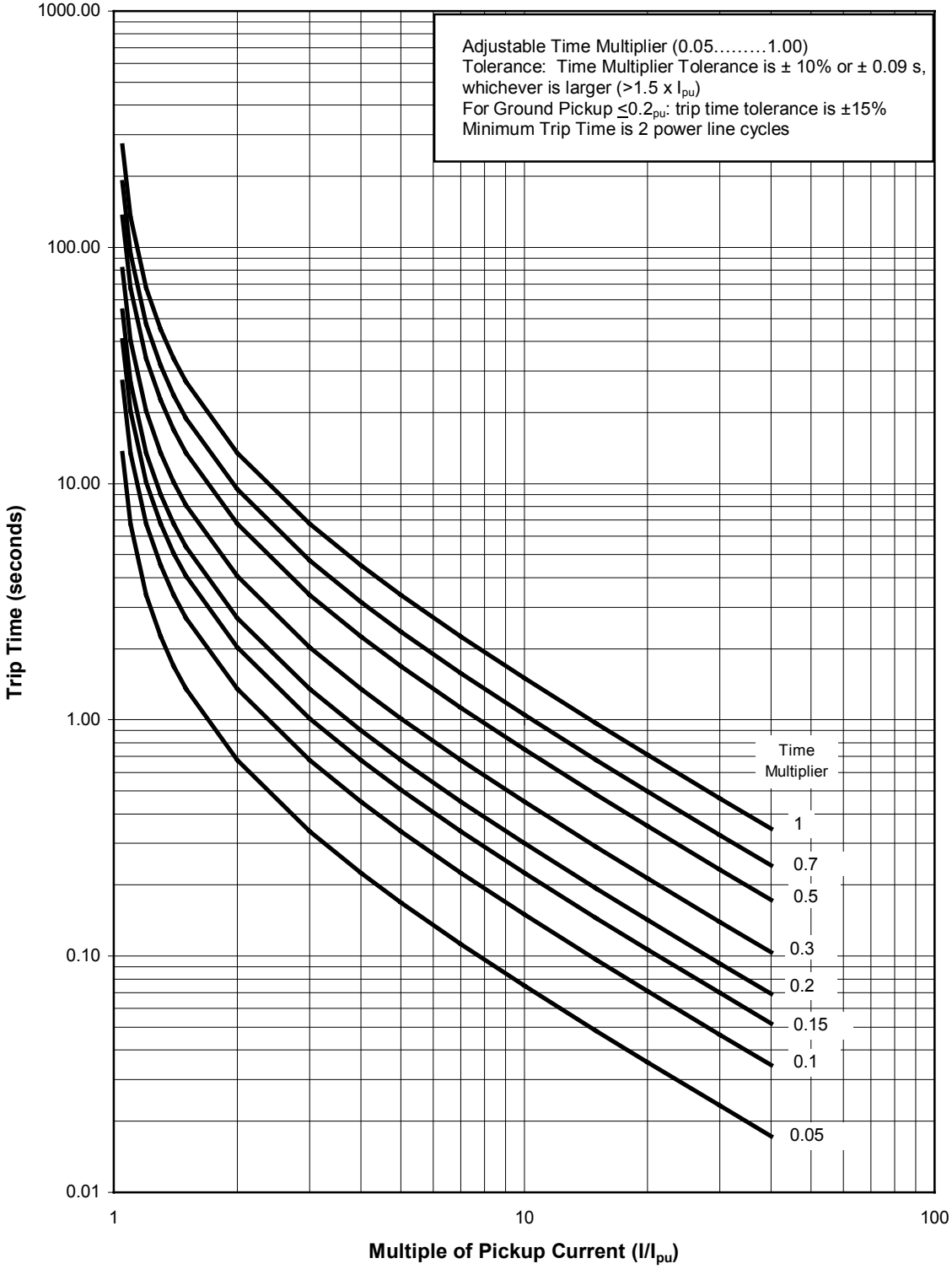

Figure 7-18 IEC-C Extremely Inverse Curves (SC-6690-96)

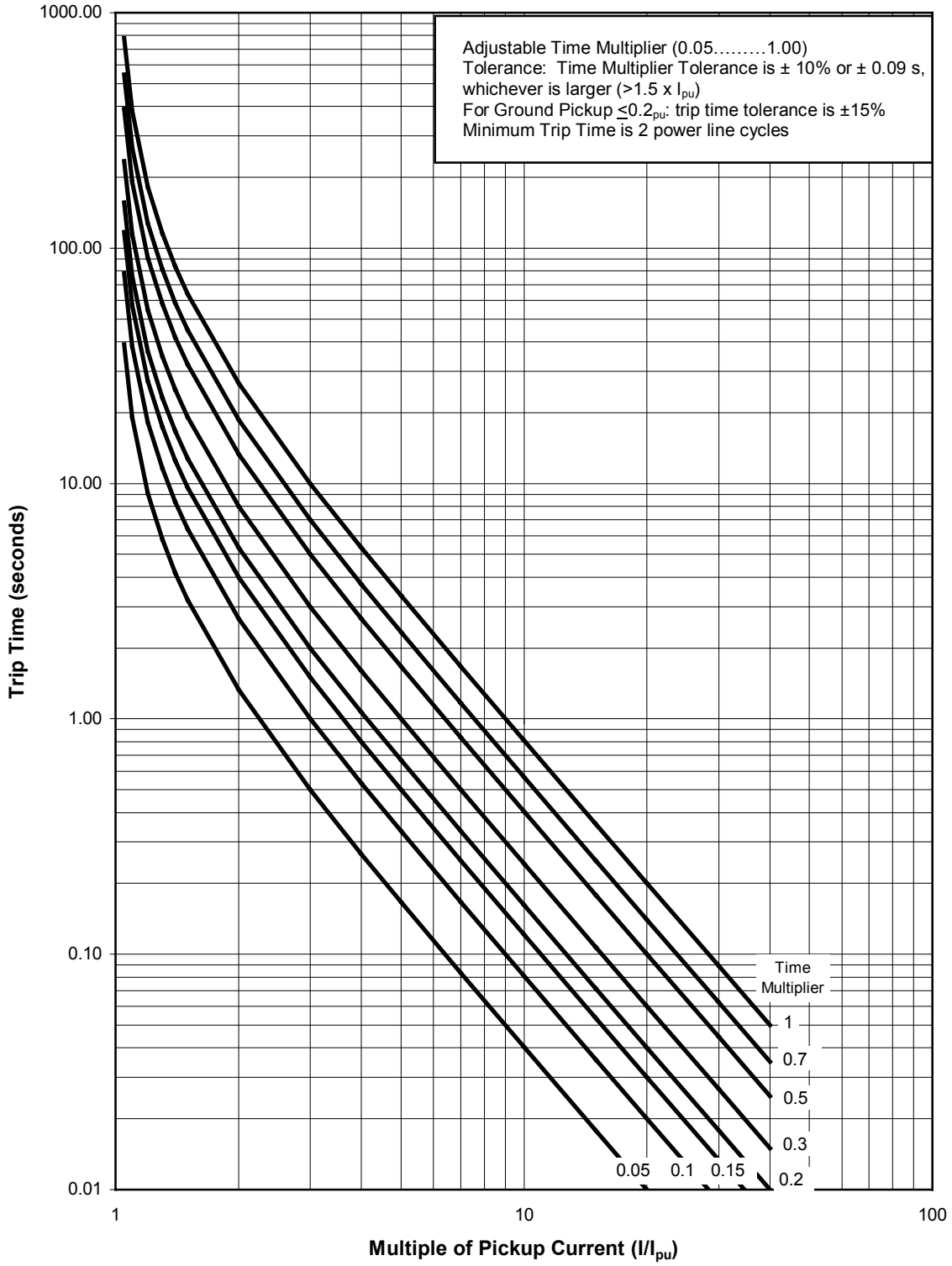

Figure 7-19 IEC-D Family Flat (SC-6691-96)

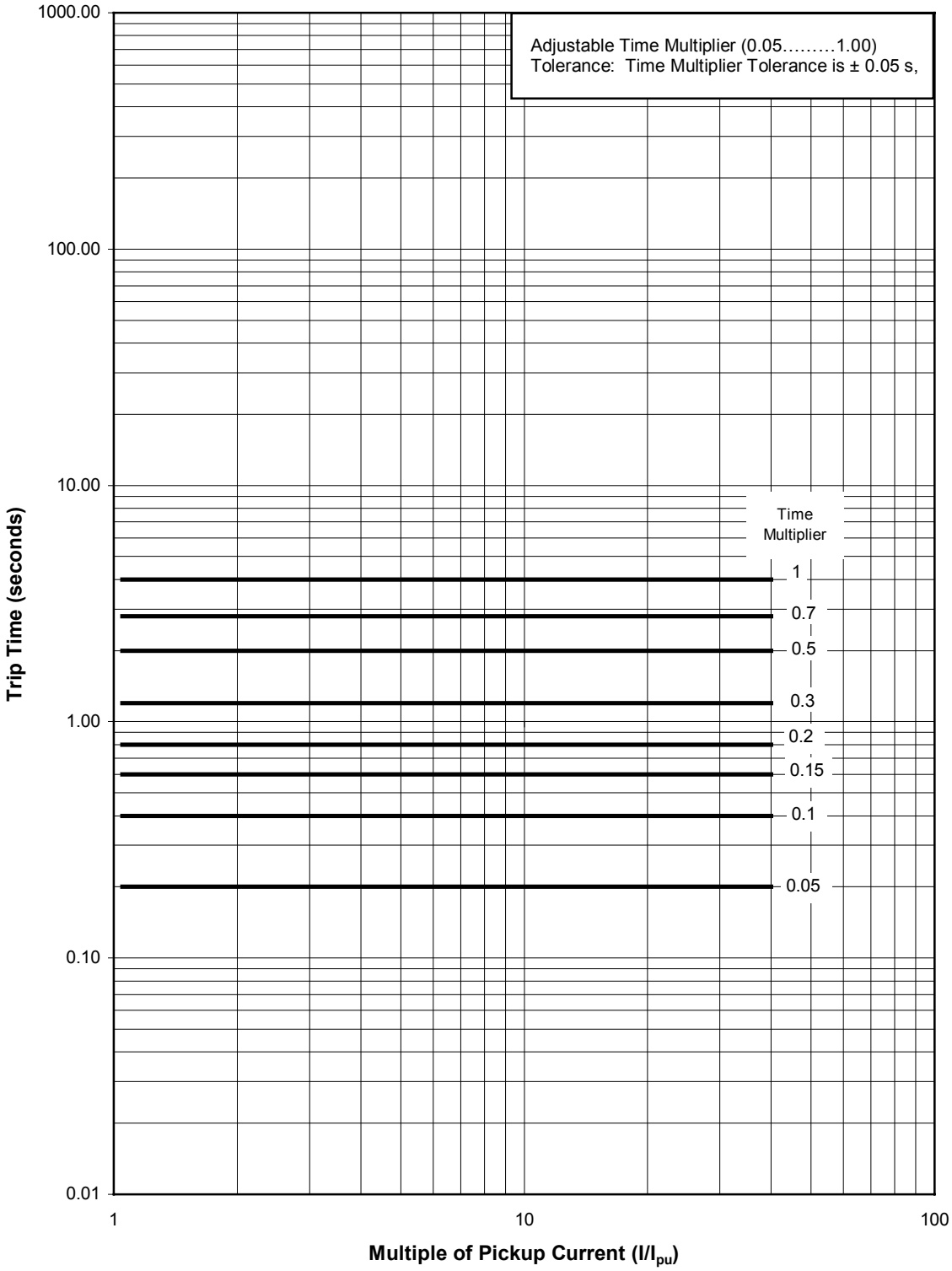

7-2 DIGITRIP 3000 CURVE EQUATIONS
Thermal Curve Equation

$$T = \frac{D * K^M}{\left(\frac{I}{I_n}\right)^M}$$

T = Trip Time

D = Time Multiplier (0.2 to 40) IT 1

I = Input Current I2T 2

M = Slope (0 = FLAT, 1 = IT, 2 = I2T, 4 = 14T) I4T 4

K = 3 for phase, 1 for ground FLAT 0

SLOPE	M
IT	1
I^2T	2
I^4T	4
FLAT	0

ANSI/IEC Curve Equation

$$T = D * \left(\frac{A}{\left(\frac{I}{I_{pu}}\right)^P - 1} + B \right)$$

Where:

I = Input Current

I_{pu} = Pickup Current Setting

D = Time Multiplier Setting

		P	A	B	
ANSI MOD	Moderately Inverse	0.02	0.0515	0.114	D = 0.1 - 5.0 step of 0.1
ANSI VERY	Very Inverse	2	19.61	0.491	
ANSI XTRM	Extremely Inverse	2	28.0	0.1217	
IEC-A	Normal Inverse	0.02	0.14	0	D = 0.05 to 1.0 step of 0.05
IEC-B	Very Inverse	1	13.5	0	
IEC-C	Extremely Inverse	2	80	0	
IEC-D	Definite Time		0	4	

APPENDIX A

A1.0 INTRODUCTION

Appendix A describes the Drawout Case option for the Digitrip 3000 Protective Relay. The table below (A-1) lists the Drawout Case versions.

Table A-1 Ordering Information

NEW Style #	OLD Style #	Catalog #	Description
4D13124G21	4D13124G11	DT3001	Protective Relay – High range PS, Std. Firmware, Drawout case
66D2001G21	66D2001G11	DT3001-IC	DT3001 Protective Relay - Inner Case Only
66D2005G21	66D2005G11	DT3001-OC	DT3001 - Outer Case Only
4D13124G24	4D13124G04	DT3031	Protective Relay – low range PS, Std. Firmware, Drawout case
66D2001G24	66D2001G14	DT3031-IC	DT3031 Protective Relay - Inner Case Only
66D2005G24	66D2005G14	DT3031-OC	DT3031 Outer Case Only

A2.0 GENERAL DESCRIPTION

The purpose of the DT3001 is to allow the device to be removed from gear, using a "quick disconnect" type strategy. The Digitrip 3001 Drawout Relay maintains the same electrical and operating specifications as the standard Digitrip 3000 with the addition of the following Drawout connector specifications.

TABLE A-2 ADDITIONAL SPECIFICATIONS

Relay Make/Break Rating	10A @ 240Vac nominal 0.25A @ 250Vdc break maximum
Terminal Wire Gauge	No. 14 to 10 AWG
Screw Torque Requirements	18 inch-pounds
Meets ANSI C37.90.2 (1995) to 35 V/M	

The Drawout Outer Case consists of two assemblies, a molded plastic outer flange with "quick release" actuators and locking mechanism, and the aluminum housing with terminal blocks.

The Drawout terminal block features self-shorting or short-before-break contacts, for Ct connections that maintain circuit continuity when the device is removed. These self-shorting contacts will prevent damaging voltages from existing across the current transformer windings.

The terminal blocks feature a 2-stage disconnect operation. Removal of the DT3001 Inner Chassis will disconnect the trip circuits and short the Ct secondary before the unit control power is disconnected. Upon insertion of the inner chassis, the control power connections are made before the trip circuits are activated. ***This feature provides added security against false tripping.***

Fig. A-1 Digitrip 3001 Drawout Relay

A3.0 INSTALLATION

NOTE: Please refer to the following section if you are using the Digitrip 3001 Drawout Relay.

A3.1 PANEL PREPARATION

When mounting the Drawout Case in a panel, it is necessary to prepare a cutout for the device per Fig. 5-1 Cutout Dimensions. If a standard IQ cutout exists, no additional panel setup is required; the Drawout will mount in the existing hole cutouts.

A3.2 DIGITRIP 3001 DRAWOUT RELAY PARTS LIST

BEFORE MOUNTING THE DRAWOUT RELAY, REVIEW the table below for ALL OF THE INCLUDED PARTS:

TABLE A-3 DT3001 DRAWOUT RELAY PARTS LIST

Description	Quantity
Digitrip 3001 Drawout Inner Chassis	1
Digitrip 3001 Drawout Enclosure	1
Outer Flange	1
Mounting Hardware — #10-32 nuts & lock washers	6 each
Digitrip 3001 Instruction Book — I.B. 17555	1
Drawout Relay Addendum to I.B. 17555	1

A3.3 MOUNTING THE DRAWOUT OUTER CASE

- The DT3001 Drawout Relay mounts in the exact same mounting holes as a standard DT3000.
- Remove the Drawout Inner Chassis from the outer case.
- Refer to Figure A-3. Place the outer case flush against the backside of the panel so that the case studs project through their respective holes.
- The plastic outer flange is seated on the front of the panel and is attached to the top, center and bottom studs that protrude through the panel.

- Use the #10-32 hex nuts and lock washers included with the relay, to mount the unit on the panel.

A4.0 WIRING AND SETUP

CAUTION

ENSURE THAT THE INCOMING AC POWER SOURCES ARE DISCONNECTED BEFORE PERFORMING ANY WORK ON THE DIGITRIP 3001 PROTECTIVE RELAY OR ITS ASSOCIATED EQUIPMENT. FAILURE TO OBSERVE THIS PRACTICE COULD RESULT IN EQUIPMENT DAMAGE, SERIOUS INJURY AND/OR DEATH.

Refer to Figures A-4, A-5, A-6, and A-7 for the DT3001 typical wiring diagrams. Note the following:

- Direct wire connections to the terminal blocks must be sizes #14 AWG to #10 AWG. The appropriate sized spade and ring lugs can also be used to accommodate the wires.
- All contacts are shown in the de-energized position.

NOTE: The Protection Off Alarm Relay is energized when control power is applied and the DT3001 is operating properly. To obtain a contact that closes when protection is lost, use terminals 48 & 50. For a contact that opens when protection is lost, use terminals 46 & 48.

- The Digitrip 3001 comes with the zone interlocking jumpers installed (terminals 13 to 14 and 15 to 16). Leave these jumpers in place if zone selective interlocking is not used. See Section A-5 below for more information on this topic.
- The INCOM communications LED can be seen through a hole in the outer chassis.

NOTE: All wiring must conform to applicable federal, state, and local codes.

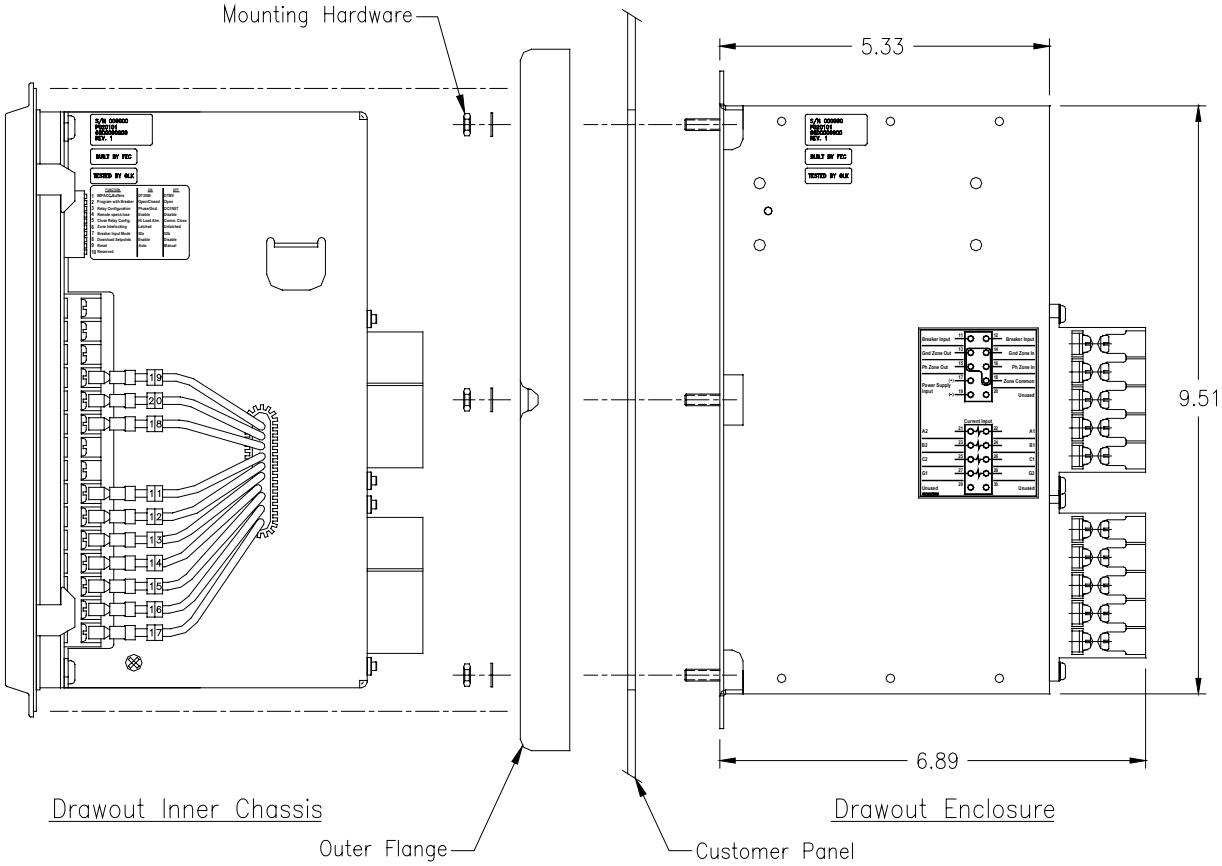

Fig. A-2 DT3001 Panel Mounting

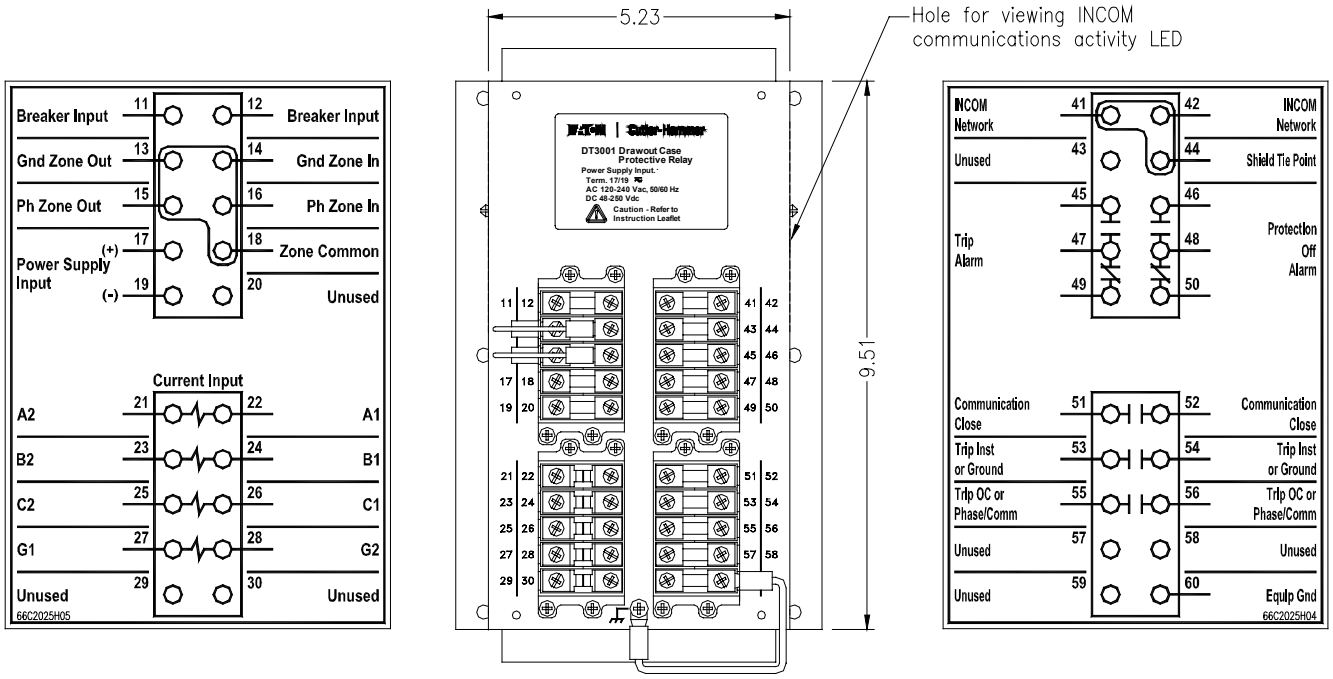

Fig. A-3 Rear View of DT3001 Drawout Enclosure

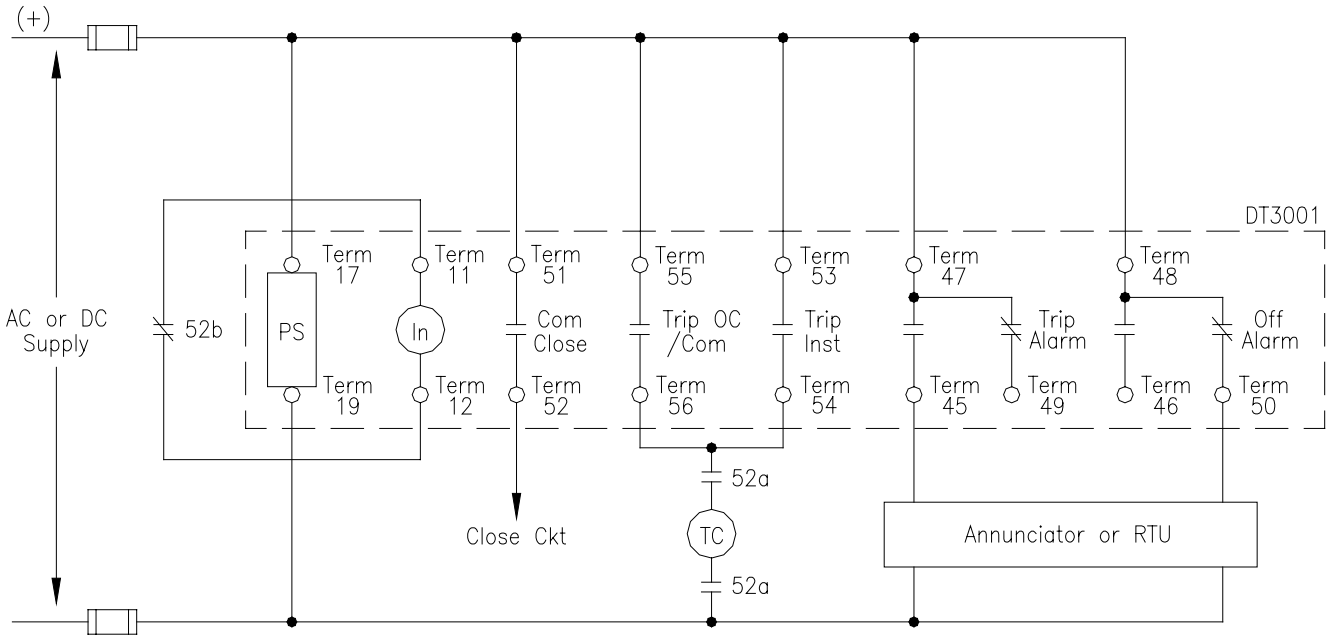

FIG. A-4 DIGITRIP 3001 TYPICAL AC OR DC SCHEMATIC

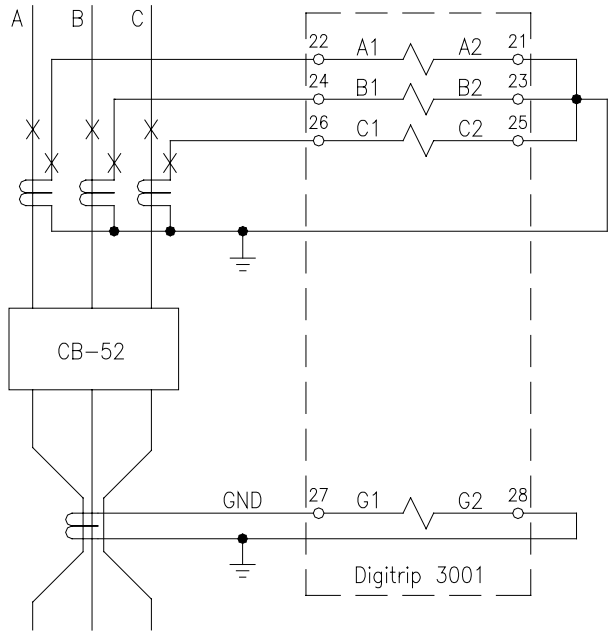

FIG. A-5 DIGITRIP 3001 TYPICAL AC EXTERNAL CURRENT CONNECTION WITH ZERO SEQUENCE GROUND CT

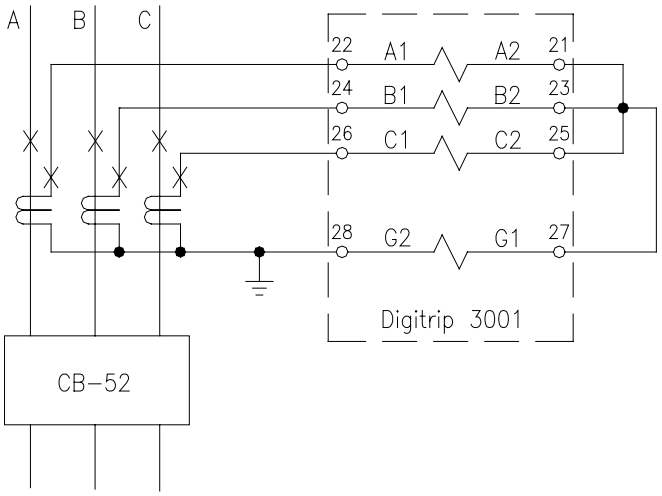

FIG. A-6 DIGITRIP 3001 TYPICAL RESIDUAL GROUND CONNECTION

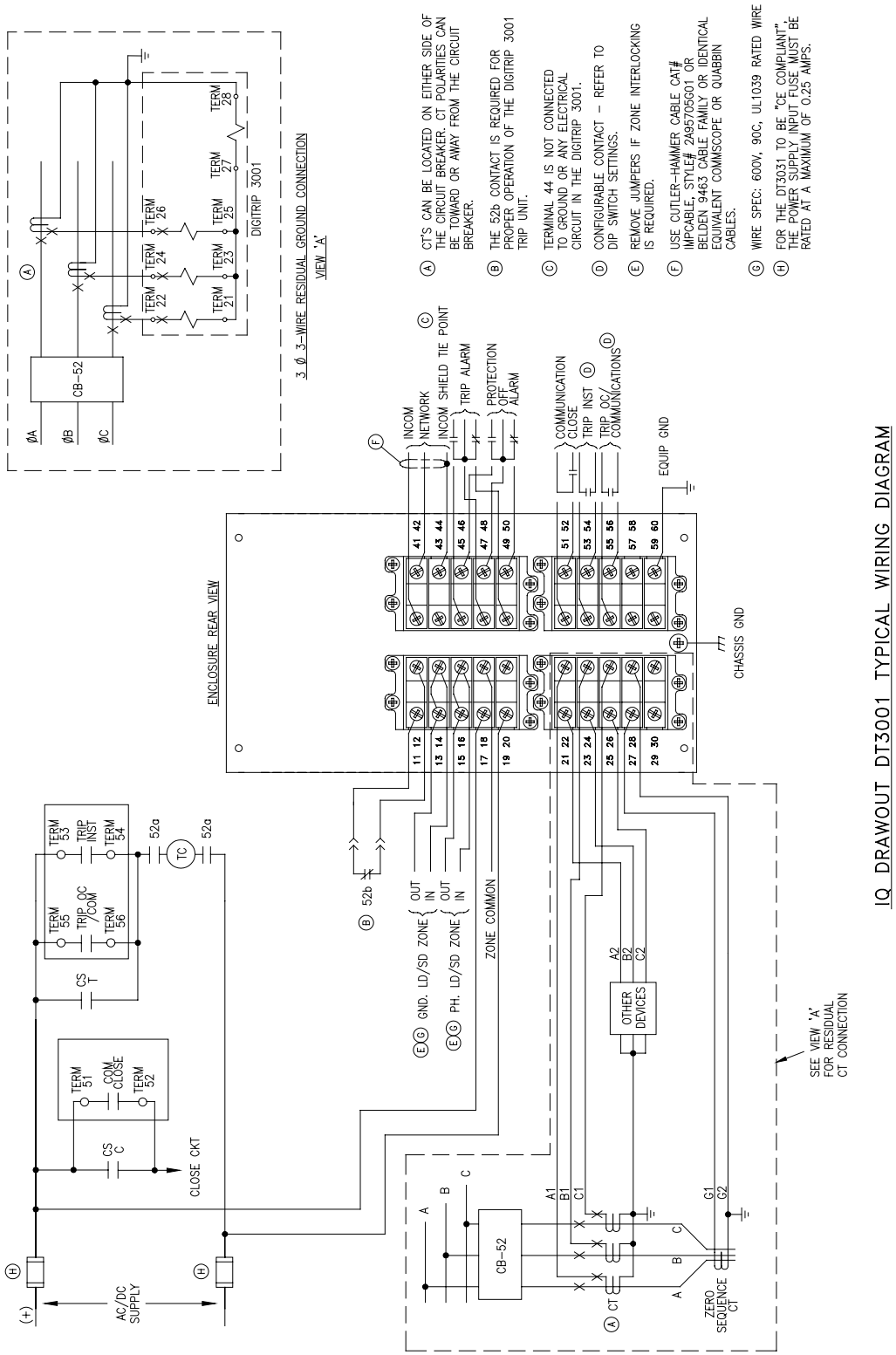

Fig. A-7 Digitrip 3001 Typical Wiring Diagram

A5.0 APPLICATION CONSIDERATIONS

Zone selective interlocking is available on the Digitrip 3001 Protective Relays for the inverse time and short time functions on the phase and ground elements. Refer to Figure A-8 for a typical phase zone selection interlocking wiring diagram or Figure A-9 for a typical ground zone interlocking wiring diagram. The terminal numbering is different from that of the standard DT3001 Protective Relay.

NOTES:

1. Maximum distance between first and last phase or ground zone interconnection cable should be 250 feet. Route separate from power conductors.
2. Jumper on devices in last zone used to provide time delay per inverse time overcurrent or short delay time setting. If jumper is not used the Digitrip 3001 will initiate trip without time delay (nominally 0.1 seconds).
3. Up to 10 Digitrip devices may be wired in parallel to provide a single upstream restraint signal.
4. Only one zone common used for both phase and ground.
5. DO NOT CONNECT ZONE COMMON TO EARTH GROUND.

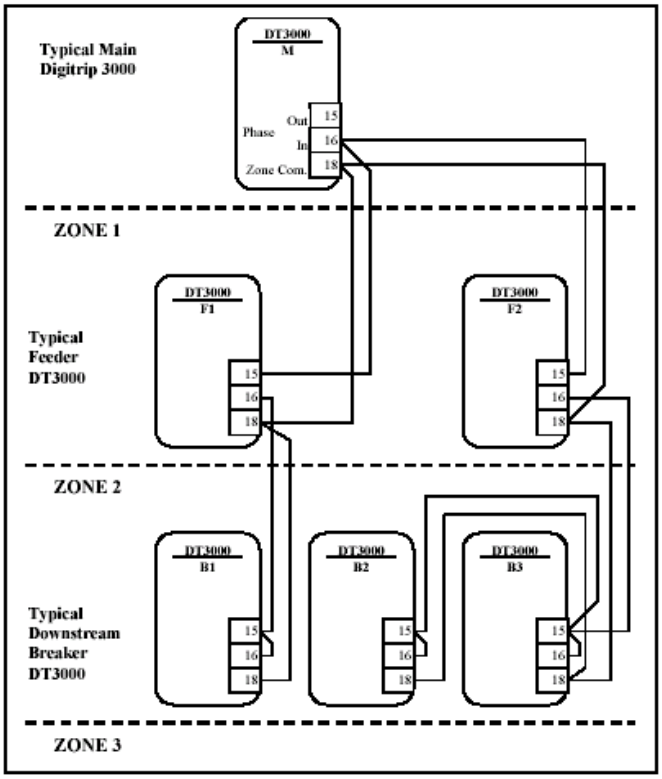

Fig. A-8 Typical Phase Zone Selective Interlocking Connection Diagram

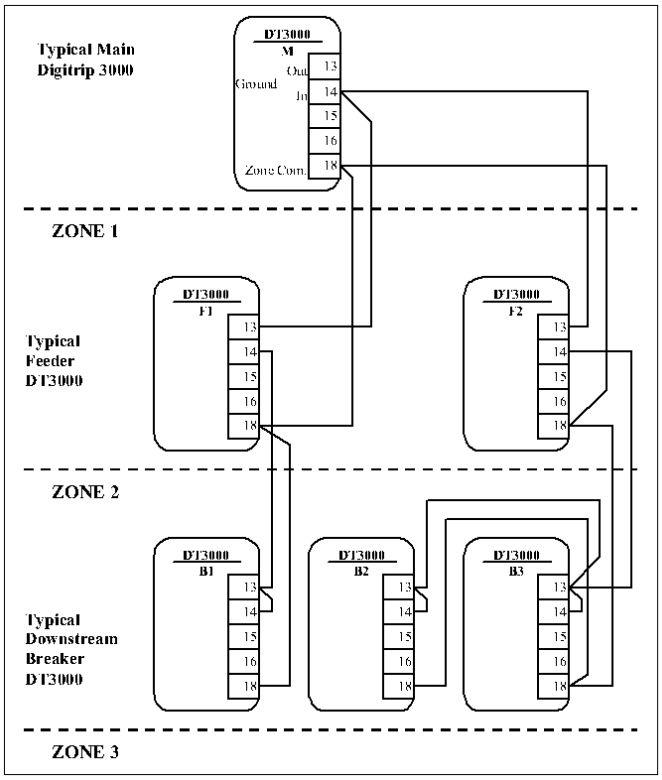

Fig. A-9 Typical Ground Zone Selective Interlocking Connection Diagram

A6.0 DRAWOUT OPERATION

A6.1 INSERTING THE RELAY

Before the Digitrip 3001 is inserted into the Drawout Enclosure:

- Verify that all wiring is correct as shown in the wiring diagram.
- Set the DIP switches per Table 5.1

When inserting the DT3001 Drawout into the Drawout Enclosure, use the guides to align the exterior of the device chassis with the interior of the enclosure. Slide the unit into the Case using the guides, pressing firmly until all four latches located on the sides of the device are seated and latched into place. Tabs on the DT3001 Drawout Inner Chassis will prevent the inner chassis from being inserted upside down or being inserted into an enclosure of another IQ product.

CAUTION

THE DT3001 INNER CHASSIS MUST BE FULLY INSERTED AND FULLY LATCHED IN TO ITS DRAWOUT ENCLOSURE FOR PROPER OPERATION OF THE DEVICE.

When the unit is seated properly, the quick release buttons at the top and bottom of the unit will return to their non-

compressed position. The device can now be secured in the enclosure by inserting a utility locking ring in the provided slot.

A6.2 REMOVING THE RELAY

WARNING

REMOVAL OF THE DIGITRIP 3001 INNER CHASSIS FROM THE DRAWOUT OUTER CASE EXPOSES LIVE PARTS, WHERE THE HAZARD OF A FATAL ELECTRIC SHOCK IS PRESENT. ALWAYS DISCONNECT ANY CONTROL OR SOURCE POWER BEFORE TOUCHING ANYTHING ON THE INTERNAL OR EXTERNAL PARTS OF THE DRAWOUT OUTER CASE.

When removing the Inner Chassis from the Drawout Outer Case, first remove any locking ring that has been installed. Press the top and bottom quick release buttons simultaneously, and pull the relay out by its front panel.

APPENDIX B

B1.0 INTRODUCTION

This appendix describes the Dual-Source Power Supply (DSPS) addition to the Digitrip 3000 Protective Relay. Table B-1 lists the DSPS—equipped DT3000 versions.

Table B-1 Ordering Information

New Style Number	Old Style Number	Cat. No.	Description
4D13125G21	4D13125G11	DT3010	DT3000 Protective Relay, std. Firmware 120VAC/Ct Dual Source Power Supply
4D13125G22	4D13125G12	DT3020	DT3000 Protective Relay, std. Firmware 120VAC/Ct Dual Source Power Supply

B2.0 GENERAL DESCRIPTION

The Digitrip 3000 with Dual-Source Power Supply (DSPS) is a microprocessor-based feeder overcurrent protective relay designed for ac auxiliary power applications. The DSPS versions, DT3010 and DT3020, include an integral power supply module which:

- Powers the relay from nominal 120 Vac, 50/60Hz (DT3010 model) or 240 Vac, 50/60Hz (DT3020 model) auxiliary power, which is normally connected and available.
- Operates solely from the main current transformers (Ct) during a fault if the normally connected auxiliary ac voltage is not available, like an electromechanical relay or an electronic “self-powered” relay.

The Ct powering capability is critical for tripping if the ac auxiliary supply or its fuses fail prior to the fault; or if the fault itself collapses the supply voltage at the critical moment when tripping is needed.

The DT3000 with Dual-Source Power Supply design offers significant performance and reliability benefits over the electromechanical or “self-powered” relays. It provides a full-time metering display, remote communications and self-monitoring functions. In addition, there is no calibration required. The burden is lower than most electromechanical and solid state self-powered relays.

The DT3000 with DSPS provides long-term, robust, maintenance-free performance, which can’t be achieved with an energy-storing un-interruptible power supply (UPS). The DSPS will operate anytime there is a fault even after an extended power outage.

Fig. B-1 Digitrip 3000 with DSPS

Table B-2 DT3010 AND DT3020 SPECIFICATIONS AND TEST SUMMARY

COMPLIANCE TESTING:

Certifications:

- CUL/UL Recognized, File # E154862
- CAN/CSA C22.2 No. 14-M91 Industrial Control Equipment
- UL 1053 (6th Edition 1999)
- ANSI C37.90 (1989)
- EN 55011 (1991)

Emission Tests:

- EN 55011 (1991) - Group 1 Class A
- FCC 47 CFR Chapter 1 - Part 15 Subpart b Class A

Immunity Tests:

- ANSI C37.90.1 (1989) – Surge Withstand Capability 2.5KV OSWC, 4KV FTSWC
- ANSI C37.90.2 (1995) – RF Radiated Withstand Capability to 35V/M – all models
- EN61000-4-2 (1995) – ESD Immunity to 8KV
- IEC 255-22-2 (1989) - ESD Immunity to 8KV
- EN61000-4-3 (1995) – RF radiated Immunity to 10V/M
- IEC 255-22-3 (1989) - RF radiated Immunity to 10V/M
- EN61000-4-4 (1995) - Electrical Fast Transient Immunity to 10V/M
- IEC 255-22-4 (1989) - Electrical Fast Transient Immunity to 10V/M
- EN61000-4-5 (1995) – Surge Immunity 2/1KV C/DM
- EN61000-4-6 (1996) – RF conducted Immunity to 10Vo
- EN61000-4-11 (1994) – Voltage Dip. Short Int., Variations Immunity

OUTPUT TRIP CONTACTS:
(Trip OC/Comm, Trip Inst, & Comm Close)

- Momentary:
  Make 30A ac/dc for 0.25 sec
  Break 0.25A @ 250Vdc
  Break 5A @ 120/240Vac
- Continuous:
  5A @ 120/240Vac
  5A @ 30Vdc
- Meets ANSI C37.90, paragraph 6.7

CONTROL POWER:

- Input Voltage:

	Nominal	Oper. Range
DT3010:	100 to 120Vac	70 to 132Vac (50/60Hz)
DT3020:	200 to 240Vac	140 to 264 Vac (50/60Hz)

- Power Consumption: 15VA maximum

CURRENT MONITORING:

- True rms Sensing:
  3-Phase and Ground
- Display Accuracy:
  ±1% of Full Scale [I_n] from 0.04 x I_n to 1 x I_n
  ±2% of Full Scale [I_n] from 1 x I_n to 2 x I_n
- Amperes Demand:
  Average Demand over 5 Minute Sampling Window
- High Load:
  85% of Inverse Time Overcurrent Setting

CURRENT INPUTS:

- Ct:
  5A Secondary
- Ct Burden:
  <0.04 ohm @ Rated Current (5A)
  <0.1 VA @ Rated Current (5A)
  5A (Secondary or Ct (Primary)
- Saturation:
  30 x I_n
- Ct Thermal Rating:
  10A continuous
  500A for 1 Second

PHASE AND GROUND TIME-CURRENT CURVES:

- Thermal
  It [Moderately Inverse]
  I^2t [Very Inverse]
  I^4t [Extremely Inverse]
  Flat [Definite Time]
- ANSI:
  (Per ANSI C37.112,1996)
  Moderately Inverse
  Very Inverse
  Extremely Inverse
- IEC:
  (Per IEC 255-3, 1989)
  IEC-A [Moderately Inverse]
  IEC-B [Very Inverse]
  IEC-C [Extremely Inverse]
  IEC-D [Definite Time]

CT (PRIMARY) SETTING AVAILABLE:

Phase & Ground
10/25/50/75/100/150/200/250/300/400/500/600/630/800/1000/1200/1250/1500/1600/2000/2400/2500/3000/3200/4000/5000

TIMING ACCURACY:

- Inverse Time Overcurrent Time:
  ±10% @ >1.5 x Pickup
- Short Delay Time:
  ±50ms

PHASE OVERCURRENT PICKUP RANGES:

- Inverse Time Overcurrent Setting:
  (0.2 to 2.2) x I_n [29 settings]
- Short Delay Setting:
  (1 to 11) x I_n, None [25 settings]
- Instantaneous Setting:
  (1 x 25) x I_n, None [30 settings]

GROUND OVERCURRENT PICKUP RANGES:

- Inverse Time Overcurrent Setting:
  (0.1 to 2.0) in I_n [26 settings]
- Short Delay Setting:
  (0.1 to 11) x I_n, None [45 settings]
- Instantaneous Setting:
  (0.5 to 11) x I_n, None [33 settings]

Table B-2 DT3010 AND DT3020 SPECIFICATIONS AND TEST SUMMARY (CONTINUED)

TIME DELAY SETTINGS: • Inverse Time Overcurrent Time Multiplier: It, I^2t, I^4t Curve: 0.2 to 40 [48 settings] Flat: 0.2 to 2.0 [21 settings] ANSI (all): 0.1 to 5.0 [50 settings] IEC (all): 0.025 to 1.00 [40 settings] • Short Delay Time: 0.05 to 1.5 sec. [22 settings]	**ENVIRONMENT:** • Environment: Indoor Use Only, Pollution Degree II, Altitude 2,500m, Installation Category II • Mounting Location: Device should be positioned near the main disconnect • Operating temperature: -30 to +55 Degrees Celsius • Operating Humidity: 0 to 95% Relative Humidity [Non-Condensing] • Storage Temperature: -40 to +70 Degrees Celsius
AUXILIARY RELAYS: **(Protection Off Alarm and Trip Alarm)** • Make/Break: 5A @ 120/240Vac & 30Vdc • Continuous: 5A @ 120/240Vac 5A @ 30Vdc	**ADDITIONAL TESTS:** • Dielectric Strength: Current Inputs: 3,000Vac for 1 minute Phase to Phase • Seismic Test: Meets requirements for UBC and California Building Code Zone 4 ZPA = 3.5
COMMUNICATIONS: • PowerNet Compatible / Built-in INCOM • Data Rate is 1200 or 9600 Baud • Set INCOM address from front panel	**ZONE SELECTIVE INTERLOCKS:** • Phase: Inverse Time Overcurrent and Short Delay • Ground: Inverse Time Overcurrent and Short Delay

Notes: 1. For Ground Pickup < 0.2pu; Time Tolerance ± 15%.

CAUTION

TO BE EFFECTIVE, THE DIGITRIP 3000 WITH DSPS MUST BE USED WITH A BREAKER HAVING CAPACITOR TRIP OR OTHER STORED-ENERGY TRIP MECHANISM THAT CAN OPERATE WHEN THE AC SUPPLY HAS FAILED.

B3.0 FUNCTIONAL DESCRIPTION

The Dual-Source Power Supply contains 1 ac voltage transformer and 3 ac current transformers. The ac voltage transformer is used to supply nominal ac control power to the unit. The current transformers are used to power the unit from the line current. Normally, the unit will operate from the ac auxiliary power. Since this voltage is usually obtained from the system containing the circuit that the relay is protecting, a fault on the protected line could cause the ac voltage to drop below an acceptable operating level (below approximately 70 volts for DT3010 and 140 volts for DT3020). All three current transformers secondary are connected in series to supply this power. The DSPS will supply enough power to operate the Digitrip 3000 overcurrent relay in the tripped state with currents greater than 1.8 per unit rated secondary current, or 9A, in a single- phase. The DSPS will operate with 3-phase currents in a tripped state with currents greater than 1.2 per unit or 6A rated secondary current.

NOTE: There will be no effect to the DT3000 relay trip time accuracy when the Dual-Source Power Supply switches from normal ac voltage to fault-current power.

B4.0 INSTALLATION

B4.1 PANEL PREPARATION

The dimensions for the cutout, along with the location of the mounting holes, are shown in Figure 5-1. Before actually cutting the panel, be sure that the required 3-dimensional clearances for the relay chassis allow mounting in the desired location. The Digitrip 3000 with DSPS dimensions are shown in Figure B-2.

B4.2 MOUNTING THE DIGITRIP 3000 WITH DUALSOURCE POWER SUPPLY

Once the cutout has been prepared in the panel or switch gear enclosure, according to Figure 5-1, the Digitrip 3010/3020 can be mounted.

CAUTION

SUPPORT THE PROTECTIVE RELAY FROM THE FRONT SIDE WHEN MOUNTING. WITHOUT SUCH SUPPORT, THE PROTECTIVE RELAY COULD FALL AND CAUSE DAMAGE OR INJURY COULD RESULT.

Do not use a tap on the face of the relay. Use all self-tapping screws included with the relay to mount the unit on the panel.

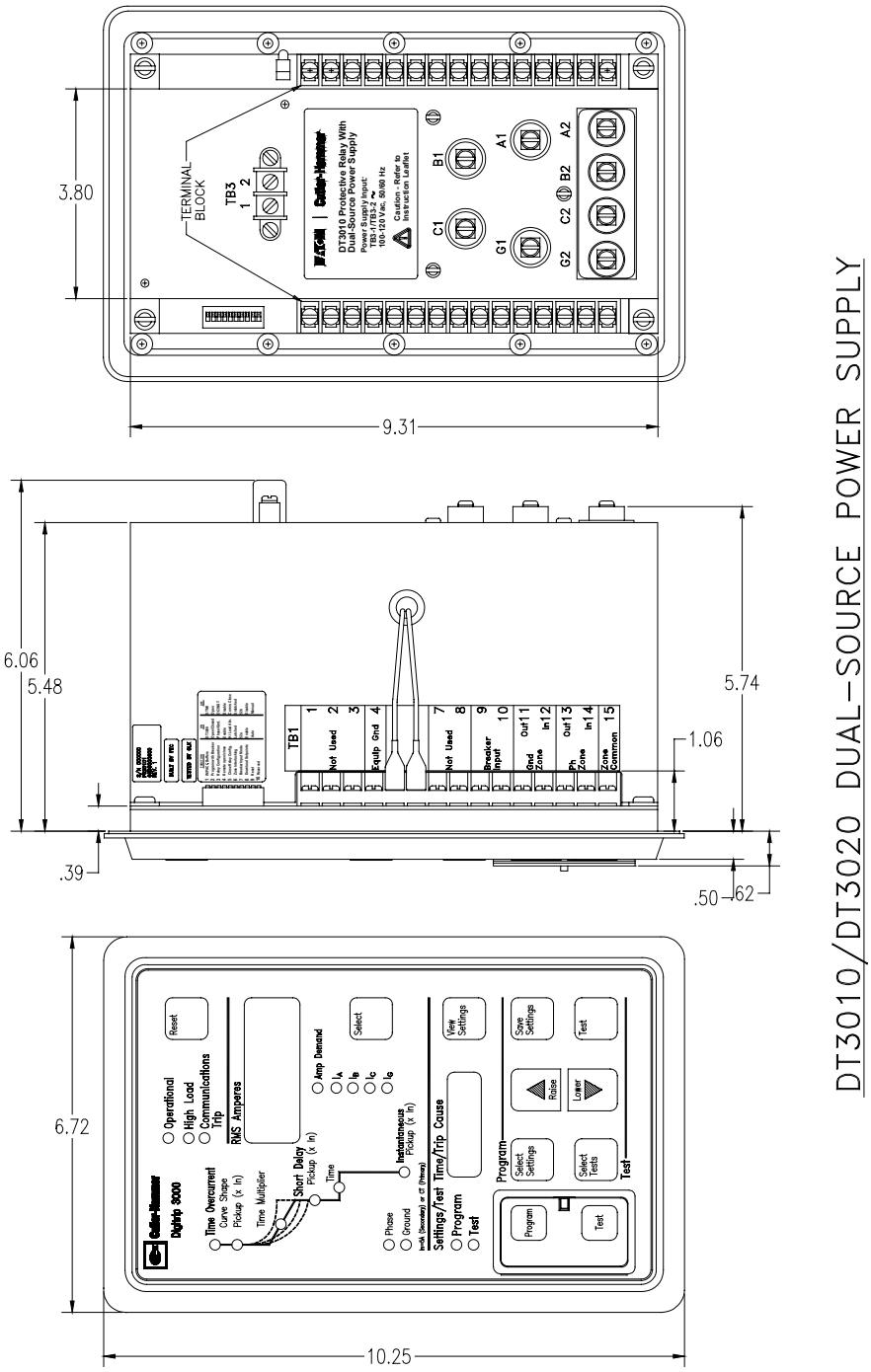

Fig. B-2 Digitrip 3010/3020 Dimensions (Inches)

B5.0 WIRING AND SETUP

WARNING

ENSURE THAT THE INCOMING AC POWER SOURCES ARE DISCONNECTED BEFORE PERFORMING ANY WORK ON THE DIGITRIP 3000 PROTECTIVE RELAY OR ITS ASSOCIATED EQUIPMENT. FAILURE TO OBSERVE THIS PRACTICE COULD RESULT IN EQUIPMENT DAMAGE, SERIOUS INJURY, AND/OR DEATH.

Refer to Figures 3-1, B-3, B-4, and B-5 for the DT3010/DT3020 typical wiring diagrams. Note the following:

- Direct wire connections to the terminal blocks must not be larger than No. 14 AWG wire. However, larger size wires can be used for the CT connections, with the appropriate ring terminal.
- All contacts are shown in the de-energized position.

NOTE: The Protection Off Alarm Relay is energized when ac control power is applied and the DT3000 is operating properly. To obtain a contact that closes when protection is lost, use terminals 9 & 11 of TB2. For a contact that opens when protection is lost, use terminals 9 & 10 of TB2.

- The Digitrip 3000 comes with the zone interlocking jumpers installed (TB1 terminals 11 to 12 and 13 to 14). Leave these jumpers installed if zone selective interlocking is not used. See Section 4 for more information on zone interlocking.

NOTE: All wiring must conform to applicable federal, state, and local codes.

B6.0 APPLICATION CONSIDERATIONS

B6.1 SENSITIVITY AND CT RATIOS

For scenarios where the relay must trip with loss of ac power, the main-Ct secondary current must be greater than 9 amperes for a single-phase-to-ground fault or 6 amperes for a three-phase fault. For best coverage of faults, the Ct ratio should be chosen so that normal full loading of the protected feeder corresponds to a secondary current of approximately one per unit or 5A secondary.

CAUTION

BEWARE OF MISAPPLICATION OF MAIN-CT RATIOS. CONSIDER A CIRCUIT WITH A 400A LOAD THAT NORMALLY REQUIRES A 400:5 CT RATIO, BUT THE CT IS CONNECTED FOR 1200:5. NORMAL LOADS WILL APPEAR AS SMALL CURRENTS, AND EVEN SOME FAULTS MAY HAVE SECONDARY CURRENTS BELOW 1 PER UNIT. THE DSPS WILL NOT BE ABLE TO POWER THE RELAY FOR THESE FAULTS.

B6.2 TRIPPING ON FACILITY ENERGIZATION

Normally, the Digitrip 3000 with DSPS will be powered from the auxiliary ac voltage. If no auxiliary ac control power is present when the breaker closes into a fault or if power is restored to a facility and a fault is present, the relay will power-up and trip provided the current levels are above the minimum operating level. In this case, trip times will be approximately 100 ms longer than the case of having normal ac control voltage prior to the fault.

This will also be true if the ac auxiliary power transformer fails or the supply fuses have blown at any time prior to the fault.

Visible front-panel metering displays, and/or network data communications of the relay, comprise a good check on the integrity of the ac supply. In addition, the Protection Off alarm will provide alarm indication if the power is lost or if the relay has failed.

B6.3 CT SATURATION

The DSPS has been designed and extensively tested to ensure continued relay powering when the main Cts saturate. It powers the relay even for extreme cases in which the Ct delivers only a succession of current spikes of 1 to 2 ms each half-cycle.

Pay attention to the standard measuring limitations of any protective relay with saturated Cts. The saturated Ct is exhibiting serious ratio error, and any connected relay will measure lower current than is actually flowing in the primary circuit. Tripping times will be longer than planned. In extreme cases, the relay may not trip at all.

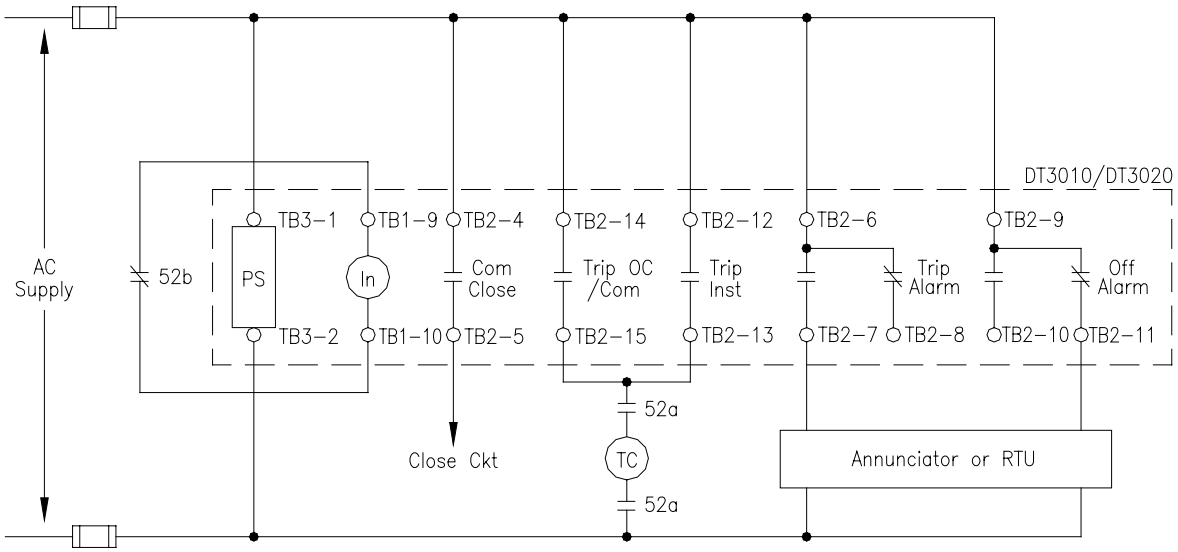

Fig. B-3 Digitrip 3010/3020 Protective Relay Typical AC Schematic

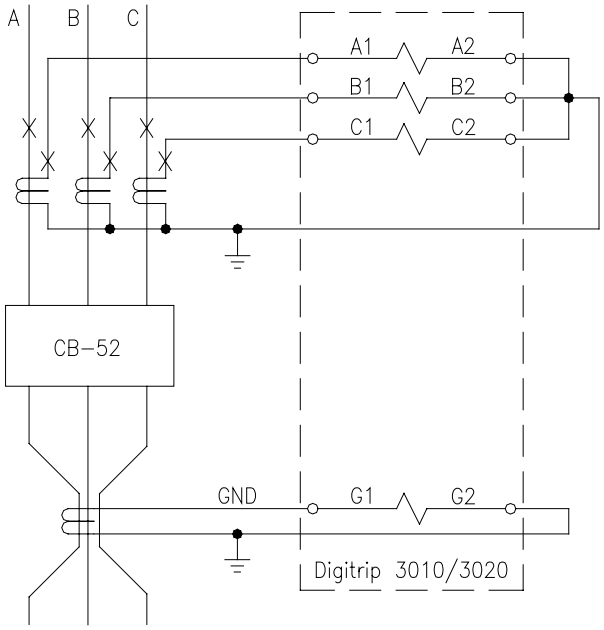

FIG. B-4 DIGITRIP 3010/3020 TYPICAL AC EXTERNAL CURRENT CONNECTION WITH ZERO SEQUENCE GROUND CT

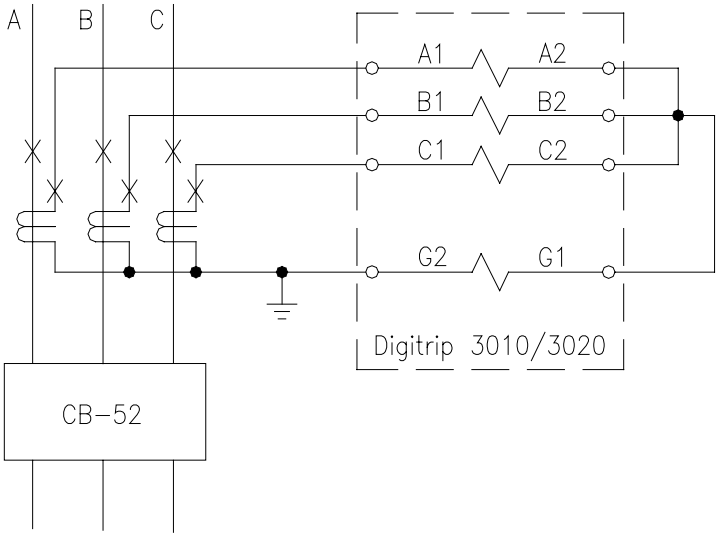

FIG. B-5 DIGITRIP 3010/3020 TYPICAL RESIDUAL GROUND CONNECTION

The Digitrip 3000 is a true rms measuring device, and will integrate the spikes and dead periods to arrive at a current measurement. The user should follow standard application guidelines of comparing the Ct saturation curve with the total connected burden, in light of the maximum fault current. The total burden includes all connected measuring device current windings, plus resistance of the Ct secondary winding itself and all interconnecting wiring. Since saturation curves are plotted with rms-measuring instruments, measurement errors and tripping times can be predicted with good reliability.

The Digitrip 3000 with DSPS can help to reduce Ct saturation problems. The current-powering transformers have been designed to present lower burden than most "self-powered" relays, especially for large fault current magnitudes. The burden is much lower than that of an electromechanical relay.

B6.4 BURDEN DATA

In normal operating conditions, the burden is <0.08 ohms with 3-phase 1A Ct current, or 0.2 per unit, and drops to <0.04 ohms at high current levels. Figures B-6 and B-7 present Ct burden data in ohms and volt-amperes. In these cases, the burden shown is the total Ct terminal value, which is the DSPS plus the relay measuring circuits, for the indicated operating condition.

Figure B-6 shows burden impedance magnitude in ohms. The two lower curves are the values with ac power applied; the upper two are with Ct powering only. For each of these pairs, one curve shows the burden for a single-phase current (representing a single-phase-to-ground fault) and the other for three balanced phases with normally arrayed 120-degree phase angle increments. There is no phase sequence sensitivity.

Figure B-7 shows the burden in volt-amperes for the same four cases.

The three-phase burden cases assume the normal angular distribution of the phases at 120-degree intervals. If the three-phase current inputs are connected in series to a single current source for a lab-bench test, burden results will be slightly different.

B7.0 TESTING THE DUAL-SOURCE POWER SUPPLY

The DSPS requires no maintenance or adjustment. Use the following procedures to check for proper operation. First, confirm or test Digitrip 3000 operation with ac power applied, according to the guidelines of the DT3000. Then, the following can be used to confirm that the DSPS is functioning correctly.

B7.1 IN-SERVICE TEST

CAUTION

THERE MAY BE LIVE VOLTAGES AND CURRENTS PRESENT ON AND AROUND THE DIGITRIP 3000. ONLY QUALIFIED PERSONS SHOULD BE PERMITTED TO PERFORM ANY WORK ASSOCIATED WITH THE EQUIPMENT. FAILURE TO FOLLOW SAFE PRACTICE COULD RESULT IN EQUIPMENT DAMAGE, SERIOUS INJURY AND/OR DEATH..

- Some visible load current should be flowing in the protected feeder circuit. It does not need to be full rated load. Check all three phases.
- Consider disconnecting trip circuits during this live testing, although no tripping tests are called for in the following.
- Connect a dc voltmeter across Digitrip 3000 terminals 5 & 6 on TB1. This is on the left side of the relay as viewed from the rear.
- With ac power applied, this dc meter should read approximately 50 volts.
- Connect an isolated ac multi-meter across any one phase Ct input and observe the voltage drop, which will be less — maybe much less — than 0.25 volt. See Figure B-8.
- Disconnect ac power from the relay. The front panel and relay data communications may go away if the load current is small.
- The ac voltage drop across the Ct input should rise to a larger value, at least twice as large as when ac was applied, and maybe approaching 0.5 volt as shown in Figure B-8.
- The dc voltage on terminals TB1 - 5 & 6 should correspond very roughly to that from the plot in Figure B-9, DSPS output voltage as a function of three-phase current.
- Disconnect instruments, restore ac power to relay, reconnect trip circuits, and check for resumption of front panel & communications operation.

B7.2 LAB BENCH TEST

1. With ac control power applied, set the relay to trip well below 9 A — any phase trip function is OK.
2. Apply more than 9 A to Phase A and confirm tripping. Remove current and reset relay.
3. Remove ac control voltage — relay turns off.
4. Apply 9 A to Phase A again. Relay should power up and trip. No need to recheck timing, but it may be observed to be about 100 ms longer than for ac control powered case. If test current is well above 10 A, avoid applying it for a long period.
5. Repeat step 3 for Phase B.
6. Repeat steps 3 for Phase C, however, this time, use an isolated ac multi-meter to measure the voltage

drop across the Digitrip 3000 current input during the test. Check the value against the "No Vac, 1 Phase I" curve, the highest curve, of Figure B-8.

7. Apply ac control voltage again, with Phase C current still applied, or reapply it. The voltage drop shown on the multi-meter should decrease to the value for the "With Vac, 1 Phase I" curve of Figure B-8. With ac power applied, this voltage will be roughly half of the value without the ac power applied.

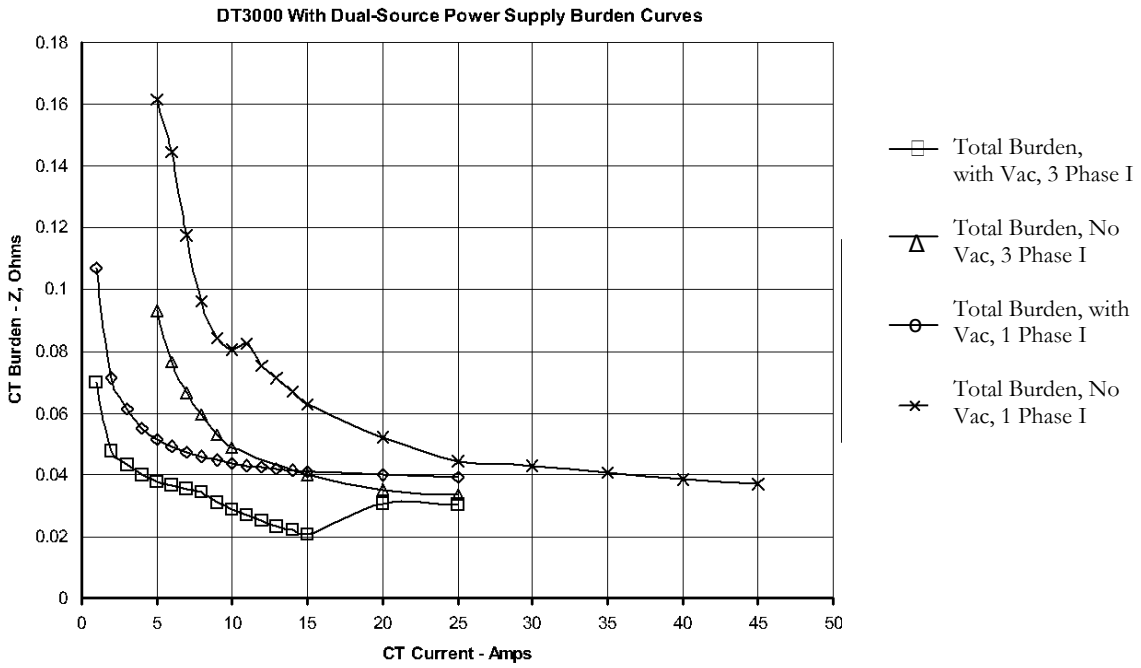

Fig. B-6 Digitrip 3010/3020 Protective Relay Burden Curves - OHMS

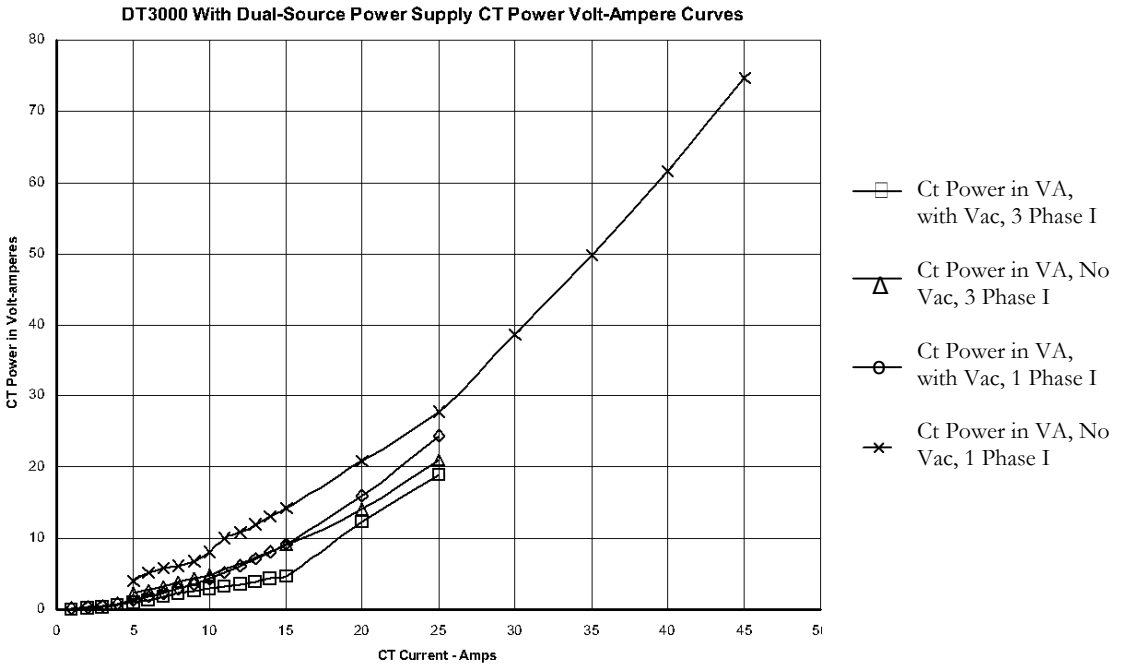

Fig. B-7 3010/3020 Protective Relay Burden Curves - Power in VA

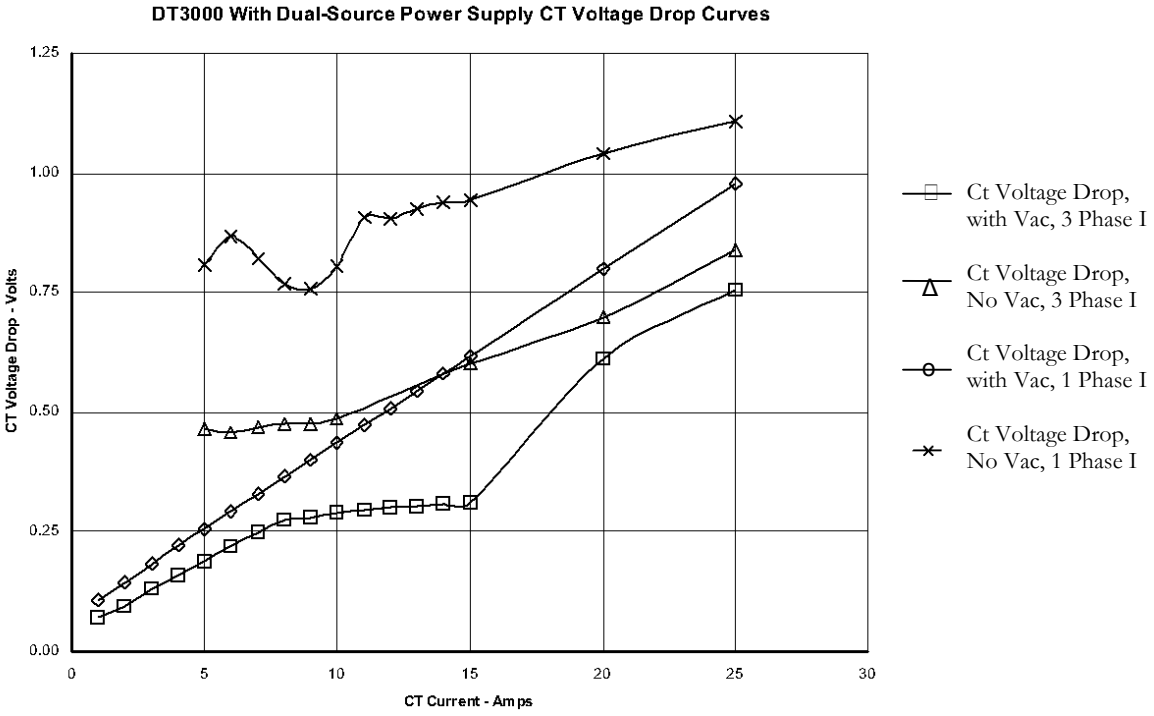

Fig. B-8 Digitrip 3010/3020 Protective Relay Ct Voltage Drop Curves

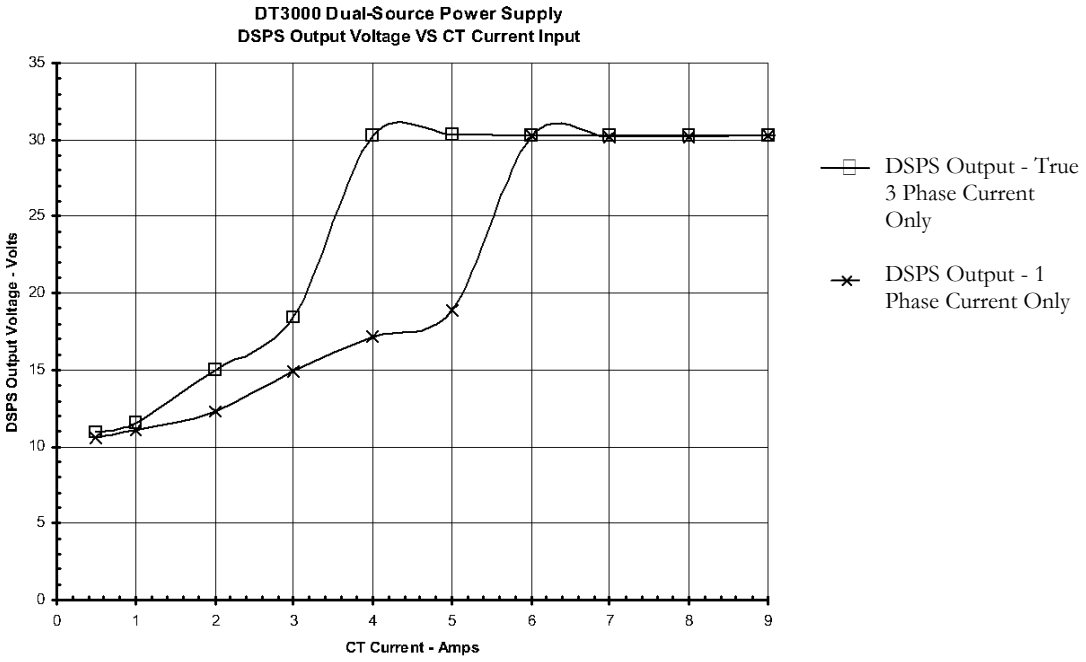

Fig. B-9 DSPS Output Voltage to Relay

This instruction booklet is published solely for information purposes and should not be considered all-inclusive. If further information is required, you should consult Cutler-Hammer. Sale of product shown in this literature is subject to terms and conditions outlined in appropriate Cutler-Hammer selling policies or other contractual agreement between the parties. This literature is not intended to and does not enlarge or add to any such contract. The sole source governing the rights and remedies of any purchaser of this equipment is the contract between the purchaser and Cutler-Hammer.

NO WARRANTIES, EXPRESSED OR IMPLIED, INCLUDING WARRANTIES OF FITNESS FOR A PARTICULAR PURPOSE OR MERCHANTABILITY, OR WARRANTIES ARISING FROM COURSE OF DEALING OR USAGE OF TRADE, ARE MADE REGARDING THE INFORMATION, RECOMMENDATIONS AND DESCRIPTIONS CONTAINED HEREIN.

In no event will Cutler-Hammer be responsible to the purchaser or user in contract, in tort (including negligence), strict liability or otherwise for any special, indirect, incidental or consequential damage or loss whatsoever, including but not limited to damage or loss of use of equipment, plant or power system, cost of capital, loss of power, additional expenses in the use of existing power facilities, or claims against the purchaser or user by its customers resulting from the use of the information, recommendations and description contained herein.

Eaton Corporation
Cutler-Hammer business unit
1000 Cherrington Parkway
Moon Township, PA 15108-4312
USA
www.cutler-hammer.eaton.com

I.B. 17555D / Style # 8163H25H06
For additional information please call:
Power Management Products Center
1-800-809-2772 option 1/option 1