INSTRUCTION MANUAL

FOR

VARIABLE PERCENTAGE DIFFERENTIAL RELAY

MODEL BE1-87G

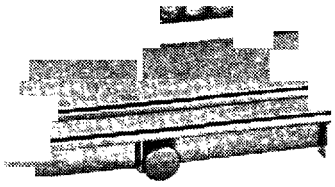

Basler Electric
Highland, Illinois

Publication 9 1708 00 990

Revision G

CONTENTS

Section 1 GENERAL INFORMATION 1-1

Description 1-1
Applications 1-1
Variable Restraint Characteristic 1-1
Design Highlights 1-3
Model and Style Number 1-3
Style Number Example 1-3
Style Number Identification Chart 1-4
Specifications 1-4

Section 2 CONTROLS and INDICATORS 2-1

Section 3 FUNCTIONAL DESCRIPTION 3-1

General 3-1
Functional Description 3-1
Current Transformers 3-1
Stabilizing Reactor 3-2
Bandpass Filters 3-2
Comparator 3-2
Outputs 3-2
Targets (Optional) 3-2
Push-To-Energize (Optional) 3-2
Power Supply Status Output (Optional) 3-2
Power Supply 3-3

Section 4 INSTALLATION 4-1

General 4-1
Relay Operating Precautions 4-1
Dielectric Test 4-1
Mounting 4-1
Relay 4-1
Stabilizing Reactor 4-2
Connections 4-3
Typical External Connections 4-3
Three Phase Sensing Input Connection 4-4
Single Phase Sensing Input Connections 4-5
Operational Test Procedure 4-5
Operational Test Setup 4-7
Setting The Relay 4-8
General 4-8
Burden Limit 4-9
Relative CT Performance 4-9
Setting Example 4-10
Operating Characteristics 4-11
Extended Restrain Operating Characteristic 4-12
Pickup Response Timing 4-12
Reactor Module Mounting 4-13
Outline Dimensions 4-14
Panel Drilling Diagram 4-16

Section 5 MAINTENANCE 5-1

General 5-1
In-House Repair 5-1
Storage 5-1

Section 6 MANUAL CHANGE INFORMATION 6-1

SECTION 1
GENERAL INFORMATION

DESCRIPTION

The BE1-87G is a single- or three-phase solid state Variable Percentage Differential Relay designed to provide selective, high-speed, differential protection for generators, motors and shunt reactors.

The selectivity of differential relaying is based on the ability of the relay to distinguish between an internal fault (within the protected zone) and an external fault. Under normal operating conditions the current into the protected zone equals the current out of the protected zone with a net operating current equal to zero. Internal faults upset this balance and result in a difference between the input and output currents. External faults have relatively little effect on the balance because the protected zone input current still equals the output current. Therefore, by comparing the currents on both sides of the protected element or zone and detecting when these currents are not equal, a differential relay acts to isolate the element or zone from the system with unsurpassed effectiveness.

The BE1-87G typically trips a lockout relay (86) which in turn trips the generator breaker and, when present, the field and/or neutral breakers.

APPLICATIONS

The BE1-87G Variable Percentage Differential Relay is recommended for the following specific applications.

a) Generators: any terminal voltage and a rating of 1000 kVA and above.

b) Generators: any kVA rating and a terminal voltage of 5 kV and above.

c) Generators: a terminal voltage of 2200 V or higher, and a rating of more than 500 kVA.

d) Motors: rated 1500 horsepower and above.

e) As primary protection on shunt reactors for transmission lines.

f) Generator ground differential

Differential relaying is the most selective form of fault protection which may be applied to the individual elements or zones of ac power systems. Various types of differential relays and relaying systems have evolved to take advantage of the differential principle.

WARNING

Relays manufactured prior to July 22, 1991 (EIA date code symbol 9129 and previous) do **NOT** have case jumpers between terminals 7 and 8 (single phase units). This also applies to three phase relays terminals 7 and 8, terminals 13 and 14, and terminals 17 and 18. Exercise **CAUTION** when grounding or testing current transformer circuits connected to these terminals.

Typical connections are shown in Figure 1-1 and Figure 1-2.

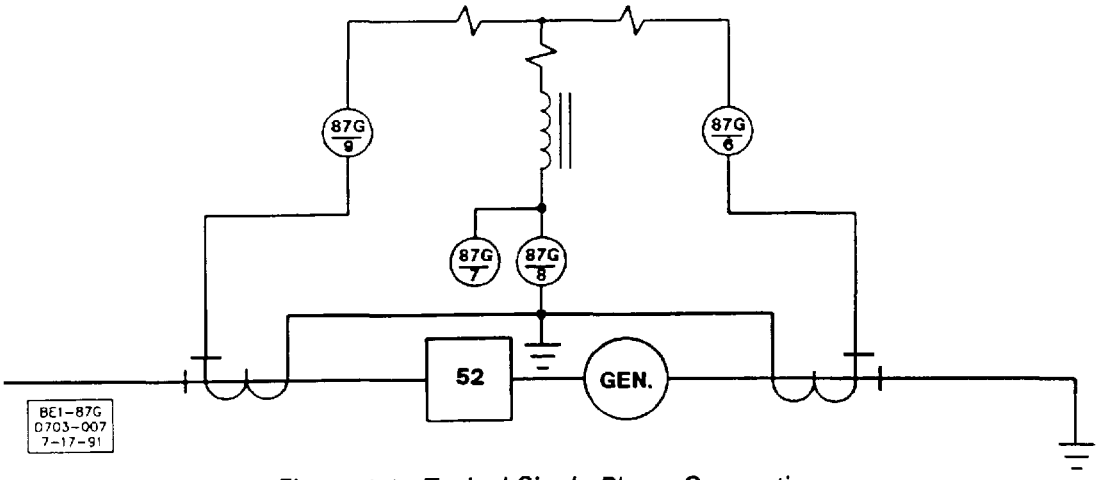

Figure 1-1. Typical Single Phase Connection.

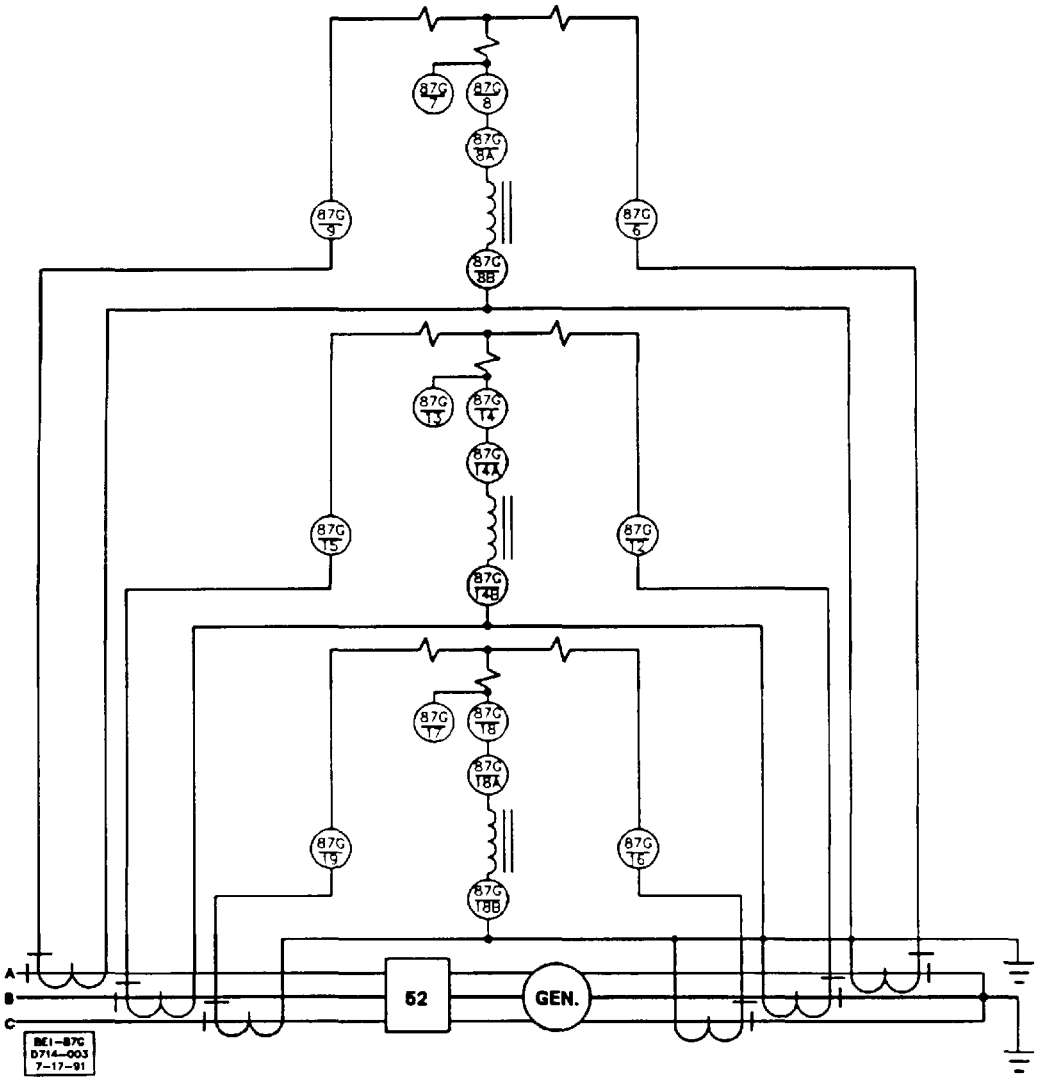

Figure 1-2. Typical Three Phase Connection.

Variable Restraint Characteristic

At high current levels, the inevitable difference in the saturation characteristics between current transformers indicates a need for a compensating decrease in relay sensitivity. The design of the BE1-87G provides a restraint factor which is proportional to input current when the restraining current (I_R) is greater than 5 A. The BE1-87G compares the protected zone sensed input and output currents. The lesser of the two sensed current levels becomes the restraining current. The difference between the two sensed currents (the operating current) is compared to a reference established by the sensitivity setting, and adjusted by an amount proportional to the restraining current. This makes the BE1-87G more sensitive to low current internal faults, and less sensitive to external faults with high levels of through current.

When the restraining current is 5 amperes or less the relay trips when the differential current exceeds the relay setting (I_S). But when the restraining current is greater than 5 amperes, the overall sensitivity is a combination of the front panel setting and the restraint factor.

Design Highlights

Some of the many advantages of the solid-state BE1-87G Variable Percentage Differential Relay are summarized as follows.

1. Seven sensitivity levels: 0.1 A, 0.15 A, 0.2 A, 0.4 A, 0.5 A, 0.8 A, and 1.6 A. The seven levels allow compensation for CT mismatch and provide the flexibility and adaptability necessary for many special applications such as splitwinding generator protection.

2. Stabilizing reactor. Minimizes dissimilar performance of system CTs. Reactor can be located remote from BE1-87G for flexibility of system installation.

3. Variable restraint. The variable restraint characteristic (vs. constant restraint characteristic) allows increased sensitivity to low current internal faults while providing increased security against high levels of through current caused by external faults.

4. Single- or three-phase availability. Either configuration can be provided in a Basler Electric S1 drawout case.

5. High-Speed Operation. The BE1-87G operates in 20 milliseconds for fault levels of 10 times the sensitivity setting, thus minimizing potential damage to the protected equipment. Response characteristics are shown in Figure 4-11 on page 4-12.

MODEL AND STYLE NUMBER

The electrical characteristics and operational features included in a specific relay are defined by a combination of letters and numbers which constitutes the device's style number. The style number together with the model number describe the features and options in a particular device and appear on the front panel, drawout cradle, and inside the case assembly. The model number BE1-87G designates the relay as a Basler Electric Class 100 Variable Percentage Differential Relay.

Style Number Example

The following style number identification chart illustrates the features and options for BE1-87G relays. For example, if the style number were **BE1-87G GIE AIJ AOCOF** the device would have the following:

BE1-87G Model Number
- **G** Three-phase sensing input
- **1** Sensing range switch selectable for 0.1, 0.15, 0.2, 0.4, 0.5, 0.8, or 1.6 A
- **E** Normally open output relay
- **A1** Instantaneous timing
- **J** Operating power derived from 125 Vdc or 100/120 Vac
- **A** Internally operated targets (one per phase)
- **0** No option 1 available
- **C** Push-to-energize outputs (pushbuttons)
- **0** No auxiliary output contacts
- **F** Semi-flush mounting

Style Number Identification Chart

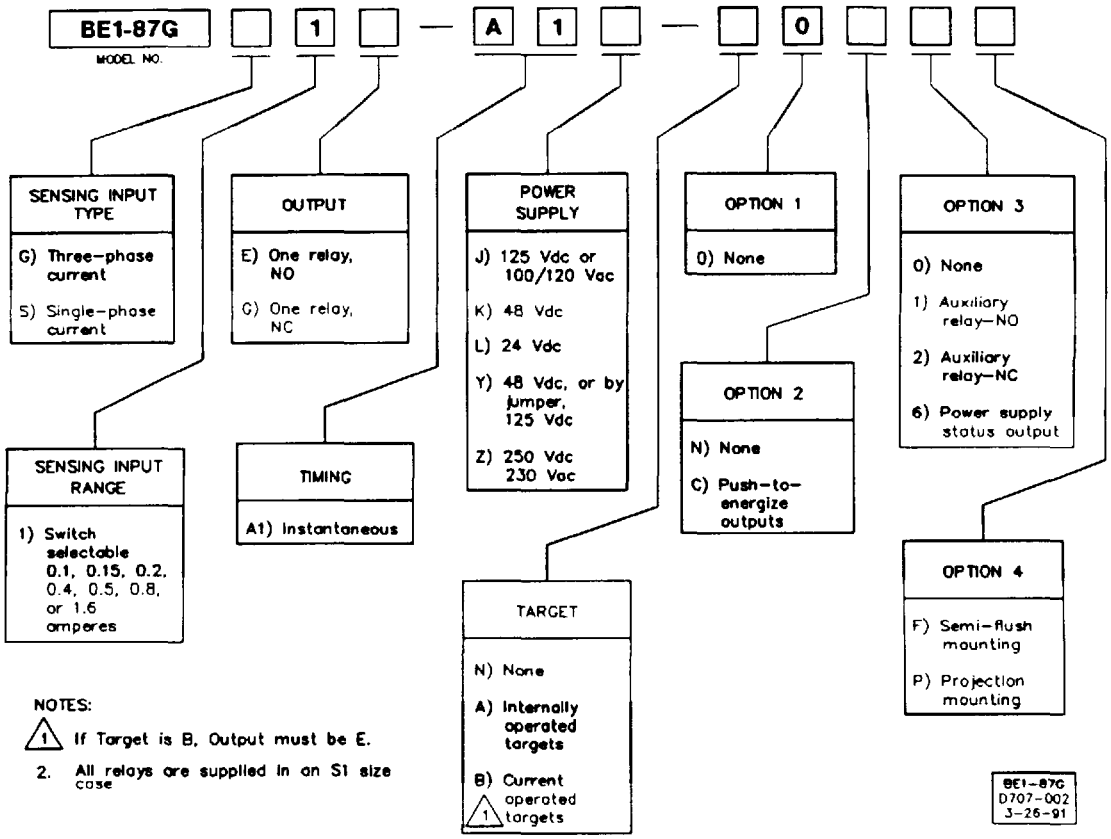

SPECIFICATIONS

The BE1-87G relay is available in single-phase and three-phase configurations, and with the following features and capabilities.

Current Sensing Inputs	Nominally rated at 5 A, 50/60 Hz, with a range of 45 to 65 Hz. Maximum current per input: 10 A continuous, 250 A for 1 second.
Current Sensing Burden	Burden is less than 0.05 ohms per input.
Stabilizing Reactor I^2t Rating	65 A for 1 second at 70 ° C ambient, (I^2t = 4225). Refer to Section 4 for stabilizing reactor impedance characteristic curve.

Pickup Control

A front panel control permits minimum differential (operate) currents of 0.1, 0.15, 0.2, 0.4, 0.5, 0.8, or 1.6 A to be selected. This sensitivity is constant for restraint currents less than 5 A. The ideal operating characteristic is approximated by the following equations.For $I_R \leq 5$ A: $I_{OP} = I_S$

For $I_R > 5$ A: $I_{OP} = I_S + 0.5(I_R - 5)$

where

I_R is the restraint current, defined as the lesser of the input currents.

I_{OP} is the operate current

I_S is the front panel setting

NOTE: The actual operating characteristics are defined by Figure 4-8 and Figure 4-9.

Pickup Accuracy

For $I_R \leq 5$ A, ±5% of the operate pickup characteristic or 25 mA whichever is greater. Refer to Figure 4-9 on page 4-11 for pickup characteristic curves.

For $I_R > 5$ A up to a maximum of 20 A, ±8% of the operate pickup characteristic or 150 mA, whichever is greater. Refer to Figure 4-10 on page 4-12 for pickup values between 5 and 20 A of restraint current.

Dropout

Greater than 90% of operate characteristic.

Timing

< 20 milliseconds at 10 times pickup setting; 70 milliseconds maximum. Refer to Figure 4-10 on page 4-11 for response curve.

Output Contacts

<u>Resistive</u>
120 Vac - make and carry 30 A for 0.2 seconds, carry 7 A continuously, break 7 A.
125 Vdc - make and carry 30 A for 0.2 seconds, carry 7 A continuously, break 0.1 A.

<u>Inductive</u>
120 Vac - make and break 0.1 A (L/R = 0.04).
125 Vdc - make and break 0.1 A (L/R = 0.04).

Target Indicator

Magnetically latched, manually reset target indicators may be optionally selected as either internally operated or current operated. Current operated targets require a minimum of 0.2 A through the output trip circuit and are rated at 30 A for 1 second, 7 A for 2 minutes, and 3 A continuously.

Isolation

2500 Vac at 60 Hz for one minute (1500 Vac for one minute across open contacts) in accordance with IEC 255-5 and ANSI/IEEE C37.90-1989 (Dielectric Test).

Surge Withstand Capability

Qualified to ANSI/IEEE C37.90.1-1989.

Fast Transient Qualified to ANSI/IEEE C37.90.1-1989.

Impulse Test Qualified to IEC 255-5.

Radio Frequency Interference (RFI) Maintains proper operation when tested for interference in accordance with IEEE C37.90.2, Trial-Use Standard Withstand Capability of Relay systems to Radiated Electromagnetic Interference from Transceivers.

Temperature

Operating Range
-40 ° C (-40 ° F) to 70 ° C (158 ° F)

Storage Range
-65 ° C (-85 ° F) to 100 ° C (212 ° F)

Shock 15 g in each of 3 mutually perpendicular axes.

Vibration 2 g in each of three mutually perpendicular axes swept over the range of 10 to 500 Hz for a total of 6 sweeps, 15 minutes each sweep.

Weight 3-phase: 19.2 pounds maximum.
1-phase: 14.3 pounds maximum.

Case Size All units are supplied in an S1 size case.

Power Supply Power for the internal circuitry may be derived from ac or dc external power sources as indicated in Table 1-1.

Table 1-1. Power Supplies

Type	Nominal Input Voltage	Input Voltage Range	Burden at Nominal (Maximum)
K	48 Vdc	24 to 60 Vdc	5.0 W
J	125 Vdc 120 Vdc	62 to 150 Vdc 90 to 132 Vac	5.5 W 14.5 VA
L+	24 Vdc	12 to 32 Vdc	5.5 W
Y*	48 Vdc 125 Vdc	24 to 60 Vdc 62 to 150 Vdc	5.5 W 5.5 W
Z	250 Vdc 230 Vac	140 to 280 Vdc 190 to 270 Vac	20.0 VA

+ Type L power supply may initially require 14 Vdc to begin operating. Once operating, the voltage may be reduced to 12 Vdc and operation will continue.

* The Type Y power supply is field selectable for use with either 48 or 125 Vdc. Selection must be accomplished at the time of installation and prior to application of power. This power supply option is factory set for 125 Vdc.

SECTION 2

CONTROLS AND INDICATORS

Table 2-1. BE1-87G Controls and Indicators (Refer to Figure 2-1)

Locator	Control or Indicator	Function
A	**Sensitivity Switch**	Establishes reference for the operating current. It is a seven position thumbwheel switch labeled A through G. The chart below the switch relates the switch position to the operating current required for tripping when the restraint current is ≤ 5 A. The operating characteristic curves are shown in Figures 4-8 and 4-9.
B	**Power Indicator**	LED illuminates to indicate power supply is operating.
C	**Target Reset Lever (Optional)**	Linkage extends through bottom of front cover to reset magnetically latching target indicators.
D	**PUSH-TO-ENERGIZE Switch (Optional)**	A momentary contact pushbutton switch accessible by inserting a 1/8" diameter non-conducting rod through the front panel. Operates the output and auxiliary relays.
E	**Target Indicators (Optional)**	Magnetically latching indicators which indicate the associated phase that has caused a trip.

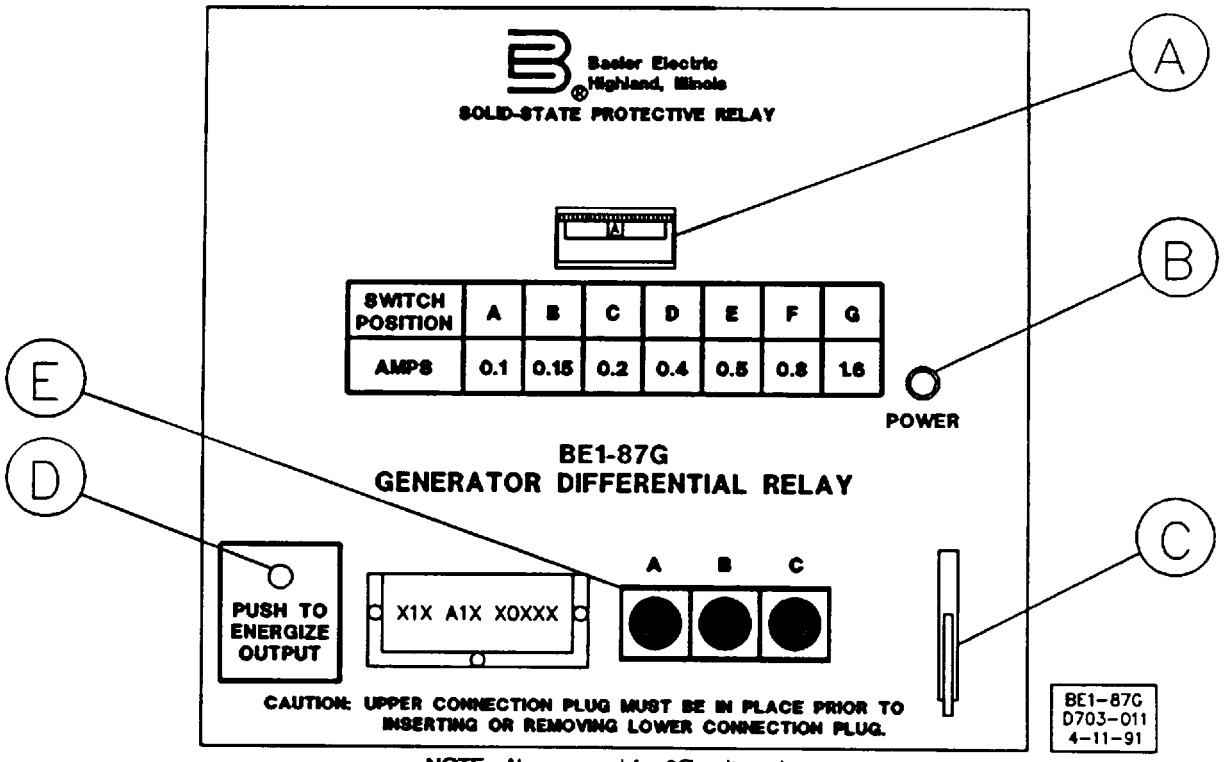

NOTE: Above panel for 3Ø units only.

Figure 2-1. Location of Controls and Indicators

SECTION 3
FUNCTIONAL DESCRIPTION

GENERAL

The BE1-87G is a static device which protects motors and generators by providing an output signal when incoming current does not match outgoing current by a predetermined but variable limit. The functional block diagram in Figure 3-1 illustrates the overall operation of the BE1-87G Variable Percentage Differential Relay. Note that it may be configured to monitor either single-phase or three-phase. Phases B and C, when present, are functionally identical to Phase A.

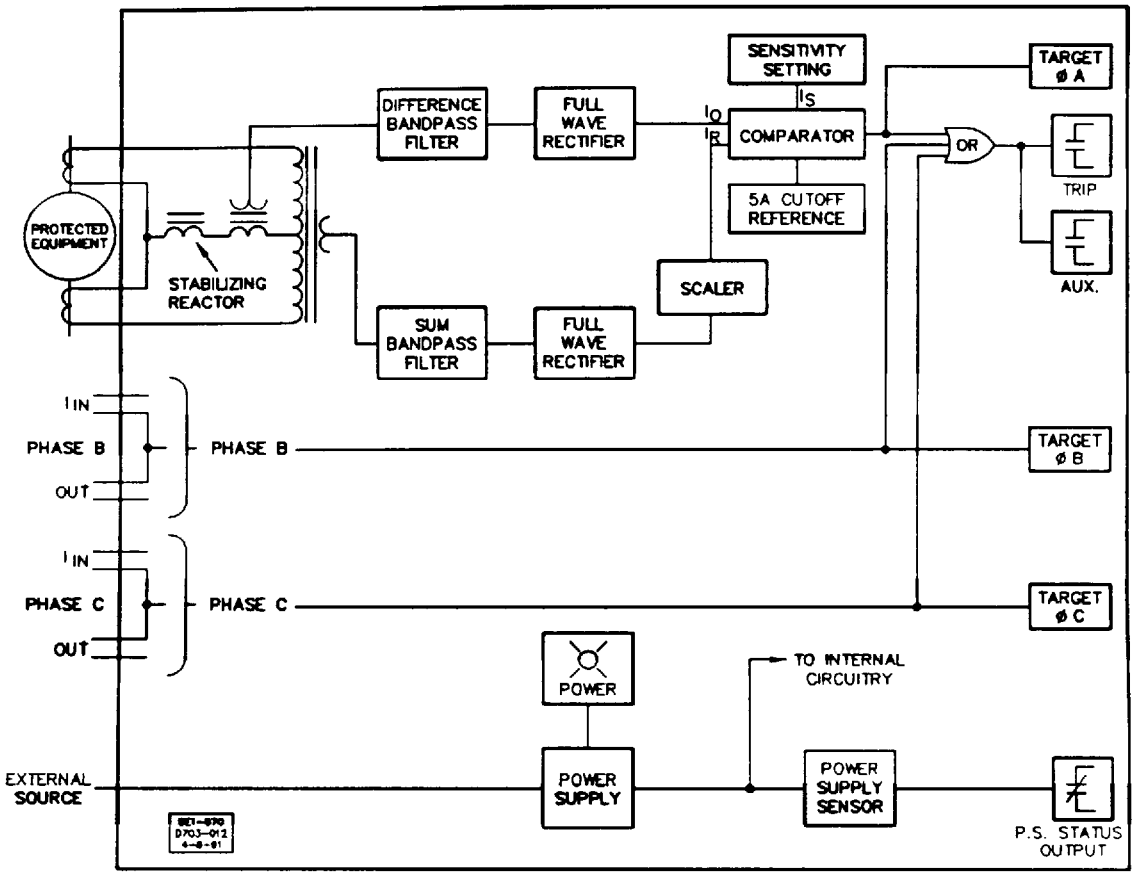

Figure 3-1. Functional Block Diagram

FUNCTIONAL DESCRIPTION

The following paragraphs describe the Relay circuit functions illustrated in Figure 3-1.

Current Transformers

Two standard system CTs with 5 A secondary windings, one transformer on each side of the protected machine, supply sensing current for each monitored phase. The sensing currents are applied to the respective input transformers of the relay, which provide system isolation and determine the differential and sum current. These CTs are gapped to withstand DC offset.

Stabilizing Reactor

Inductor that acts as a stabilizing impedance during external faults, to minimize dissimilar performance of the system CTs. The stabilizing reactor is rated at 65 A for 1 second at 70 ° C ambient temperature, or $I^2 t = 4225$.

Bandpass Filters

Outputs from the relay's transformers are filtered to eliminate the third harmonic and to minimize the effect of DC offset caused by CT saturation (as may occur during synchronization or asymmetrical faults).

The output of the difference bandpass filter is applied to a full wave rectifier. The rectifier scales the differential and applies the output to the comparator as the operating current (I_{OP}) signal .

The output of the sum bandpass filter is applied to a full wave rectifier. The scaled sum of the two inputs represents the restraint current (I_R). The restraint current is scaled for a 50% slope above 5 A.

Comparator

The comparator provides the variable percentage characteristic of the relay as follows:

- When I_R is less than 5 A, the comparator provides an output signal whenever the operate current (I_{OP}) exceeds the front panel sensitivity setting I_S).
- When I_R is greater than 5 A, the front panel sensitivity threshold is increased by adding to it a scaled value representing 1/2 of I_R minus 5 A.

Outputs

In the 3 phase model the outputs of the comparators are OR'd so that the coil of the output relay is energized if the current difference of any monitored phase exceeds the variable percentage limit. When the current difference falls below 90% of the variable percentage threshold, the output relay resets.

Targets (Optional)

If the relay is equipped with targets, the target associated with the phase or phases with excessive differential current is tripped.

Depending on the style number (TARGET Option A or B), a unit may contain either internally operated or current operated targets. Internally operated targets are actuated in conjunction with the output relay. Current operated targets require a minimum of 0.2 A in the output circuit for actuation. Both types are magnetically latching devices and must be manually reset by use of the reset lever.

Push-To-Energize (Optional)

The unit may be equipped (Option 2-C) with a momentary pushbutton that is accessible through the front panel. To prevent accidental operation of this switch, it is recessed behind the front panel of the relay, and is actuated by inserting a thin non-conducting rod through an access hole in the panel. When pushed, the switch operates the output relays and internally operated targets. Current operated targets will activate if the required 0.2 A of minimum current is present.

Power Supply Status Output (Optional)

The power supply status output relay (Option 3-6) has normally closed (NC) output contacts. This relay is energized upon power-up and the NC contacts open. Normal relay operating voltage maintains the power supply status output relay continually energized and its output contacts open. If the power supply output voltage falls below the requirements for proper operation, the power supply status output relay de-energizes, closing the NC output contacts.

Power Supply

The power supply is a low burden, flyback switching design which delivers a nominal ±12 Vdc to internal circuitry. The power supply inputs are not polarity sensitive and a red LED lights to indicate that the power supply is functioning properly.

The Type Y power supply incorporates a field adjustable link to select 48 Vdc or 125 Vdc and is factory set at 125 Vdc. Refer to Figure 3-2 to set field adjustable link.

CAUTION

Damage will result to the power supply and the relay if jumper J4 is not properly installed.

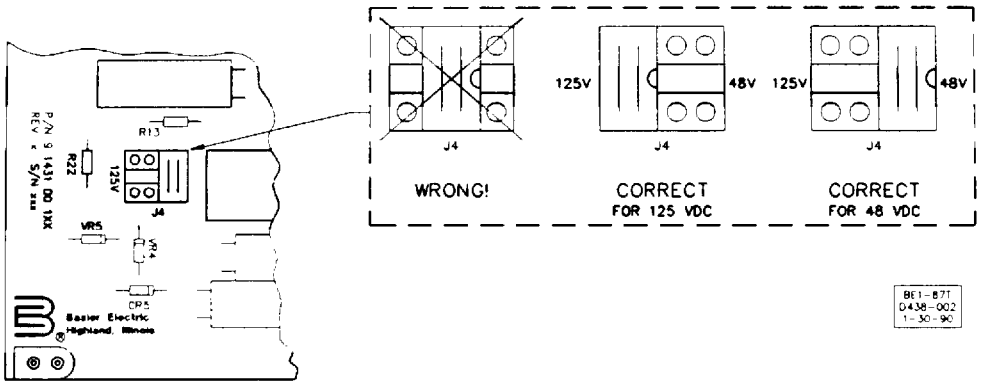

Figure 3-2. Power Supply Type Y Link Position

SECTION 4
INSTALLATION

GENERAL

When not shipped as part of a control or switchgear panel, the relays are shipped in sturdy cartons to prevent damage during transit. Immediately upon receipt of a relay, check the model and style number against the requisition and packing list to see that they agree. Visually inspect the relay for damage that may have occurred during shipment. If there is evidence of damage, immediately file a claim with the carrier and notify the Regional Sales Office, or contact the Sales Representative at Basler Electric, Highland, Illinois.

In the event the relay is not to be installed immediately, store the relay in its original shipping carton in a moisture and dust free environment. When relay is to be placed in service, it is recommended that the operational test procedure (page 4-5) be performed prior to installation.

RELAY OPERATING PRECAUTIONS

Before installation or operation of the relay, note the following precautions:

1. A minimum of 0.2 A in the output circuit is required to ensure operation of current operated targets.

2. Do not touch target indicator vanes. Always reset targets by use of the target reset lever.

3. The relay is a solid-state device. If a wiring insulation test is required, remove the connection plugs and withdraw the cradle from its case.

> **CAUTION**
> To avoid false tripping on three phase units, upper connection plug must be in place prior to inserting or removing lower connection plug.

4. When the connection plugs are removed the relay is disconnected from the operating circuit and will not provide system protection. Always be sure that external operating (monitored) conditions are stable before removing a relay for inspection, test, or service.

5. Be sure the relay case is hard wired to earth ground using the ground terminal on the rear of the unit. It is recommended to use a separate ground lead to the ground bus for each relay.

DIELECTRIC TEST

In accordance with IEC 255-5 and ANSI/IEEE C37.90-1978, one-minute dielectric (high potential) tests up to 2500 Vac (45-65 Hz) may be performed except across open contacts, which may be tested up to 1500 Vac. Note that this device employs decoupling capacitors to ground from terminals 1, 2, 3, 4, 5, and 10. At 2500 Vac, a leakage current of approximately 5 mA per terminal is to be expected.

MOUNTING

Relay

Because the relay is of solid state design, it does not have to be mounted vertically. Any convenient mounting angle may be chosen. Relay outline dimensions and panel drilling diagrams are supplied at the end of this section.

Stabilizing Reactor

The stabilizing reactor for a three phase relay is mounted on the rear of the relay. For projection mounting or convenience, the stabilizing reactor can be removed and relocated. Rewire in accordance with procedures and illustrations in this section. Refer to Figure 4-1 for stabilizing reactor impedance characteristics. To remove the stabilizing reactor, remove four screws holding the reactor to the mounting plate. To remove the mounting plate, remove two five-sixteenths by eighteen, hex head bolts. The stabilizing reactor outline dimensions and panel drilling diagrams are also provided in this section.

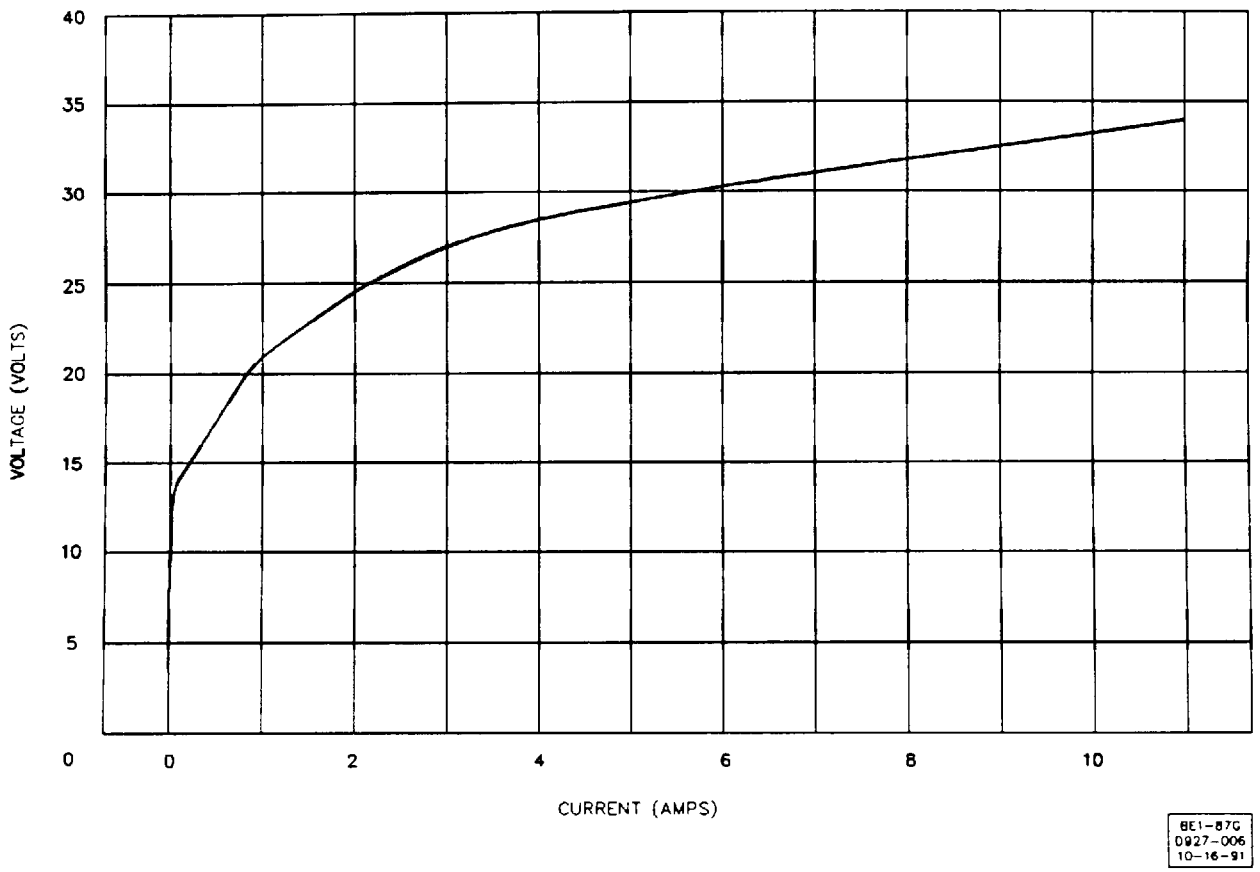

Figure 4-1. Stabilizing Reactor Impedance Characteristics

CONNECTIONS

Incorrect wiring may result in damage to the relay. Be sure to check model and style number against the options listed in the Style Number Identification Chart before connecting and energizing a particular relay.

WARNING

Relays manufactured prior to July 22, 1991 (EIA date code symbol 9129 and previous) do **NOT** have case jumpers between terminals 7 and 8 (single phase units). This also applies to three phase relays terminals 7 and 8, terminals 13 and 14, and terminals 17 and 18. Exercise **CAUTION** when grounding or testing current transformer circuits connected to these terminals.

NOTE

Be sure the relay case is hard-wired to earth ground with no smaller than 12 AWG copper wire attached to the ground terminal on the rear of the relay case. When the relay is configured in a system with other protective devices, it is recommended to use a separate lead to the ground bus from each relay.

Except as noted above, connections should be made with minimum wire size of 14 AWG. Typical external connections are shown in Figures 4-2, 4-3 and 4-4. Terminals 7, 13, and 14 are provided for convenience and to insure compatibility with earlier versions of the relay.

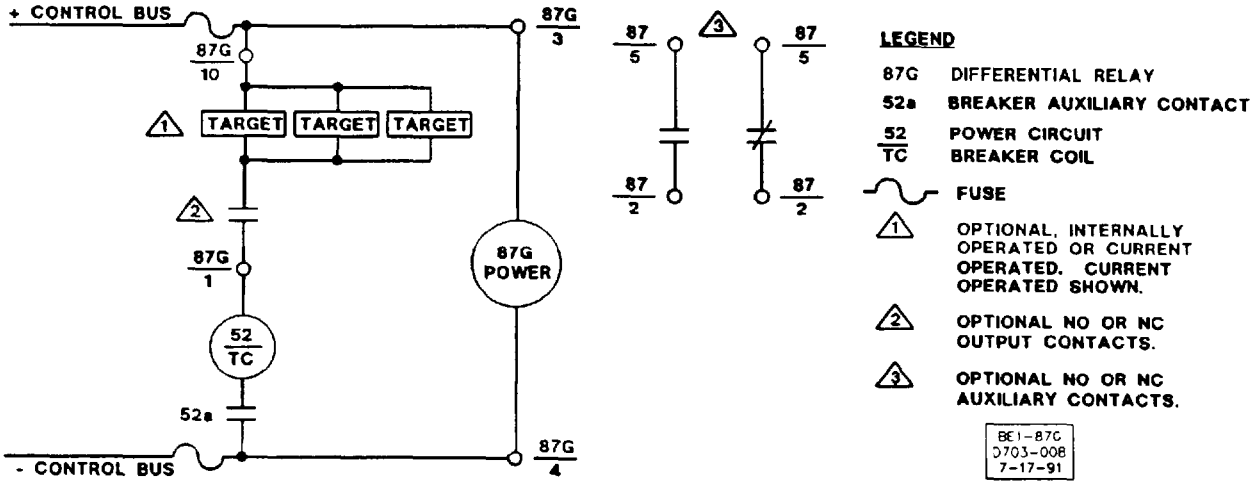

Figure 4-2. Typical External Connections

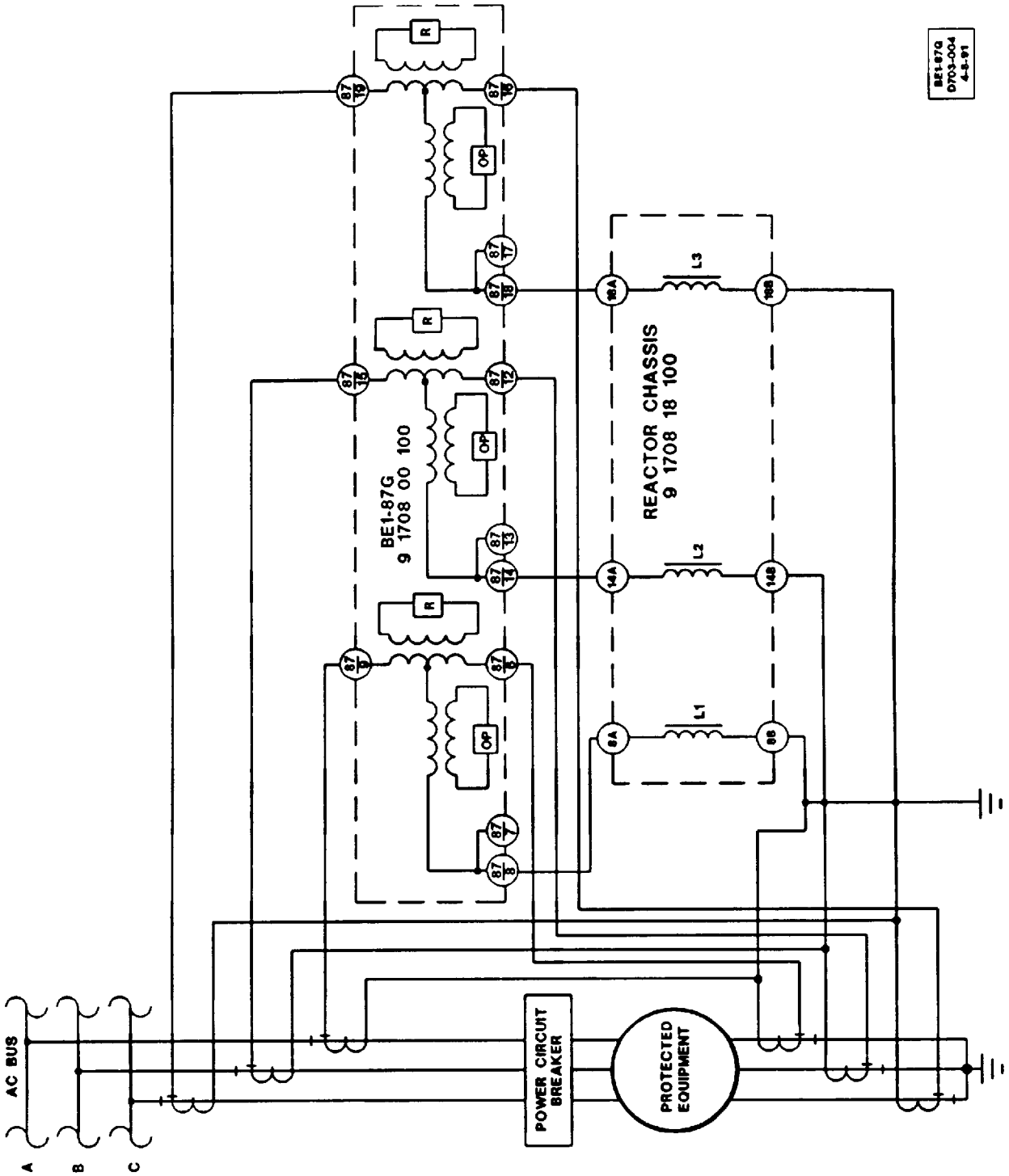

Figure 4-3. Three Phase Sensing Input Connection

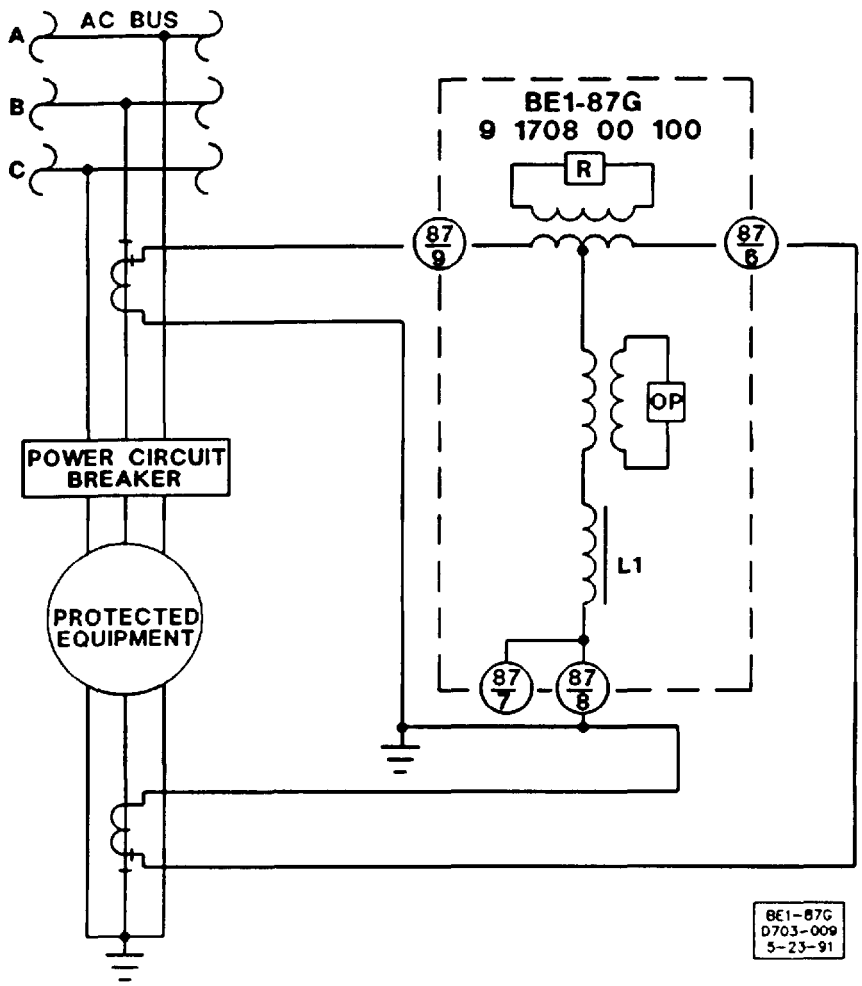

Figure 4-4. Single Phase Sensing Input Connections

OPERATIONAL TEST PROCEDURE

The following procedure verifies operation of the relay. Terminal numbers are referenced to the operational test setup in Figure 4-5. Three-phase units may be tested one phase at a time because all phases are OR'd together at the output.

> **WARNING**
>
> During testing, do **NOT** apply or generate continuous operate current greater than 3 A. If the operate current is greater than 3 A, a temperature increase in the reactor may result and cause insulation breakdown.

Restraint current supplied to any one relay input must not exceed 10 A continuous, or 250 A for 1 second. Whenever 10 A is exceeded, provisions must be made to cut off the sensing current as the relay trips.

Because of the speed and sensitivity of this relay, it is necessary that the accuracy and stability of the test equipment be appropriate to test the settings of the Sensitivity Control. For example, this control at its most sensitive setting of 0.1 A is monitoring a current difference that is only 1% for a sensing input of 10 A.

NOTE

Because of the reactance of the stabilizing reactors, the burden may be too high for large values of operate current with solid state test sets. Stabilizing reactor L1 may be shorted out in single phase relays by placing a jumper on TP-1 and TP-2 on the lower magnetics shield board. The jumper should be capable of carrying 5 A of operate current. Figure 4-6 shows the location of the lower magnetics shield board assembly and Figure 4-7 shows test point locations. In three phase relays, current sources may be connected directly to upper and lower terminals (6-9 and 12-19) to bypass the external reactor chassis.

STEP 1. Test for correct trip and dropout as follows:

a) Set the Differential Sensitivity Switch to A (0.1 A). Apply appropriate power input voltage to terminals 3 and 4.

b) Using a regulated current source that is independently adjustable, apply 1.0 A from the restraint current source to phase A terminals 6 and 9.

c) Slowly increase the operate current source to phase A terminals 6 and 8 until the relay trips. Trip should occur at 0.1 A, ±(5% or 25 mA, whichever is greater.)

NOTE

Output contacts may be NC or NO, depending on style of relay. Check continuity at terminals 1 and 10 with relay tripped and not tripped to assure correct response for the type of contacts specified.

d) Slowly decrease the operate current source until dropout. Reset must occur at a value of current which is greater than 90% of 0.1 A (I_S).

STEP 2. Repeat step 1 for the other pickup settings. If desired, a sufficient number of trip points may be taken to verify any or all of the performance curves shown in Figure 4-9. For $I_R \leq 5$ A, the tolerance is ±(0.05 I_{OP} or 25 mA, whichever is greater.) For $I_R > 5$ A up to a maximum of 20 A of restraint, the tolerance is ±0.08 I_{OP} on characteristic curve or 150 mA, whichever is greater. Refer to Figure 4-9 on page 4-11 and Figure 4-10 on page 4-12 for characteristic curves.

STEP 3. If the relay is of the 3-phase input type, repeat steps 1 and 2 for phases B and C.

STEP 4. If relay is equipped with targets, check for correct operation of each phase when relay is tripped, and for manual reset.

NOTE

If option B (current operated) targets are specified, the target is only operable when a minimum of 0.2 A is present in the output circuit (terminals 1 and 10).

STEP 5. If an Auxiliary output (Option 3-2 or 3-3) is present, check outputs at terminals 2 and 5 (either NC or NO as specified) when relay is tripped.

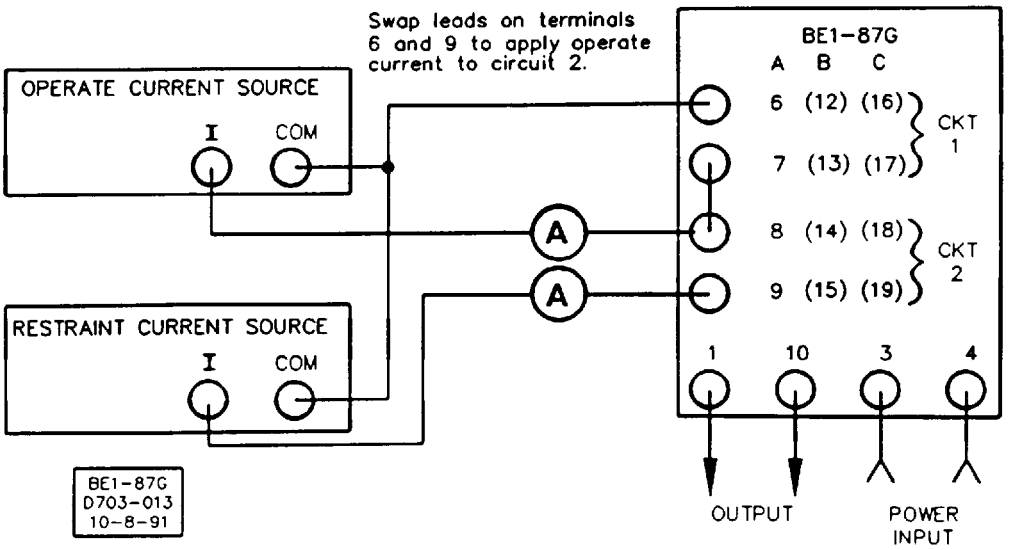

Figure 4-5. Operational Test Setup

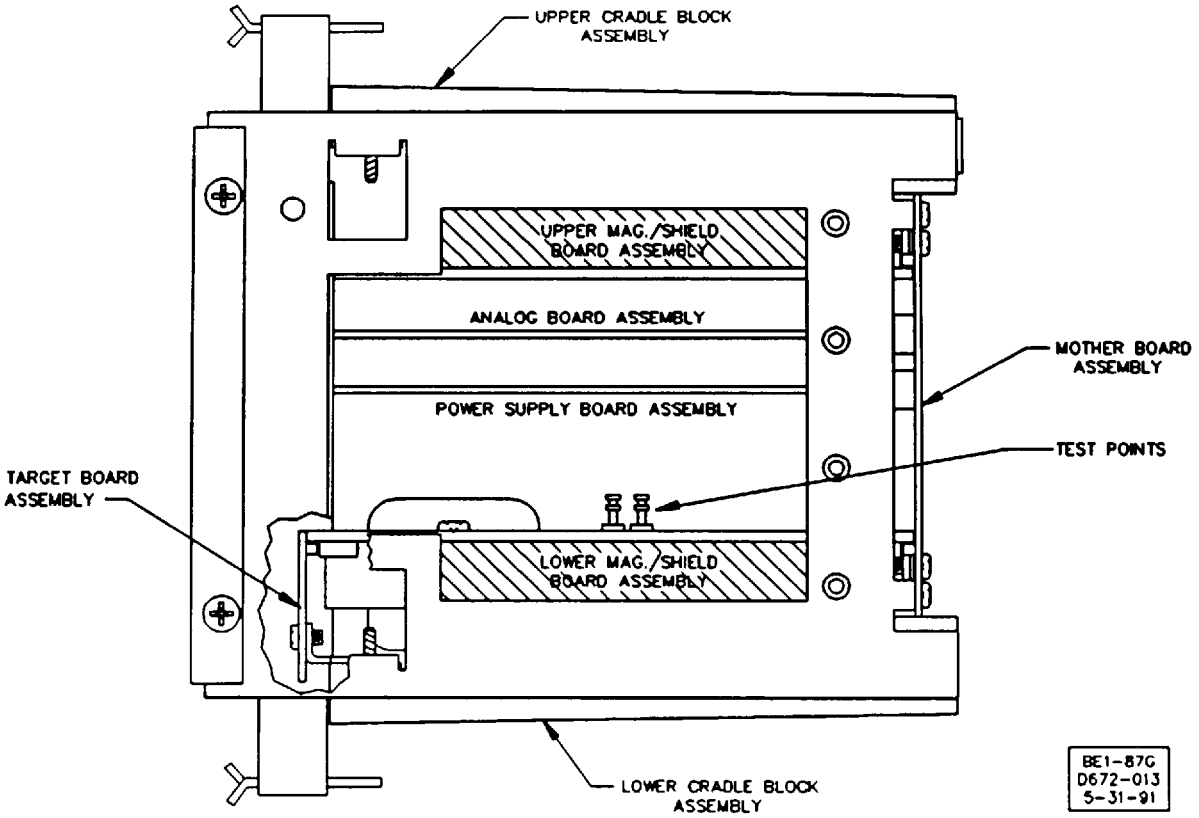

Figure 4-6. Location of Assemblies (Single Phase Only)

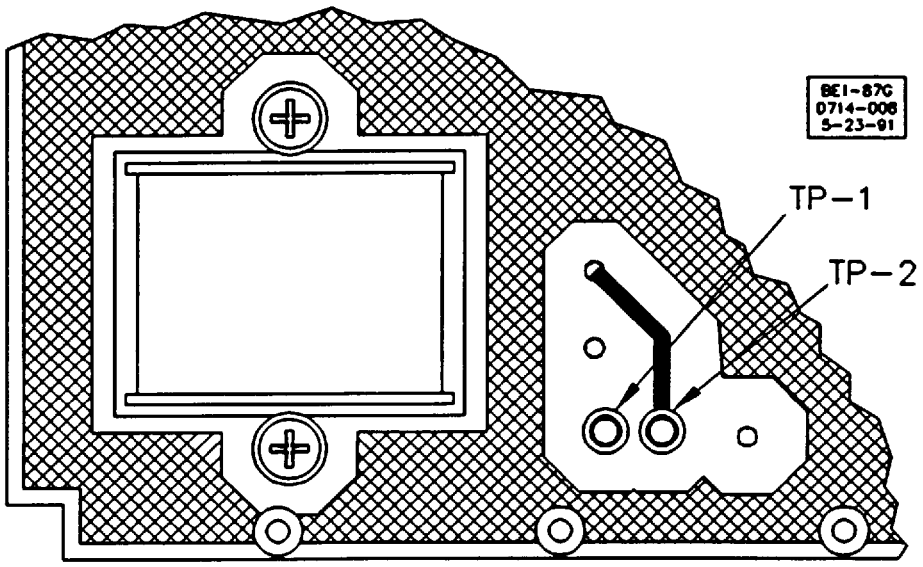

NON-COMPONENT SIDE OF LOWER MAGNETICS/SHIELD BOARD

Figure 4-7. TP-1 and TP-2 on Single Phase Relays

STEP 6. If a Push-to-Energize Switch (Option 2-C) is present, verify correct operation by depressing the switch and observing that the output and auxiliary relays cycle (terminals 1 and 10 and terminals 2 and 5 respectively.)

STEP 7. If Power Supply Status Output (Option 3-6) is present, verify correct operation by applying appropriate voltage to the power input, placing the unit in a powered-up condition, verifying that the power supply status output contacts are energized open (terminals 2 and 5).

STEP 8. Remove input power and verify that the status output contacts close.

SETTING THE RELAY

General

This paragraph provides recommendations for selecting the current sensitivity. Figure 4-9 shows how this setting corresponds to the operating current pickup over the range of 0 to 5 A restraint current.

Assuming that the CTs on both sides of the zone (generator, motor or reactor) perform identically, operating current will be equal to zero. The sensitivity setting serves to accommodate dissimilar CT performance, resulting from differences in CT quality, burden, and core remanence.

During normal operation, the pickup on the flat part of the operating characteristics (refer to Figure 4-9) must exceed the difference in steady-state CT errors. The relay must also override the error differences in the presence of dc components developed by external faults or switching. Currents will be offset during external faults on generator applications, during motor starting, and during switching of shunt reactors.

Out-of-phase synchronizing of machines will also produce offset components. These so-called dc components will produce significant CT saturation. For high-current faults, the relay relies on the 50% slope characteristic to override large operating currents. Significant operating current can also be developed at restraint levels that fall on the flat part of the characteristic if the offset component persists. The sensitivity setting needs to be above this operating current.

Terms for Calculations

N Total number of CT turns

N_a Number of CT turns in use (for multi-ratio type)

R_l One-way lead resistance, in ohms

R_r Relay restraint circuit resistance, in ohms

R_w CT winding resistance, in ohms. If R_w is unknown, assume $R_w = 0.003\ N_a$

R_t Total CT burden $= R_l + R_r + R_w$ (for phase faults and switching)
$= 2R_l + 2R_r + R_w$ (for external ground faults)

Vc CT accuracy-class voltage rating

Vce Effective CT accuracy-class voltage rating = Vc (N_a/N)

SFR Saturation factor ratio = $[(Vce)_1/(Vce)_2]*[(R_t)_2/(R_t)_1]$ (If SFR is < 1, use 1/SFR)

CT Quality

CTs should have an accuracy class of either C20 or better or T20 or better.

Burden Limit

The CTs should be operating below the knee point under symmetrical current conditions --i.e. no "ac saturation". For a generator, ac saturation should not occur for the maximum external fault current. For a motor, ac saturation should not occur during starting. For a shunt reactor, high current fundamental-frequency currents won't flow unless the reactor becomes faulted.

Assuming a maximum current of 20 times CT rating: $\mathbf{R_t < 0.007Vce}$ **(1)**

where V_{knee} = 70% of Vce and 20 X 5 A nominal rating = 100 A so that

$$\mathbf{R_t = V_{knee} / I\ max = 0.7\ Vce/\ 100\ A = 0.007\ Vce}$$

Relative CT Performance

Table 4-1 lists the recommended minimum pickup settings to provide security during external faults and switching.

Table 4-1. Recommended Pickup Settings

Vce (Lower Value)	SFR 1	1.5	2	3	4
20	0.2	0.4	0.5	0.8	1.6
50	0.2	0.4	0.4	0.5	0.8
100	0.2	0.2	0.4	0.4	0.5
200	0.1	0.1	0.2	0.4	0.5
>200	0.1	0.1	0.2	0.4	0.5

Note: Use next higher setting if CTs are a mix of C classification and T classification.

The saturation factor ratio, SFR, represents an index of the relative performance of the two sets of CTs. This performance is a function of the relative quality of the CTs (Vce) and the relative burdens (R_t), neglecting remanence. **If SFR is < 1, then use 1/SFR for SFR.**

Setting Example

Select the pick-up setting for the motor application in Figure 4-8. Since the motor is not grounded, one-way lead burden is used to determine the total CT burden. The relay burden is negligible.

$$(R_t)_1 = R_l + R_w = 0.22 + 0.14 = 0.36 \; ; \quad (Vce)_1 = 50 \; ; \quad R_t < 0.007(Vce)_1 = 0.35$$

$$(R_t)_2 = 0.09 + 0.10 = 0.19 \; ; \quad (Vce)_2 = 100 \; ; \quad R_t < 0.007(Vce)_2 = 0.7$$

Inequality **(1)** is met with CT #2, but not with CT #1. However, since the locked rotor current is only 4.8 times CT rating [vs. the assumption of 20 times rated for inequality **(1)**], the application is suitable.

$$SFR = (100/50)*(0.36/0.19) = 3.8$$

Using the SFR 4 column of Table 4-1, a 0.8 A setting is indicated. However, based on the note accompanying this table, choose the next higher setting of 1.6, because CT #1 has a T classification, and CT #2 has a C classification. The T classification signifies that the CT has significant secondary leakage inductance which somewhat degrades its transient performance. This is a concern during motor starting because a slowly decaying offset component develops in at least one phase.

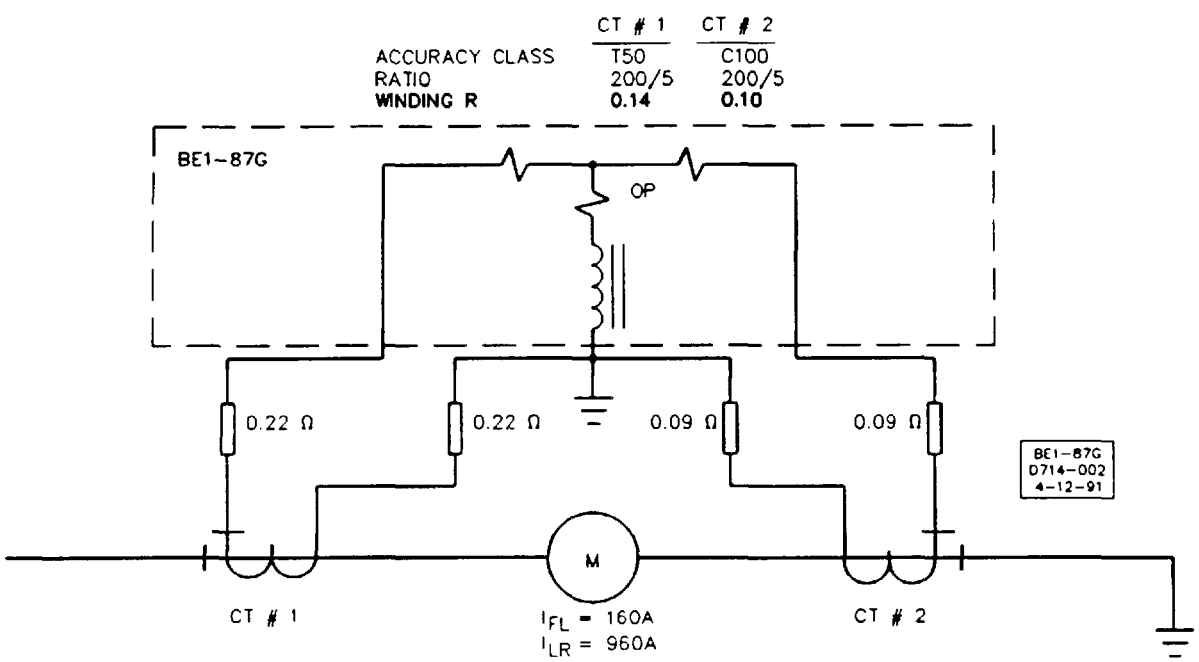

Figure 4-8. Motor Differential Application

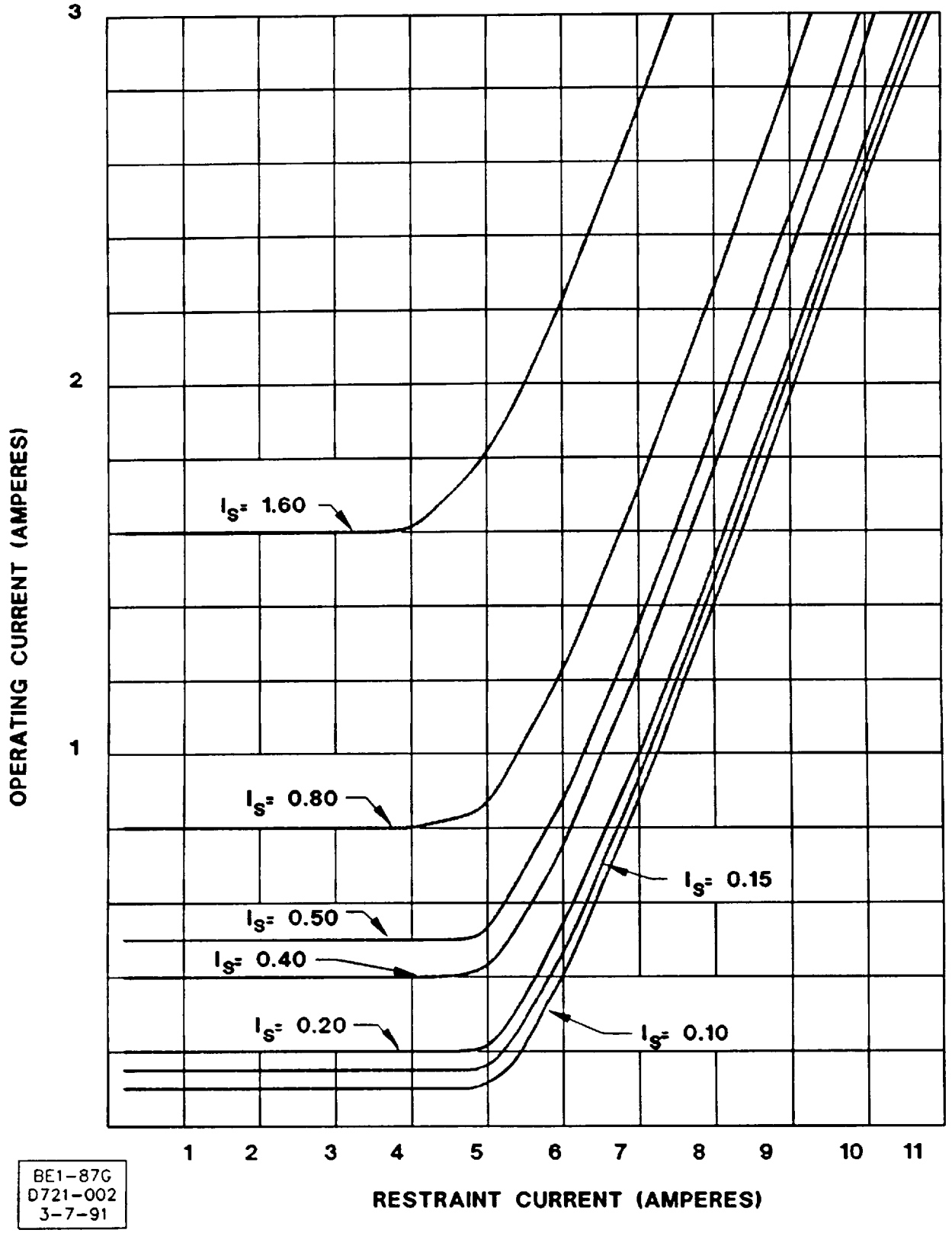

Figure 4-9. Operating Characteristics (Restraint Current is Lesser of Input Currents)

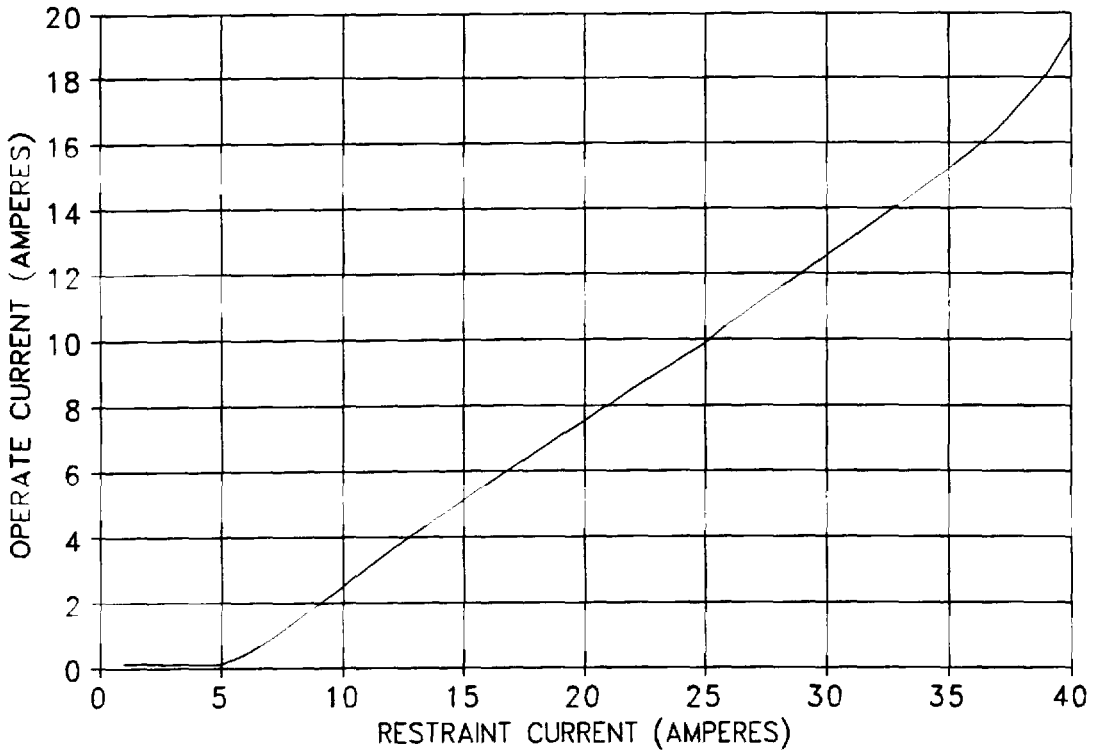

Figure 4-10. Extended Restraint Operating Characteristic (I_S = 0.10 A, I_R = Lesser Current)

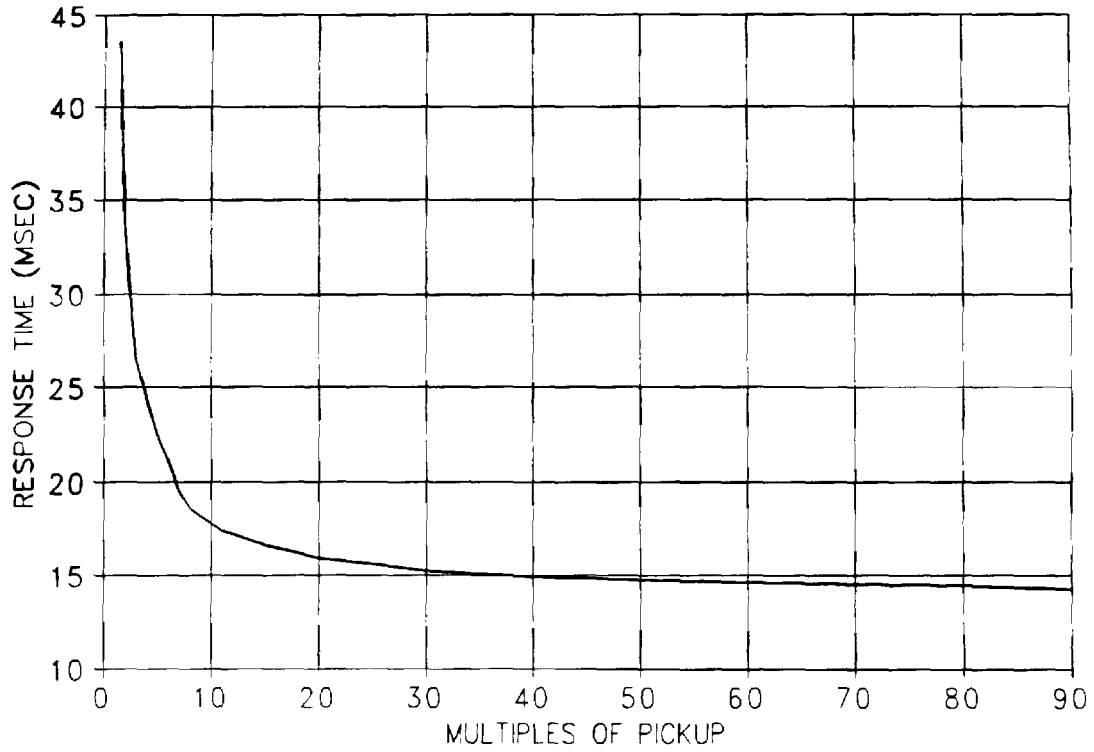

Figure 4-11. Pickup Response Timing

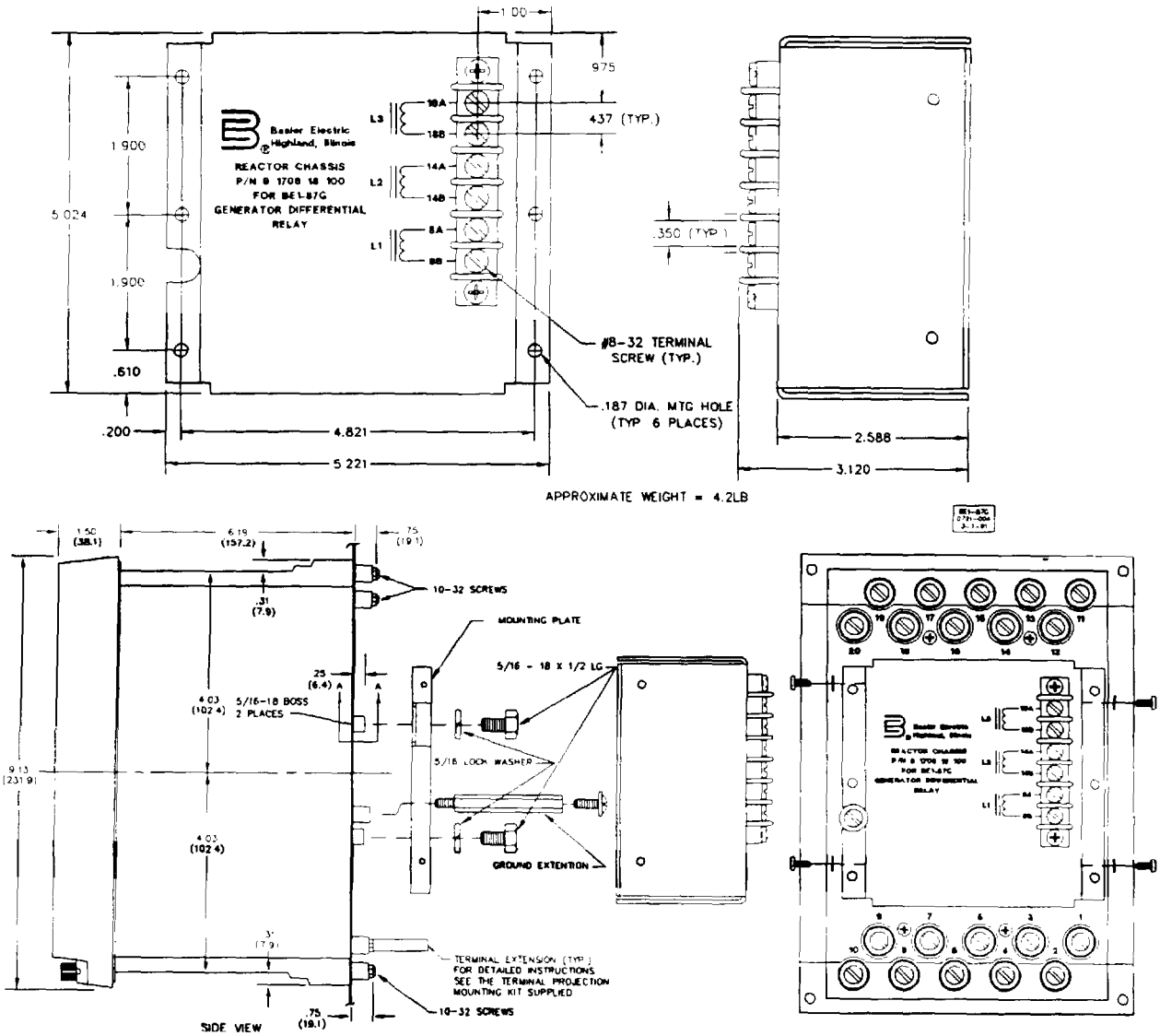

Figure 4-12. Outline Dimensions for External Reactor Chassis 9 1708 18 100 for Three Phase relays.

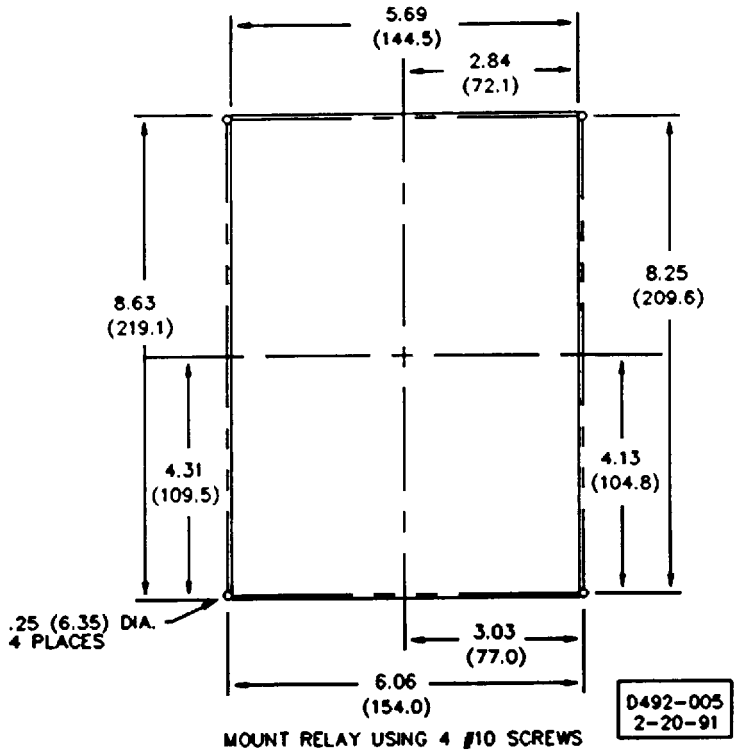

Figure 4-13. Panel Drilling Diagram (Flush Mounting)

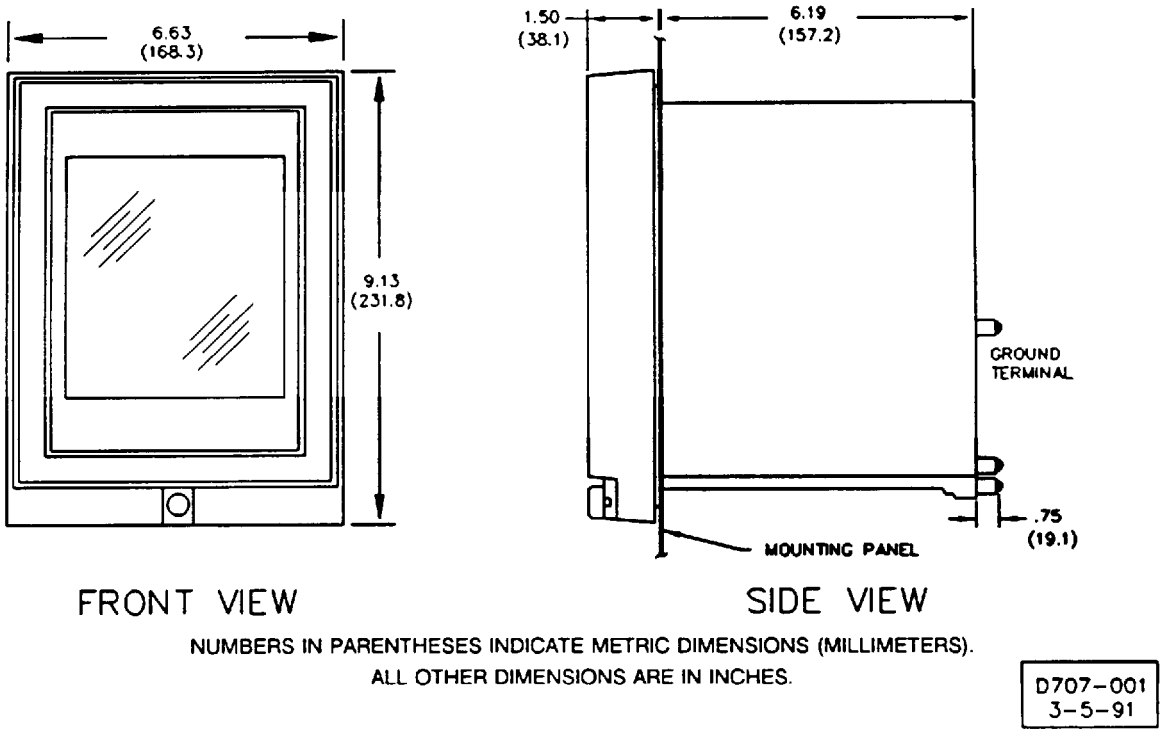

Figure 4-14. Outline Dimensions for Single Phase (Flush Mounting)

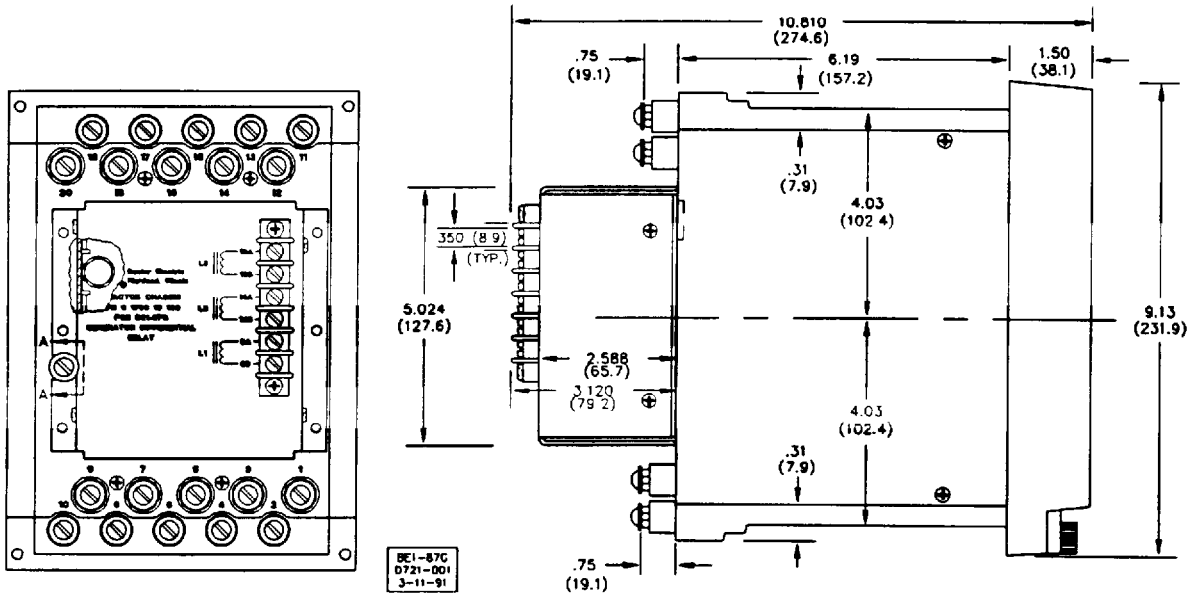

Figure 4-15. Outline Dimensions for Three Phase (Flush Mounting)

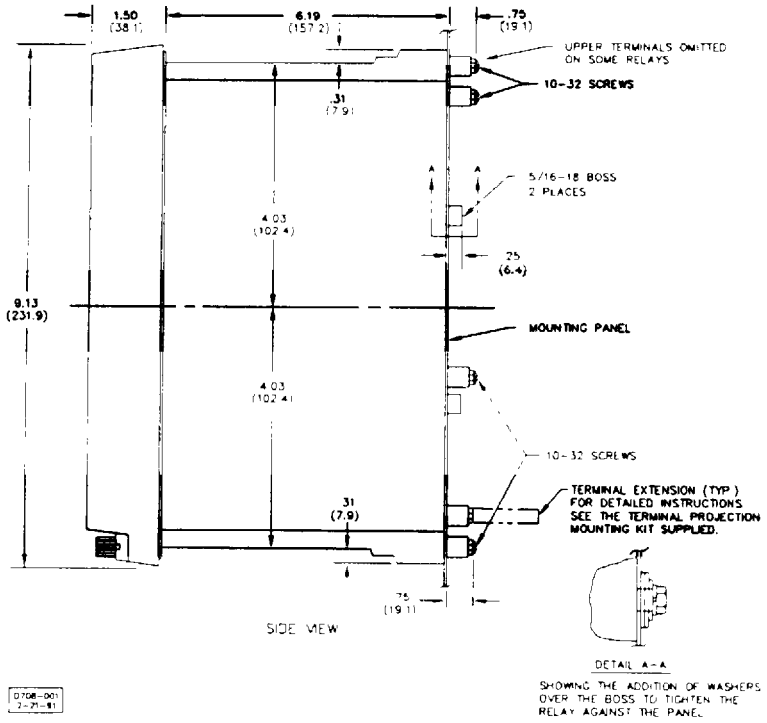

NUMBERS IN PARENTHESES INDICATE METRIC DIMENSIONS (MILLIMETERS).
ALL OTHER DIMENSIONS ARE IN INCHES.

Figure 4-16. Outline Dimension (Projection Mounting)

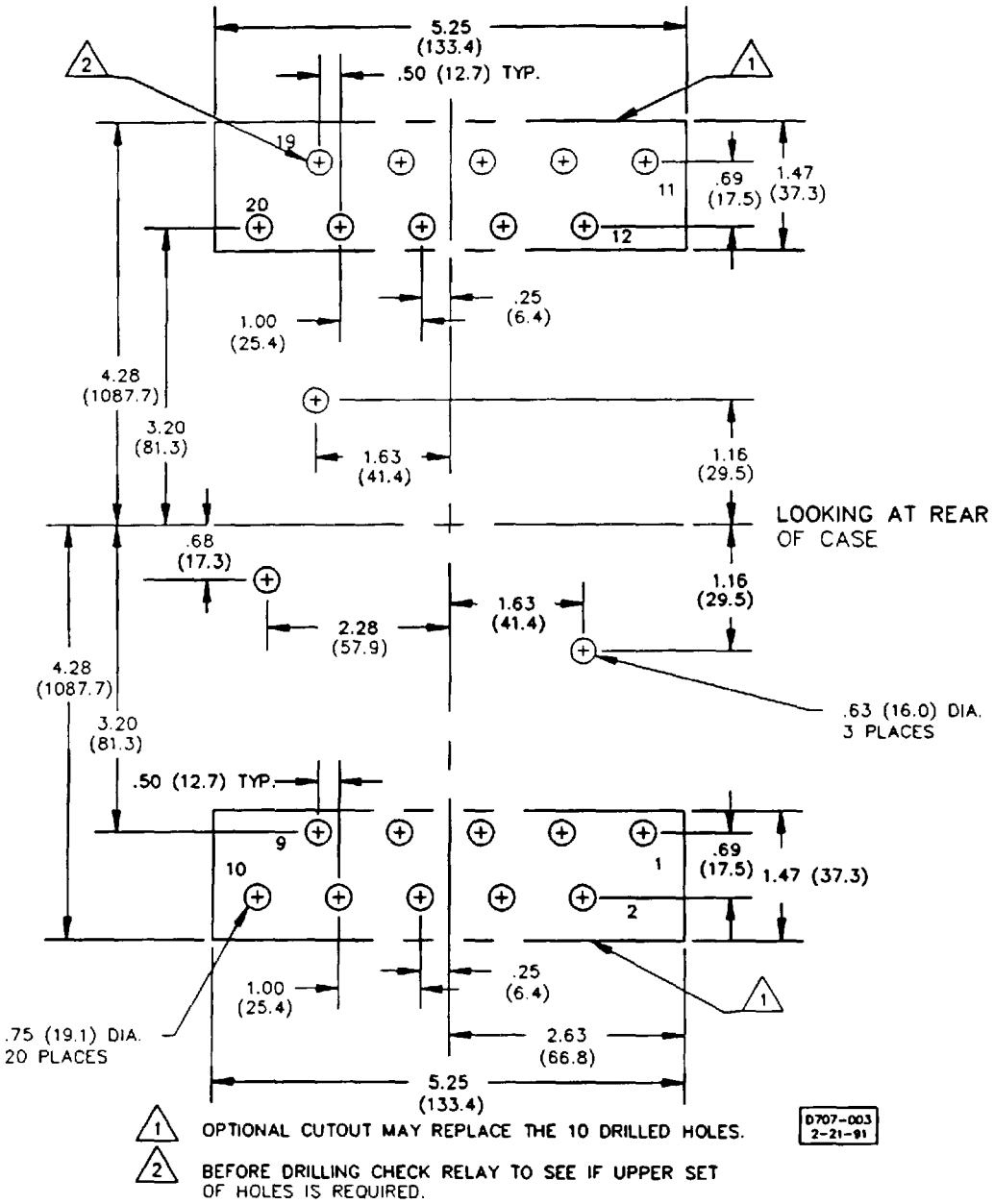

NUMBERS IN PARENTHESES INDICATE METRIC DIMENSIONS (MILLIMETERS).
ALL OTHER DIMENSIONS ARE IN INCHES.

Figure 4-17. Panel Drilling Diagram (Projection Mounting)

SECTION 5
MAINTENANCE

GENERAL

BE1-87G Variable Percentage Differential Relay requires no preventive maintenance other than a periodic operational test (refer to Section 4 for operational test procedure). If the relay fails to function properly, and in-house repair is contemplated, consult the Service Manual (publication number 9 1708 00 620). If factory repair is desired, contact the Customer Service Department of the Power Systems Group, Basler Electric, for a return authorization number prior to shipping.

IN-HOUSE REPAIR

In-house replacement of individual components may be difficult and should not be attempted unless appropriate equipment and qualified personnel are available.

CAUTION

Substitution of printed circuit boards or individual components does not necessarily mean the relay will operate properly. Always test the relay before placing it in operation.

If in-house repair is to be attempted, component values may be obtained from the schematics or the parts list of the Service Manual. Replacement parts may be purchased locally. The quality of replacement parts must be at least equal to that of the original components.

Where special components are involved, Basler Electric part numbers may be obtained from the number stamped on the component or assembly, the schematic, or parts list. These parts may be ordered directly from Basler Electric. When complete boards or assemblies are needed, the following information is required.

1. Relay model and style number
2. Relay serial number
3. Board or assembly
   a) Part number
   b) Serial number
   c) Revision letter
4. The name of the board or assembly.

STORAGE

This protective relay contains aluminum electrolytic capacitors which generally have a life expectancy in excess of 10 years at storage temperatures less than 40° C. Typically, the life expectancy of the capacitor is cut in half for every 10° C rise in temperature. Storage life can be extended if, at one-year intervals, power is applied to the relay for a period of thirty minutes.

SECTION 6

MANUAL CHANGE INFORMATION

Substantive changes in this manual to date are summarized below.

Revision	Summary of Changes
A	Added qualifications to specifications listing, revised isolation test and dielectric test.
B	Grammatical changes to specifications, changed comparator functional description and operational test procedure.
C	Added Power Supply Status Output Option 3-6
D	Physically removed Power ON/OFF switch and added stabilizing reactor. Added illustrations for typical connections, sensing input connections, test setup, extended operational characteristics, and pickup response timing. Added table for current sensing burden and functional description of stabilizing reactor, setting the relay, and setting the relay example.
E	Changed Figure 1-1 and 1-2, and added Warning pages 1-1 and 4-2.
F	Changed pickup accuracy for $I_R > 5$ A from 30 A, ±5% to 20 A, ±8% of the operate pickup characteristic or 150 mA, whichever is greater.
G	Added I^2t rating of Stabilizing Reactor and new Figure 4-1, Stabilizing Reactor Impedance Characteristics.