ABB Power T&D Company Inc.
Relay Divisions
Coral Springs, FL 33065

Instruction Leaflet
40-976

Module Instructions for Type FCB Fiber Optic Interface

Effective: January 1988
NEW INFORMATION

These instructions contain a description, schematic, bill of material, and component location for each of the following FCB modules:

POWER	POWER SUPPLY
INTERFACE	INTERFACE/AMPLIFIER
MODEM	MODULATOR/DEMODULATOR
DTT	DIRECT TRANSFER TRIP
IFO	OPTICAL INTERFACE

CAUTION

Printed circuit modules should not be removed or inserted while the FCB is energized. Failure to observe this precaution can result in an undesired tripping output and/or component damage. In addition, modules should not be interchanged between relays without rechecking calibration.

All integrated circuits used on the modules are sensitive to and can be damaged by the discharge of static electricity. Electrostatic discharge precautions should be observed when handling modules or individual components.

CONSTRUCTION

The FCB modules are designed for insertion into a self-contained, double 3-rack unit, 6.5" wide, FCB chassis. The chassis contains card guides for this purpose.

Module terminations are provided by means of 32-pin Din connectors, which mate with connectors on the backplane module.

Each module contains two ejectors for ease of removal from the FCB chassis, and as bumpers with the chassis front cover to keep modules in proper connection.

MODULE DESCRIPTIONS

POWER----- DIGITAL/ANALOG POWER SUPPLY MODULE
Refer to Figure 1 for the module schematic and Figures 2 (main) and 3 (sub board) for component locations.

All possible contingencies which may arise during installation, operation or maintenance, and all details and variations of this equipment do not purport to be covered by these instructions. If further information is desired by purchaser regarding this particular installation, operation or maintenance of this equipment, the local ABB Power T&D Company Inc. representative should be contacted.

Printed in U.S.A.

The FCB power supply provides + /- 20 Vdc as well as + /- 15 Vdc to power the **FCB** unit. It is a dc to dc converter that provides the **FCB** modules with the required isolation from the station battery. Units are available for 48/60, 110/125, 220/250 Vdc station batteries.

The **POWER** module contains an on/off switch and two LED's on the front panel. With the switch on, the red LED will be turned on to indicate primary side power input. The yellow LED indicates the secondary dc voltages are within their normal operating ranges. A relay on the module is connected in parallel with the yellow LED for alarm purposes and is energized under normal operating conditions. A normally open or normally closed contact of the alarm relay can be selected by a jumper on the module. The yellow LED will turn off and the alarm relay will be activated if any one of the DC outputs deviates from its normal value by an amount not to exceed 10%. There are two fuses mounted on the P.C. board for input surge and overcurrent protection.

Referring to Figure 1, rated dc input voltages are applied to terminals 2C for battery positive and 4C for battery negative, and pass through fuses F1 and F2 and switch SW1. Balun transformer T1 acts to suppress common mode noise on the leads from the battery, and L1, C3, and C5 suppress differential mode noise. D1 protects against accidental battery polarity reversal or transient battery reversal, and C4 stores energy to allow uninterrupted operation even during dc input voltage transients.

Components Z1, R6, R7, C10 and Q4 form an overvoltage protection circuit to prevent damage to the circuit when subjected to prolonged overvoltage. Whenever the input voltage becomes too great, Z1 conducts turning on Q4 which disables the gate of the main switching transistor Q1 through IC1, Q2, Q3, and R30.

When input dc voltage is applied, LED2 is illuminated on the front panel to indicate the presence of the correct operating input voltage. At this time, the startup oscillator applies a 25 kHz switching signal to pin 2 of IC1. This signal is cascaded through IC1 and applied to transistors Q2 and Q3, which provide a low impedance source and sink to drive the gate of mosfet transistor Q1. Components C6, D2, and R2 form a circuit which allows core recovery of transformer T2, and zener diode Z2 prevents excessive voltage from appearing at the drain of Q1.

Resistor R4 operates as an overcurrent sensor. When an overcurrent condition occurs at a level determined by the adjustment of potentiometer P1 in the overcurrent memory circuit, the voltage across R4 biases transistor Q5 on which in turn "sets" flip flop IC2. The gate of mosfet Q1 is immediately disabled through IC1. The flip flop will remain "set" until the arrival of the next switching pulse from the pulse width modulator IC5. The arrival of the next pulse will "reset" the flip flop and allow the mosfet to conduct again. If the overcurrent condition still exists, the flip flop will be "set" once more. As a result, the mosfet will be switched on and off until the overcurrent condition is removed.

The secondary voltage is rectified by diodes D4 and D5 for the negative supply and by D6 and D7 for the positive supply. Filter circuits L2, C16 and L3, C19 produce the final supply voltages. During initial power up the +20V voltage rises on the secondary and charges capacitors C23 and C24 through D8 on the lower portion of the schematic. When this voltage rises above 13 volts, Z6 conducts turning on transistors Q6 and Q7. Q6 turns on optical isolator IC4 which disables the startup oscillator and, at the same time, Q7 conducts which enables the pulse width modulator IC5 to produce a switching signal at IC3. The signal from the pulse width modulator replaces the signal from the startup oscillator, and is adjusted to 27.5 kHz by potentiometer P2.

The +20V output voltage level, which is indirectly controlled by IC5, is adjusted to 20 volts by potentiometer P3. The +15V output follows the +20V output through voltage regulator IC8. The -20V output voltage level tracks the +20V output voltage level through op amp comparitor IC6 which biases shunt regulator Q8 in order to regulate the -20V output. The -15V output follows the -20V output through voltage regulator IC7.

The output voltages of the power supply are monitored for over and under voltage conditions. The over and undervoltage is sensed by op-amp circuit IC9. When an unfavorable voltage level exists, pins 1, 2, 13, or 14 of IC9 will go low, removing the base drive of Q9 and causing output LED1 to turn off, and a contact of alarm relay K1 to open or close, depending on the position of the RP LINK. Also, when at least one output of IC9 goes low, Q10 is turned on causing the value of the PSME voltage level to drop from a value greater than 9V to a value less than 4V.

INTERFACE---INTERFACE/AMPLIFIER MODULE
Refer to Figure 4 for the module schematic and Figure 5 for the component locations.

The **INTERFACE** module provides comparison between the remote and HCB quantities to produce the local quantity (**VL**) for modulation, remote signal filtering and amplification, power-up/down control circuitry, local or remote target reset circuitry, logic and links for various trip options on loss of channel or receipt of direct transfer trip, and **SETUP** signal buffering.

(Reference Bottom Half of Figure 4)
The HCB pilot wire output enters the **INTERFACE** module through Pins 26A and 24C. The remote signal, **VR**, enters the module at Pin 18A where it is filtered and amplified to produce the VRF quantity at Pin 14A. These two signals are compared through a 70 ohm resistor (R59) and a summing amplifier (IC2) to produce the local quantity, **VL**, at pin 14C. This VL quantity goes to the **MODEM** module for modulation of the carrier.

Upon entering the **INTERFACE** module, at terminals 26A and 24C, the HCB pilot wire input passes a series of relay contacts. The K1A and K1B1 contacts allow HCB trip block or overcurrent trip on a loss of dc condition. Selection of either trip or block trip is performed through the **LOPC** link on the module. On normal power conditions, the K1 relay is picked up (top of schematic). Therefore, the K1A contacts are closed, and the K1B1 contacts are open. If loss of dc occurs, the K1 relay drops out, the K1A contacts will open, and, if the **LOPC** link is set to **"BLK"**, the K1B1 contacts will close to block HCB trip by shorting the HCB operating coil at HCB 18 and 19 (**INTERFACE** module terminals 26A and 24C). With the **LOPC** link set to **"OCT"**, on loss of power, the opening of the KA1 contacts will cause an impedance of 3.01K ohms (R60) to be placed across the HCB operating coil, at HCB 18 and 19, and thus HCB overcurrent trip is allowed.

(Reference Top Half of Figure 4)
On power up, signal **PSME**, from the **POWER** module, goes high. This will activate a 2.5 second operational amplifier timer consisting of R3, R4, Q1, IC4, R5, R6, C2, R8, R7, & R9. Capacitor, C2, will begin to charge through resistors R5 and R6. Before the op-amp reference level is reached, TP2 remains high to keep transistor Q2 off and thus maintain the K1 relay dropped out. With K1 dropped out, contacts K1B2 (middle half of schematic - connected to IC6 and TP14) will be closed. This will hold the control input, pin 5, of the IC6 bilateral switch low, thus keeping the switch open. The VR signal will be blocked from appearing at IC7 pin 5. On power up conditions, this will prevent transmission to the remote terminal for 2.5 seconds until circuits have stabilized. A high on TP2 will also turn Q3 on and thus outputs **RST**, at module terminal 18C, and **TB**, at module terminal 20C, will be low. **RST** will keep all LED indicators reset, and **TB** will block DTT trip until 2.5 seconds have elapsed.. Once the capacitor voltage reaches the reference level at the non-inverting input of the op-amp, in 2.5 seconds, TP2 will go low to turn Q2 on and thus pick up the K1 relay. With TP2 low, Q3 will be off and thus the **RST** and **TB** signals will be high.

For local reset of LED indicators, the **INDICATOR RESET** (S1) pushbutton switch is used (top right of schem.). With this switch depressed, the **RST** signal, terminal 18C, will be shorted to common, and thus will be low, to reset all LED indicators.

Remote reset of LED indicators is also provided on the **INTERFACE** module. A remote voltage input at **FCB** terminals 13 and 14 enters the **INTERFACE** module, at Pins 26C and 28C, through a voltage-selectable optically-isolated input buffer (top left of schem.). This input will turn on the transistor of an optical isolator, IC3, causing its output at TP1 to go low. A low of TP1 will produce a low at TP3, and thus at **RST**, terminal 18C.

(Reference Middle and Bottom Half of Figure 4)
On loss of channel or receipt of direct transfer trip, relays K2, K3, and K4 provide various trip options through the **LOCC** and **DTTC** links respectively. On loss of channel, signal **EN** (module terminal 4A - middle left of schem.), from the **IFO** module, goes high. If the **LOCC** link is set to **"BLK"**, the high **EN** signal will appear at pin 5 of IC8 causing a high at TP9 to pick up the K2 relay. The K2 relay contacts (bottom left of schem.) will close, thereby shorting the operating coil at HCB 18 and 19 (**INTERFACE** module terminals 26A and 24C). This will block HCB trip. For the **"OCT/TX"** position of the **LOCC** link, the **EN** high signal will appear at pin 8 of IC8, causing a high at TP10, to pick up the K4 relay. The K4B relay contacts (bottom left of schem.) will open. This will remove the loading effect of the R59 (70 ohms) resistor, thereby allowing the HCB to trip in the overcurrent mode. Also, the HCB operating quantity will appear at the **VL** test jack (terminal 14C) for transmission to the remote terminal. For the **LOCC** link set to **"OCT/NX"**, the high **EN** signal will appear at pin 1 of IC8. This will cause a high at TP11, to pick up the K3 relay. The K3B relay contacts (bottom left

of schem) will open. This again isolates R59, allowing the HCB to trip in the overcurrent mode. The opening of the K3B contacts also prevents the HCB operating quantity from appearing at the VL test jack, terminal 14C, thereby restraining any modulating signal.

Signal DTR, module terminal 12A, (middle left of schem.) will be high on receipt of a direct transfer trip signal. It initiates the same HCB trip and transmission options, on receipt of transfer trip, as the EN signal does on loss of channel. A high at DTR will cause a high at pin 6 of IC8, if the DTTC link is set to "BLK". This will cause a high to appear at TP9 to pick up the K2 relay. If the DTTC link is set to "OCT/TX", the high signal at DTR will appear at IC8 pin 9, and thus at TP10 to pick up the K4 relay. For position "OCT/NX" of the DTTC link, the DTR high signal will appear at IC8 pin 2 causing a high at TP11 to pick up the K3 relay. The same sequence of contact closures will occur as described for the EN signal in the previous paragraph.

The EN and DTR signals are OR'ed through IC8 pins 12 and 13.
If either signal is high, the IC6 bilateral switch, with pins 13, 2, and 1 will close causing IC6 switch, with pins 3, 4, and 5 to open by shorting its control input (pin 5). The opening of this switch will prevent the filtered VR signal from being amplified and appearing at VRF, terminal 14A. Thus on loss of channel or receipt of direct transfer trip, the remote quantity is blocked and VRF is zero.

The SET UP test jack on the INTERFACE module is used for field setup procedures, where it is connected to the SET UP test jack on the MODEM module for signal level equalization.

MODEM ------- MODULATOR/DEMODULATOR MODULE
Refer to Figure 6 for the module schematic and Figure 7 for component location.

The MODEM module contains the modulator and demodulator for transmission and detection of the FCB communicated signal. The modulator generates the 20 KHz carrier signal. It contains the circuitry to provide modulation of the carrier signal by the local quantity, VL, received from the INTERFACE module. The output of the modulator goes to the IFO module for transmission to the remote terminal.

(Reference Top Half of Figure 6)
Operation of the modulator is as follows. The VL quantity from the INTERFACE module enters the MODEM module through pin 14C, where it varies the dc potential on the non-inverting input (TP1) of an operational amplifier (IC3), which is basically a comparator. The inverting input of the IC3 comparator at TP2, is connected to a capacitor, C15. This capacitor is charged by means of a constant current source, composed of an op-amp, IC3 (pins 5, 6 and 7) and a transistor Q2. For no modulation (VL is zero volts), the TP1 voltage is approximately 8.5 volts dc. When C15 charges to this voltage level, the output of the comparator (IC3 pin 8) will go low. The latch, composed of IC1 nand gates with output pins 3 and 10, will be set with this low signal, and consequently, TP3 will be high and IC1 pin 10 will be low. The low at IC1 pin 10 will cause TP4 to be high. This high goes to a bilateral switch (IC2 with pins 3, 4, and 5), to close it and thus rapidly discharge the C15 capacitor. When C15 discharges to near zero (the reference at IC3 pin 2), IC3 pin 1 will go low. This low also appears at IC1 pin 9, and will cause IC1 pins 10 and 2 to go high. Since the C15 capacitor voltage has discharged to less than the 8.5 volt reference at TP1, IC3 pin 8 will be high, and thus IC1 pin 1 will also be high. The high input at IC1 pin 1 and the low input at IC1 pin 9 will reset the latch, which causes TP3 to go low and IC1 pins 10 and 6 to go high. The low at TP3 will trigger a one-shot circuit, composed of transistor Q1, capacitor C13, and resistors R13 through R17. Once the C13 voltage reaches the threshold of the IC1 nand gate (pin 5) TP4 will go low to allow the C15 capacitor to charge once again. The time constants are designed so that TP4 remains low for approximately 4 microseconds to ensure total discharge of C15.

The sequence of signals described above results in a frequency of about 40 kHz at TP3 and at IC1 pin 10. This frequency is divided by two through a binary counter, IC4, to produce a 50 percent duty cycle 20 kHz square wave at IC4 pin 9. After buffering, the 20 kHz square wave appears at the RFO test jack, module terminal 30C.

Now, when the VL modulating signal is a 50/60 Hz waveform, the dc level at TP1 will vary, thus causing the trigger level of the IC3 comparator to vary. The C15 capacitor charging voltage will change for different points on the VL waveform. This will vary the frequency at TP3 and hence at the RFO test jack and terminal 30C. Thus, the frequency of the signal at TP3 depends on the magnitude and polarity of the VL waveform, since for a fixed quantity of charging current and capacitance, it will take the C15 capacitor a certain amount of time to charge to the comparator level at TP1. As the VL

signal goes more positive, the period at TP3 increases and vice versa. This variation of the period of a pulse waveform by another signal is known as pulse-period modulation. The **RFO** frequency is adjustable through potentiometer, P1, **FREQ. ADJ.**, at the front of the module (top center of schem.). This potentiometer varies the constant current source and therefore the period of the **RFO** signal.

The IC4 binary counter also generates a 39.1 Hz pulse train (IC4 pin 14) which is shifted in dc level to produce a $\pm$ 12V, 39.1 Hz square wave **SET UP** signal at the **SET UP** test jack and at module terminal 2A. In field set up procedures, this waveform provides a signal of known frequency and magnitude to be used for modulation.

The **PSME** signal from the **POWER** module enters the **MODEM** module at pin 8A (top left of schem.). For normal power supply conditions, this signal is high. This will keep a switch, IC2 pins 6, 8, and 9 closed, to allow the **RFO** quantity to pass. For abnormal power supply conditions, **PSME** will be low, thus opening the switch and forcing the **RFO** signal to zero.

The demodulator receives information from the **IFO** module and reconstructs the remote quantity, **VR**, for comparison in the **INTERFACE** module. The demodulator is basically a capacitor charged by a constant current source, a circuit that samples and holds the capacitor voltage, and a reset circuit that discharges the capacitor. Its operation will be described in the paragraph that follows.

(Reference Bottom Half of Figure 6)
The demodulator operates in a similar fashion to the modulator. A constant current source composed of IC7, (pins 5, 6, and 7) transistor Q4, and resistors R44 through R48, is used to charge a capacitor C24, which in turn is controlled by a bilateral switch IC8 (pins 3, 4, and 5). The remote signal, **RFI** from the **IFO** module enters the **MODEM** module at pin 22C. For no modulation, the incoming **RFI** frequency is a steady 20 kHz square wave. 300 nanosecond pulses are generated on every low-going edge of the **RFI** signal, through a one-shot circuit composed of nand gates (IC5), capacitor (C20), and resistors R40 through R42. The 300 nanosecond pulse initiates the operation of two circuits. First, it goes to a sample and hold circuit consisting of IC8 (pins 1, 2, and 13), C26, IC7 (pins 2, 3 and 1) and R50. This circuit samples the capacitor ramp voltage output at TP7, by closing the IC8 bilateral switch for 300 nanoseconds and transferring the voltage information to TP8. The 300 nanosecond pulse, on its negative edge, triggers a one-shot circuit IC6 (pin 11), R43 and C21, which produces a 30 microsecond pulse. This pulse in turn closes bilateral switch IC8 (pins 3, 4, and 5) for that period of time, allowing capacitor C24 to fully discharge. In essence, C24 is allowed to charge for a time equal to its period minus 30 microseconds. The capacitor charges linearly and its level is sampled for 300 nanoseconds just prior to discharge.

For a steady 20 KHz **RFI** signal (no modulation), the capacitor charging time is 50 microseconds minus 30 microseconds, or 20 microseconds. The ramp voltage at TP7 will have a constant peak because the charging time of the C24 capacitor is a constant. TP8 will be a constant dc level, and since capacitor C27 blocks the dc component of the TP8 signal, the output at the **VR** test jack, or module terminal 18A, will be zero volts.

For a modulated **RFI** signal, the capacitor charge time will vary with frequency. The higher the **RFI** frequency (the shorter the period), the less time the capacitor will have to charge, and therefore, the lower its voltage will be. Just the reverse will occur for lower **RFI** frequencies. Therefore, a pulse-period modulated **RFI** signal will cause the output of the demodulator at the **VR** test jack to be an ac signal. For 50/60 Hz and 100% modulation, the signal at the **VR** test jack will be 10V peak, at 50/60 Hz. The demodulator gain is adjustable through potentiometer P2, **DEMOD GAIN ADJUST**, at the front of the module (bottom right of schem.). This varies the gain of a non-inverting amplifier, composed of IC7 (pins 12, 13, and 14), P2, and resistors R51 through R53.

DTT — DIRECT TRANSFER TRIP MODULE
Refer to Figure 8 for the module schematic and Figure 9 for component locations.

The optional **DTT** module provides a direct transfer trip function utilizing the same channel as that employed for the **FCB** relaying function. The **DTT** module contains the circuitry for detection and recognition of the transfer trip signal from the remote terminal, as well as for its local initiation.

(Reference Top Left of Figure 8)
The **VR** signal enters the **DTT** module at terminal 18A. If the frequency of this signal is the DTT frequency, approximately 2525 Hz, it will pass through a bandpass filter. Following this, a level detector converts the sinusoidal signal into a square wave, for input into an edge detector. The edge detector doubles the frequency to 5050 Hz, at TP4, by producing a pulse on every half cycle of the input signal. The negative-going edge of the TP4 signal will trigger a 120 microsecond one-shot (IC5 pin 5). A second one-shot (IC5 pin 11) of 240 microseconds will be retriggered since the period of its input signal at TP5 (200 microseconds) is less than its pulse width. Thus, TP6, the output of the 240 microsecond one-shot, will be constantly low, allowing operation of a ripple counter/oscillator (IC8). After 5 milliseconds have elapsed, the output of the counter, at pin 4, will go high. This produces a high at the **DTT TRIP** test jack, and at module terminal 14C, which picks up relay K1, and closes a normally open pair of contacts, **DTTC1**, module terminals 26A and 28A, for DTT tripping. The high signal from the **DTT TRIP** test jack will be delayed by about 8 milliseconds by a delay circuit consisting of IC6, C19, and R34. After this time, TP9 becomes high to turn on transistor Q1 and the LED indicator, **DTT TRIP**. Latch IC3 allows the **DTT TRIP** indicator to be sealed in, if link **IDK** is set to "**SEAL**". With the seal-in feature, the LED will remain on after receipt of direct transfer trip is lost.

The 120 microsecond one-shot signal (200 microsecond period) at TP5 will also appear at AND gate IC6 pin 2, and since the other input to the IC6 AND gate (pin 1) is constantly high, the TP5 signal will appear at TP7. This is the input to a 1 millisecond one shot (IC7) which will be retriggered, since the period of its trigger input at TP7 (200 microseconds) is less than the 1 millisecond pulse width. Thus the 1 millisecond one-shot output at module terminal 12A, **DTR**, will be constantly high.

If the input frequency at module terminal 18A, **VR**, is greater than about 4167 Hz, the period at TP4 will be less than the 120 microsecond one-shot pulse width, and it will retrigger the one shot, causing its output at TP5 to be continuously high. The 240 microsecond one shot will never be triggered, and its output at TP6 will be a constant high. This high goes to the reset line of the trip timer, thus preventing its operation and maintaining TP8 low to block trip. Also, since the 240 microsecond one-shot is not triggered, its output at pin 1 of IC6 will be low, causing TP7 to be low. Hence, the 1 millisecond one-shot will not be triggered and its output at module terminal 12A, **DTR**, will be a constant low.

For **VR** frequencies lower than about 1389 Hz, the period at TP4 will be greater than 360 microseconds and the 120 microsecond one shot will be triggered. Consequently, the 240 microsecond one shot will be triggered. TP7 will go high if and only if the 240 microsecond one shot input goes back high while its output is still high. This will occur only if the TP4 period (and thus the TP5 period) is less than about 360 microseconds. For TP4 periods greater than 360 microseconds, the AND gate output at TP7 will be a constant low. Thus, frequencies lower than approximately 1389 Hz will not produce an output at TP7, and thus will not trigger the 1 millisecond one-shot, causing the output at terminal 12A **DTR**, to be a continuous low. Also, the trip timer will not be allowed to operate since its reset line at TP6 is not low for a minimum of 5 milliseconds.

(Reference Bottom Left of Figure 8)
Two signals will block direct transfer trip: **CA** and **TB**. When a loss of channel condition occurs, signal **CA**, module terminal 6A, goes low. This will disable all the one-shot circuits, and therefore, will block transfer trip. On power up conditions, signal **TB**, trip block on power up (module terminal 20C), will be low. This low will block DTT trip through IC6 pin 9.

(Reference Upper left of Figure 8)
A voltage input (15V, 48V, 125V or 250V dc) at module terminal 26C and 28C will turn on the transistor of an optical isolator, IC1. This in turn will pull terminal 6C, **DTI**, low. It will also activate an LED, **DTT KEY**. The **DTT KEY** LED can be selected for seal or for non-seal, through link **IDT**. The seal feature, accomplished through latch IC3, will keep the **DTT KEY** LED on after voltage input at terminals 26C and 28C is removed.

(Reference Bottom Left of Figure 8)
A low-going signal, **RST**, module terminal 18C, goes to latch IC3, pins 1 and 13. If low, the **RST** signal will reset the **DTT TRIP** and **DTT KEY** LEDs.

IFO ——— OPTICAL INTERFACE MODULE
Refer to Figure 10 for module schematic and Figure 11 for component locations.

The **IFO** module contains both the transmit and receive interface to fiber optic cable. 850 nm and 1300 nm wavelength options are available.

(Reference Bottom Left of Figure 10)
The transmitter consists of a transistor driver circuit that turns an optical LED on and off at the frequency of the modulator output, **RFO**. The light signal from the LED emitter will be sent over fiber optic cable to the remote terminal.

When the **RFO** signal, module terminal 30C is low, transistor Q2 is off, and current from the +20 Vdc through resistors R59, R60, R61 and R62, will flow through **OT-1**, the infrared emitter. The LED will emit light at a certain level (dBm), depending on the type of optical fiber employed. When the **RFO** signal is high, transistor Q2 is on, and the current will now flow through Q2, instead of through the infrared emitter, hence turning it off.

The optical receiver is composed of a pin photodiode detector, **OR-1**, and a high gain transimpedance amplifier circuit, IC1 and associated components, for converting the light signal into a voltage quantity. Following this conversion, a gain circuit, IC2 and associated components, amplifies the voltage quantity for input to a bandpass filter. This filter will allow only the carrier frequency (18 to 22.5 kHz) to pass. The output of the filter goes to an automatic gain-control circuit utilizing a transconductance amplifier, IC4. The current output of the AGC, at IC4 pin 6, is converted into a voltage quantity, by an operational amplifier circuit (IC5, R24, C43). This voltage is input to a half-wave rectifier circuit (IC5 Pins 5, 6, and 7, R26, R25, C29 and D3). The output of this circuit, a negative voltage, appears at the **AGC** test jack and test point TP2. This negative dc level is fed back to the **AGC** circuit, at pin 5 of IC4, where it is used to maintain the **AGC** output fairly constant over a certain range of input signal. The **AGC** output is approximately -13 volts dc for a good signal. If the input signal level decreases below a certain limit, the **AGC** dc level becomes more positive. This will increase the gain of the transimpedance amplifier, IC4, to compensate for the change in input signal. Just the reverse happens when the input signal level increases above a specified limit.

(Reference Middle Right of Figure 10)
A low level detector, (IC9 Pins 1, 2 and 3, R35 through R40, and D5) will operate when the **AGC** dc voltage reaches approximately -7.7 Vdc. At this time, the detector output at TP7 will go low. This low level is inverted through IC8 and appears at TP6. After buffering (IC7 Pins 12, 13, and 8), the high level rapidly charges capacitor C35 through resistor R45 and diode D7. C35 is part of an operational amplifier timer which also consists of a level detector (IC7 Pins 5, 6 and 7, R47, R48, R49 and R50). The detector output at IC7 Pin 7 goes low to -15 Vdc almost immediately. This -15 Vdc is applied to the inverting input (IC7 Pin 9) of another level detector with a positive reference at its non-inverting terminal (IC7 Pin 10). This will cause the level detector output at TP10 to go high, hence causing terminal 4A, **EN**, to go high and terminal 6A, **CA**, to go low. The high at TP10 will also pick up transistor Q1, thus picking up relay K1. Contacts **CANC** (channel alarm normally closed) and **CANO** (channel alarm normally open) will open and close accordingly. The **EN** signal initiates loss of channel options in the **INTERFACE** module, and the **CA** signal blocks transfer trip in the **DTT** module. The high at TP10 also activates an LED, **CHANNEL ALARM** (center of schem.). This LED can be selected for "**SEAL**" or for "**NO SEAL**", through link **L1-ICA**. With the **SEAL** feature, latch IC8 will be set through IC8 pin 5, as long as the reset line, terminal 18C, **RST**, is high. This will cause IC8 pin 3 to be high, which produces a high at IC9 pin 7 to activate the **CHANNEL ALARM** LED. With latch IC8 set, indication will remain after channel alarm conditions are no longer present. With the **L1-ICA** link on **NO-SEAL**, the high at TP10 will be applied directly to IC9 pin 5. This will turn on the **CHANNEL ALARM** LED. However, indication will follow the signal at TP10 and thus will reset when channel conditions return to normal.

On return to normal channel conditions, the Lo Level detector output at TP7 will go back high, causing TP6 to go low. This low, through IC7 pin 8 will cause the C35 capacitor to discharge through R47. After 2 seconds, when the capacitor voltage reaches the reference level at IC7 pin 5, the detector output will go low, at IC7 pin 7. This will cause TP10 to go low, causing **EN** to go low, and **CA** to go high. This will also cause relay K1 to drop out, and the channel alarm contacts to return to their deenergized states. The 2 second timer maintains channel alarm conditions to block the **FCB** system from normal operation until circuits have stabilized.

MODULE REFERENCE INFORMATION

POWER Module - Styles 1606C27G01 (48V), 1606C27G02 (125V), 1606C27G03 (250V)

Internal Schematic: 1353D54
Component Location:1495B56C and 1496B78C
(NOTE: Subassembly Styles are 1606C27G04 (48V), G05 (125V), G06 (250V) - MAIN Module and 1607C58G01 - SUB Module)

INTERFACE Module - Style 1606C26G01

Internal Schematic: 1353D50
Component Location: 1495B49C

MODEM Module - Style 1606C18G01

Internal Schematic: 1353D51
Component Location: 1495B47C

DTT Module - Style 1606C22G01

Internal Schematic: 1353D52
Component Location: 1495B52C

IFO Module - Styles 1606C23G01, G02 (850nm Styles), G03 (1300nm Style)

Internal Schematic: 1353D53
Component Location: 1495B50C

Renewal Parts

Repair work can be done most satisfactorily at the factory. However, interchangeable spare modules or components can be furnished to the customers who are equipped for doing repair work. When ordering parts (components, modules, etc.) always give the complete catalog number and appropriate Westinghouse style number(s)

LIST OF FIGURES

A. **Internal Schematics**

Figure	Module	Drawing
1	POWER	1353D54
2	INTERFACE	1353D50
3	MODEM	1353D51
4	DTT	1353D52
5	IFO	1353D53

B. **Component Locations**

Figure	Module	Drawing
6	POWER	1495B56C & 1496B78C
7	INTERFACE	1495B49C
8	MODEM	1495B47C
9	DTT	1495B52C
10	IFO	1495B50C

FCB MODULE PARTS LISTS

POWER SUPPLY 1606C27

1606C27G01 -(48V) composed of 1607C58G01 (Sub Module) and 1606C27G04 (Main Module)

1606C27G02 - (125V) compoosed of 1607C58G01 (Sub Module) and 1606C27G05 (Main Module)

1606C27G03 - (250V) composed of 1607C58G01 (Sub Module) and 1606C27G06 (Main Module)

COMP	STYLE	DESCRIPTION	GROUPS
	PC Board 1495B56H01		ALL
	CAPACITOR		
C04	9647A29H03	47UF 400V	G06
C04	9647A29H01	150UF 200V 20% 105 DEG.C	G05
C04	9647A29H02	220UF 160V	G04
C05	184A663H14	.1MFD +-5% 500V	ALL
C06	876A409H17	.47MFD +-5% 200V MYLAR	ALL
C14	762A680H05	1500PF +-10% 1KV CER	ALL
C15	762A680H02	.001MFD 1KV +-10% CER	ALL
C16	9645A36H04	470MFD 35V +-20% 105 DEG.C	ALL
C17	762A680H02	.001MFD 1KV +-10% CER	ALL
C18	762A680H05	1500PF +-10% 1KV CER	ALL
C19	9645A36H04	470MFD 35V +-20% 105 DEG.C	ALL
C20	3536A32H02	.01MF 20% 3000V CERAMIC	ALL
C21	9645A36H05	100MFD 25V +-20% 105 DEG.C	ALL
C22	9645A36H05	100MFD 25V +-20% 105DEG.C	ALL
C30	762A680H14	.1MFD 100V +-20% CER	ALL
C31	762A680H14	.1MFD 100V +-20% CER	ALL
C32	762A680H14	.1MFD 100V +-20% CER	ALL
C33	762A680H14	.1MFD 100V +-20% CER	ALL
C36	762A680H14	.1MFD 100V +-20% CER	ALL
C37	762A680H14	.1MFD 100V +-20% CER	ALL
	CHOKE		
L02	9645A18H03		ALL
L03	9645A18H03		ALL
	DIODE		
D02	3535A29H01	600V PIV3A EPOXY FAST RECOV	ALL
D04	3535A29H01	600V PIV3A EPOXY FAST RECOV	ALL
D05	3535A29H01	600V PIV3A EPOXY FAST RECOV	ALL
D06	3535A29H01	600V PIV3A EPOXY FAST RECOV	ALL
D07	3535A29H01	600V PIV3A EPOXY FAST RECOV	ALL
D09	837A692H03	1N645A225V .2AMP	ALL
D10	837A692H03	1N645A225V .2AMP	ALL
D11	837A692H03	1N645A225V .2AMP	ALL
D12	837A692H03	1N645A225V .2AMP	ALL
LED-1	3508A22H02	YELLOW LED (EDGE MOUNT) 550-0306	ALL

	FUSE		
F01	183A981H11	.5AMP 250V 3AGSLO-BLO	ALL
F02	183A981H11	.5AMP 250V 3AGSLO-BLO	ALL
	INTCKT		
IC06	9640A97H01	LM258N DUAL OP AMP	ALL
IC07	3535A15H01	MC7915CT	ALL
IC08	3535A22H01	MC7815CT 15V 1.5A 3 TERM R	ALL
	JUMPER		
RP	3532A54H01	BLUE CLIP JUMPER	ALL
	RELAY		
K01	1484B33H01	AROMAT TYPE ST1E-DC12V	ALL
	RESISTOR		
R01	763A129H09	15K 5W 5% WIREWOUND	G05
R01	763A130H10	30K 5W 1% WIREWOUND	G06
R01	763A127H03	2K 3W 5% WIREWOUND	G04
R02	763A126H95	7K 3W 1%	ALL
R04	878A330H02	1.0 OHM 2. 25W +-5% WIREWOUND	G05
R04	3529A29H03	.4-OHM 5W	G04
R04	629A371H23	2-OHM 1W 5% MOLDED COMP	G06
R22	763A127H08	470-OHM 3W 5% WIREWOUND	ALL
R23	763A127H08	470-OHM 3W 5% WIREWOUND	ALL
R24	3535A37H68	49.9K .25W 1% META LFILM	ALL
R25	3535A37H68	49.9K .25W 1% METAL FILM	ALL
R49	629A531H44	3.3K 1W 2% METAL GLAZE	ALL
R50	629A531H26	560-OHM 1W 2% METAL FILM	ALL
R51	629A531H36	1.5K 1W 2% METAL GLAZE	ALL
R52	848A819H19	499.0. 25W 1%	ALL
R53	3535A37H01	10K .25W 1% METAL FILM	ALL
R54	3535A38H39	2.49K .25W 1% METAL FILM	ALL
R55	3535A38H47	3.01K .25W 1% METAL FILM	ALL
R56	3535A37H68	49.9K .25W 1% METAL FILM	ALL
R57	3534A05H03		ALL
R58	3535A38H47	3.01K .25W 1% METAL FILM	ALL
R59	3535A38H47	3.01K .25W 1% METAL FILM	ALL
R60	3535A38H47	3.01K .25W 1% METAL FILM	ALL
R61	3535A38H47	3.01K .25W 1% METAL FILM	ALL
R62	3535A39H01	100-OHM .25W 1%METAL FILM	ALL
	TRANSF		
T02	1496B86G01		G05
T02	1496B86G02		G04
T02	1496B86G03		G06
	TRANSISTOR		
Q01	9641A07H01	1RF720 400V 3A	G04,5
Q01	9645A74H03	1RF830 MOSFET 500V	G06
Q08	3532A45H16	T1P11 680V 2AG04,5	
Q09	762A672H15	2N2222A, NPN40V .8A .4W	ALL
Q10	762A672H17	2N2907A PNP60V .6A .4W	ALL

	ZENER		
Z01	849A487H05	1N4761A 75V 5% 1W	G04
Z01	862A288H35	1N5384B 160V 5% 5W	G05
Z01	837A693H18	UZ5234 340V 10% 5W	G06
Z02	837A693H18	UZ5234 340V 10% 5W	G04,G05
Z02	837A693H17	UZ5240 400V 10% 5W	G06
Z07	185A212H12	1N4749A 24V 5% 1W	ALL
Z08	9448A01H56	1N964B 13V 5% 400MW	ALL
Z09	185A212H12	1N4749A 24V 5% 1W	ALL

POWER SUPPLY SUB ASSEMBLY 1607C58

COMP	STYLE	DESCRIPTION	GROUP
	PC BOARD		
	1496B78H01		ALL
	CAPACITOR		
C01	3536A32H01	.001MF 20% 3000V CERAMIC	G01
C02	3536A32H01	.001MF 20% 3000V CERAMIC	G01
C03	184A663H14	.1MFD +-5% 500V	G01
C08	762A680H14	.1MFD 100V +-20% CER	G01
C09	9645A36H05	100MFD 25V +-20% 105 DEG. CERAMIC	G01
C10	879A911H10	470PF 1KV +-10% CERAMIC	G01
C11	879A911H10	470PF 1KV +-10% CERAMIC	G01
C12	762A757H12	270PF 500V +-2% MICA	G01
C13	763A209H25	5PF 500V +-10% MICA	G01
C23	9645A36H05	100MFD 25V +-20% 105 DEG.	G01
C24	762A680H14	.1MFD 100V +-20% CER	G01
C25	3512A08H02	.22MFD 100V +-20% CER	G01
C26	3516A08H01	.01UF +-2% 200V	G01
C27	762A680H14	.1MFD 100V +-20% CER	G01
C28	188A669H14	.027MFD +-10% 50V	G01
C29	762A680H14	.1MFD 100V +-20% CER	G01
C35	763A209H07	20PF 500V MICA +-2.5%	G01
	CHOKE		
L01	3532A37H01	3443-58 270UH .33 OHM 10%	G01
T01	3535A73H01	270UH	G01
	DIODE		
D01	188A342H21	1N5406 600V PIV 3A	G01
D03	836A928H06	1N4148 75V 10MA	G01
D08	837A692H03	1N645A 225V .2 AMP	G01
LED2	3508A22H01	RED LED (EDGE MOUNT) 550-0406	G01
Z04	862A288H05	1N966B 16V 5% 400MW	G01
Z03	862A288H04	1N5352B 15V 5% 5W	G01
	INT CKT		
IC01	3527A09H02	MC14011BAL QUAD-2 INPUT NAND	G01
IC02	3527A09H02	MC14011BAL QUAD-2 INPUT NAND	G01
IC03	3534A93H01	6N136 OPTO-COUPLER	G01
IC0	3534A93H01	6N136 OPTO-COUPLER	G01
IC05	3534A92H01	SG1524 PULSE WIDTH MODULATOR	G01
IC09	3524A65H01	LM239AF QUAD COMP.	G01

R41	3535A37H01	10.0K-OHM .25W 1% M.F.	ALL
R42	3535A37H68	49.9KOHM .25W 1% M.F.	ALL
R43	3535A37H01	10.0K-OHM .25W 1% M.F.	ALL
R44	3532A38H01	100K-OHM .25W 1% M.F.	ALL
R45	3535A39H47	301OHM .25W 1% M.F.	ALL
R46	3535A38H30	2.00K-OHM .25W 1% M.F.	ALL
R47	3535A41H53	1.5M-OHM .25W 5% C.F.	ALL
R48	3532A38H01	100K-OHM .25W 1% M.F.	ALL
R49	3535A37H51	33.2K-OHM .25W 1% M.F	ALL
R50	3535A41H56	2M .25W 5% C.F.	ALL
R51	3535A37H01	10.0K-OHM .25W 1% M.F.	ALL
R52	3535A38H01	1.0K-OHM .25W, 1% M.F.	ALL
R53	3535A38H01	1.0K-OHM .25W, 1% M.F.	ALL
R54	3535A37H01	10.0K-OHM .25W 1% M.F.	ALL
R55	629A531H23	430 OHM, 1/2W, +-2% METAL GLAZE	ALL
R56	3535A37H01	10.0K-OHM .25W 1% M.F.	ALL
R57	3535A39H47	301 OHM .25W, 1% M.F.	ALL
R58	3535A37H01	10.0K-OHM .25W 1% M.F.	ALL
R59	187A683H18	51-OHM 5% 2W C.C.	ALL
R60	187A683H18	51-OHM 5% 2W C.C.	ALL
R61	187A683H18	51-OHM 5% 2W C.C.	ALL
R62	187A290H08	20 OHM 1/2W 5% CARBON	ALL
R63	862A478H01	ZERO OHM RESISTOR	G01,G02
R63	3535A37H01	10.0K-OHM .25W 1% M.F.	G03
R64	3535A38H69	5.11K-OHM .25W 1% M.F.	G03
	TEST JACK		
COMMON	3532A53H03	BLACK PC MOUNT	ALL
AGC	3532A53H09	BLUE	ALL
RFI	3532A53H05	RED	ALL
	TERMINAL		
TP1	849A242H01	TEST POINT	ALL
TP2	849A242H01	TEST POINT	ALL
TP3	849A242H01	TEST POINT	ALL
TP4	849A242H01	TEST POINT	ALL
TP5	849A242H01	TEST POINT	ALL
TP6	849A242H01	TEST POINT	ALL
TP7	849A242H01	TEST POINT	ALL
TP8	849A242H01	TEST POINT	ALL
TP9	849A242H01	TEST POINT	ALL
TP10	849A242H01	TEST POINT	ALL
	CONNECTOR		
L1-ICA	3532A49H03	2 POSITION CONN (4 PIN)	ALL
	PAD		
Q1	187A850H04	MOUNTING TO-18 PKG 3 PIN	ALL
Q2	187A850H04	MOUNTING TO-18 PKG 3 PIN	ALL

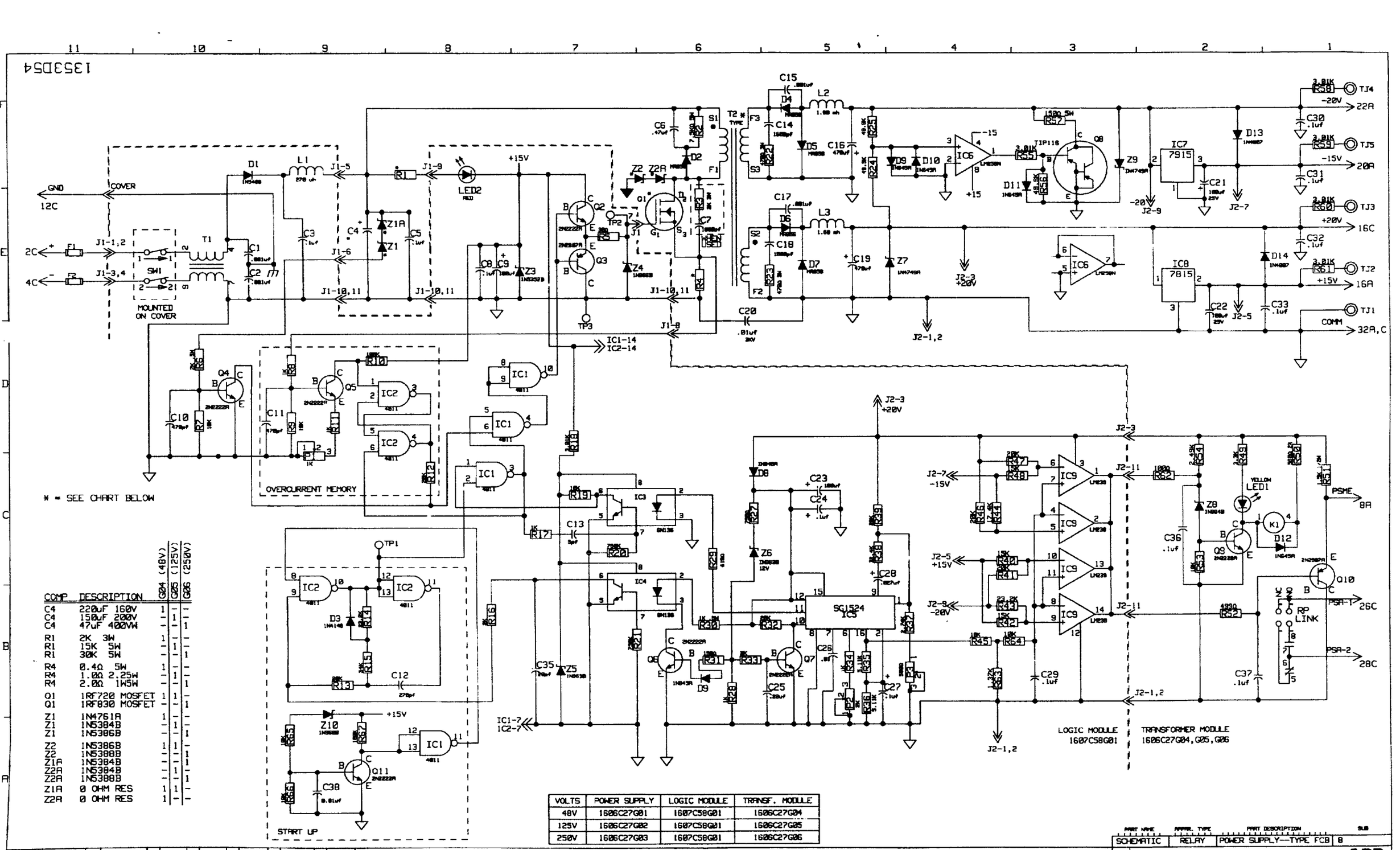

COMP	DESCRIPTION	G04 (48V)	G05 (125V)	G06 (250V)
C4	220uF 160V	1	-	-
C4	150uF 200V	-	1	-
C4	47uF 400VW	-	-	1
R1	2K 3W	1	-	-
R1	15K 5W	-	1	-
R1	30K 5W	-	-	1
R4	0.4Ω 5W	1	-	-
R4	1.0Ω 2.25W	-	1	-
R4	2.0Ω 1W5W	-	-	1
Q1	IRF720 MOSFET	1	1	-
Q1	IRF830 MOSFET	-	-	1
Z1	1N4761A	1	-	-
Z1	1N5384B	-	1	-
Z1	1N5386B	-	-	1
Z2	1N5386B	1	1	-
Z2	1N5388B	-	-	1
Z1A	1N5384B	-	-	1
Z2A	1N5384B	-	1	-
Z2A	1N5388B	-	-	1
Z1A	0 OHM RES	1	1	-
Z2A	0 OHM RES	1	-	-

VOLTS	POWER SUPPLY	LOGIC MODULE	TRANSF. MODULE
48V	1606C27G01	1607C58G01	1606C27G04
125V	1606C27G02	1607C58G01	1606C27G05
250V	1606C27G03	1607C58G01	1606C27G06

PART NAME	PRINT TYPE	PART DESCRIPTION	SUB
SCHEMATIC	RELAY	POWER SUPPLY--TYPE FCB	8

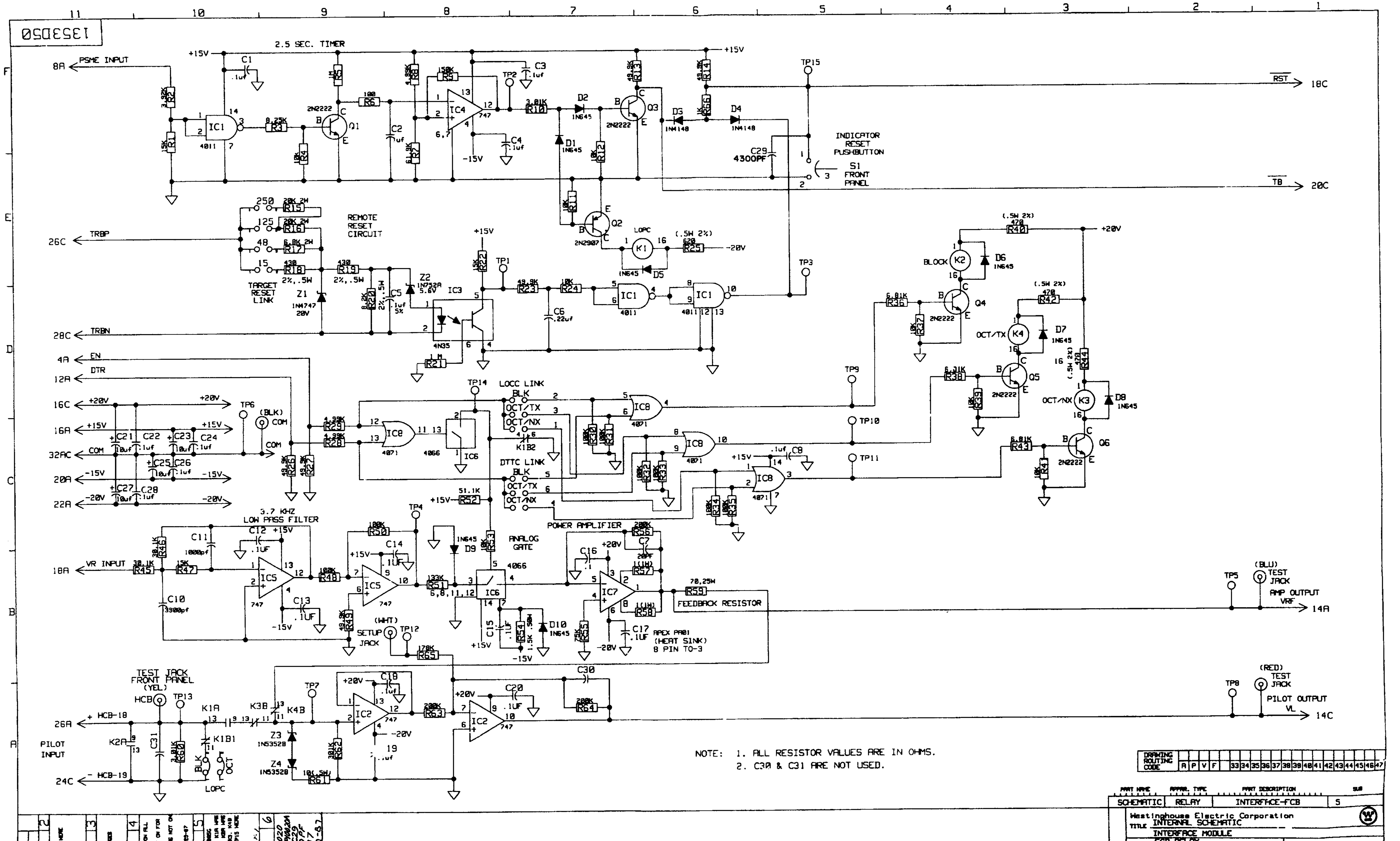

1353D50
2.5 SEC. TIMER
PSME INPUT
REMOTE RESET CIRCUIT
TARGET RESET LINK
INDICATOR RESET PUSHBUTTON
S1 FRONT PANEL
LOCC LINK
DTTC LINK
3.7 KHZ LOW PASS FILTER
VR INPUT
ANALOG GATE
POWER AMPLIFIER
FEEDBACK RESISTOR
APEX PA01 (HEAT SINK) 8 PIN TO-3
SETUP JACK
(BLU) TEST JACK
AMP OUTPUT VRF
(RED) TEST JACK
PILOT OUTPUT VL
TEST JACK FRONT PANEL (YEL)
PILOT INPUT
LOPC
NOTE: 1. ALL RESISTOR VALUES ARE IN OHMS.
2. C30 & C31 ARE NOT USED.
DRAWING ROUTING CODE
SCHEMATIC
RELAY
INTERFACE-FCB
Westinghouse Electric Corporation
TITLE INTERNAL SCHEMATIC
INTERFACE MODULE

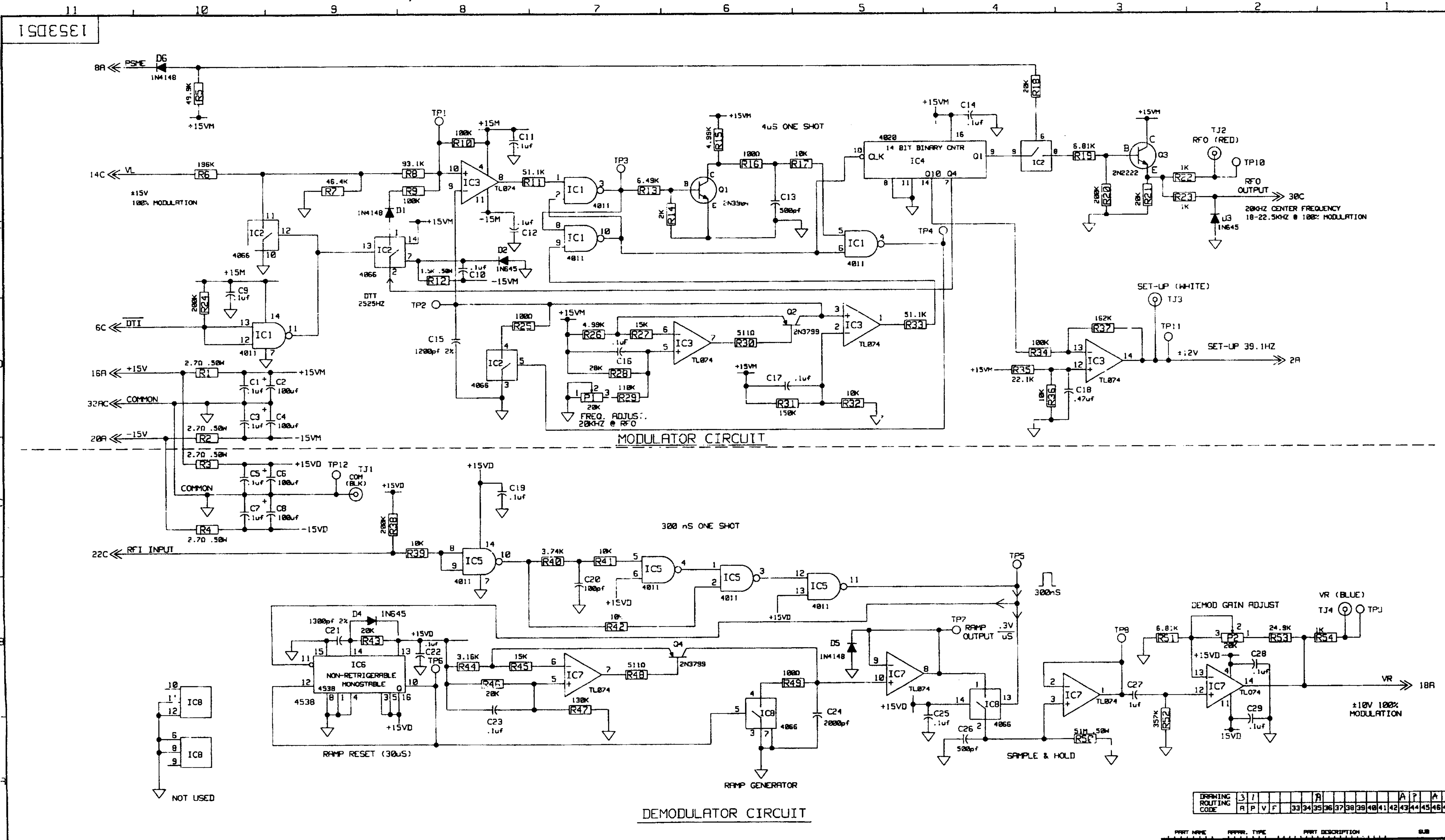
MODULATOR CIRCUIT
DEMODULATOR CIRCUIT
4uS ONE SHOT
14 BIT BINARY CNTR
4020
IC4
300 nS ONE SHOT
IC6
NON-RETRIGERABLE MONOSTABLE
4538
RAMP RESET (30uS)
RAMP GENERATOR
SAMPLE & HOLD
DEMOD GAIN ADJUST
RAMP OUTPUT .3V/uS
FREQ. ADJUST.
20KHZ @ RFO
RFO (RED)
RFO OUTPUT
20KHZ CENTER FREQUENCY
18-22.5KHZ @ 100% MODULATION
SET-UP (WHITE)
SET-UP 39.1HZ
VR (BLUE)
±10V 100% MODULATION
±15V
100% MODULATION
RFI INPUT
COMMON
PSME
NOT USED
DRAWING ROUTING CODE

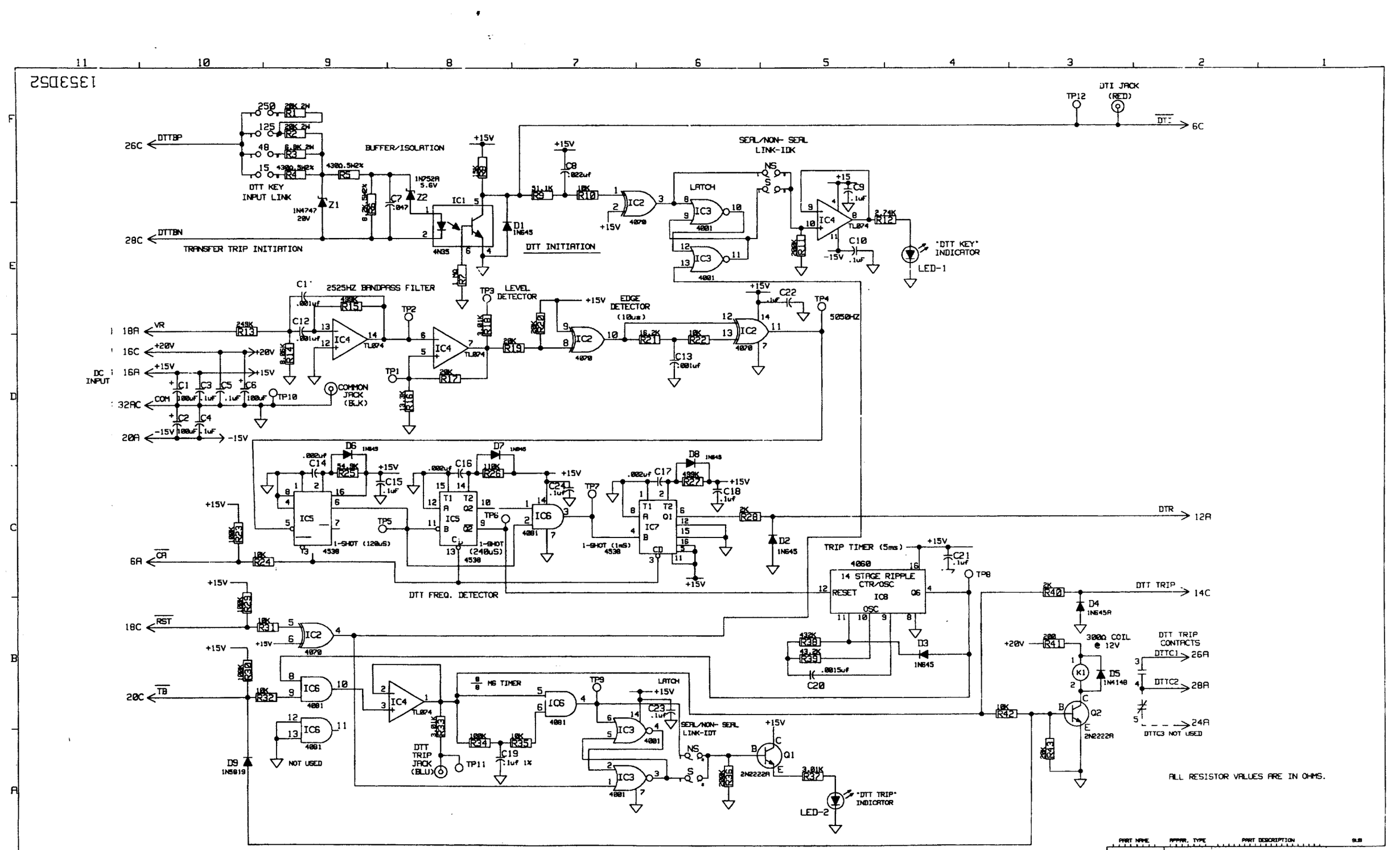
DTT JACK (RED)
TP12
DTI
6C
DTTBP
26C
DTTBN
28C
TRANSFER TRIP INITIATION
BUFFER/ISOLATION
250
125
48
15
DTT KEY INPUT LINK
4380.5Ω2%
1N4747 20V
Z1
Z2
1N752A 5.6V
IC1
4N35
D1 1N645
DTT INITIATION
SEAL/NON- SEAL LINK-IDK
LATCH
NS
S
IC3 4001
IC4 TL074
C9 1uF
C10 .1uF
2.74K R12
"DTT KEY" INDICATOR
LED-1
2525HZ BANDPASS FILTER
LEVEL DETECTOR
EDGE DETECTOR (10us)
TP1
TP2
TP3
TP4
5050HZ
18A VR
16C +20V
16A +15V
32AC COM
20A -15V
DC INPUT
COMMON JACK (BLK)
TP10
IC5 4538
1-SHOT (120uS)
1-SHOT (240uS)
1-SHOT (1mS)
IC7
D6 1N645
D7 1N645
D8 1N645
D2 1N645
DTR
12A
6A CR
DTT FREQ. DETECTOR
TRIP TIMER (5ms)
4060
14 STAGE RIPPLE CTR/OSC
IC8
RESET
OSC
Q6
TP8
C20 .0815uf
C21 .1uf
DTT TRIP
14C
D4 1N645A
D3 1N645
300Ω COIL @ 12V
+20V
K1
D5 1N4148
DTT TRIP CONTACTS
DTTC1
26A
DTTC2
28A
DTTC3 NOT USED
24A
Q2 2N2222A
18C RST
20C TB
NOT USED
D9 1N5819
DTT TRIP JACK (BLU)
TP11
C19 .1uf 1%
6 MS TIMER
TP9
SEAL/NON- SEAL LINK-IDT
Q1 2N2222A
3.01K R37
"DTT TRIP" INDICATOR
LED-2
ALL RESISTOR VALUES ARE IN OHMS.
PART NAME
REFER. TYPE
PART DESCRIPTION

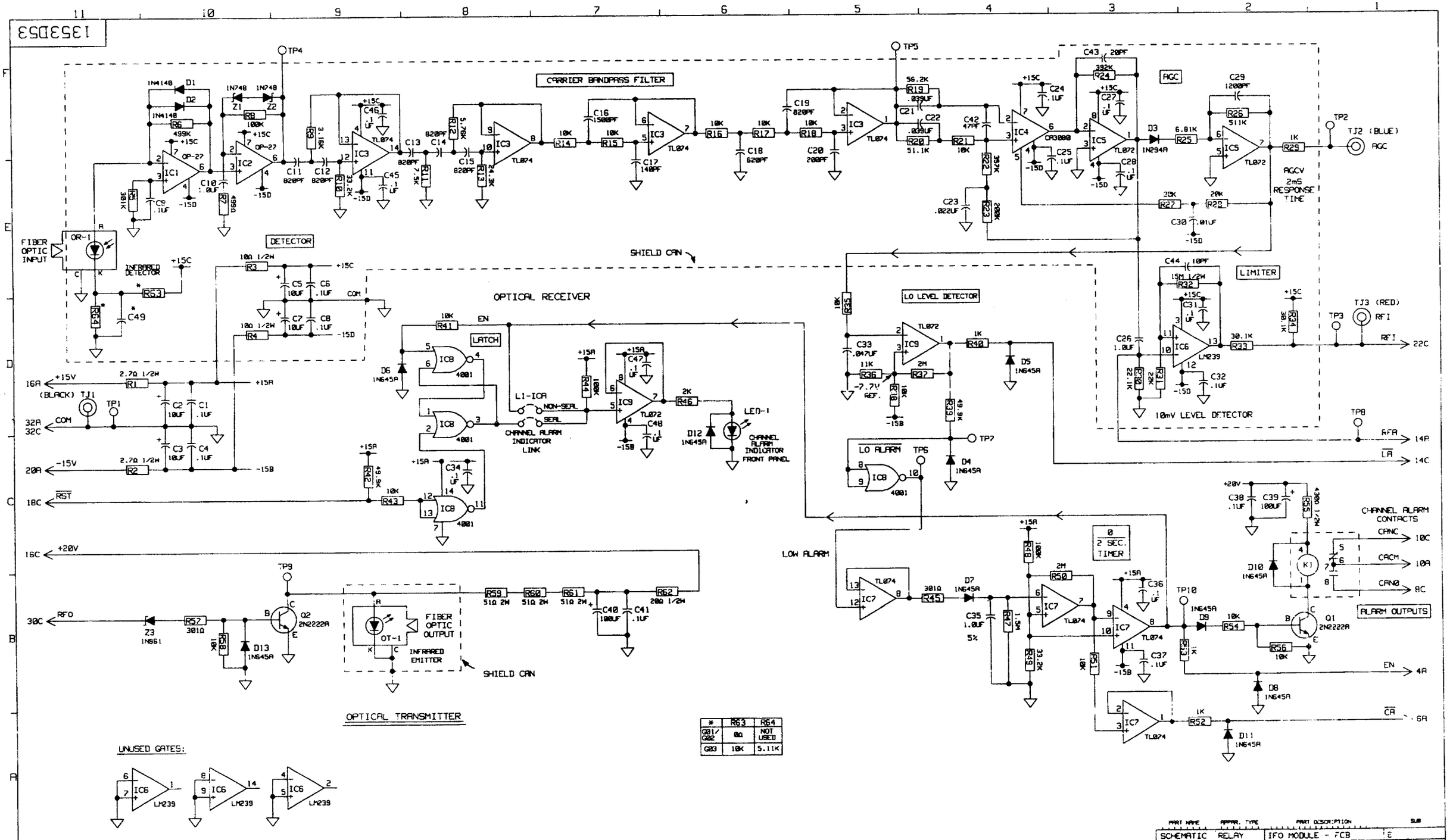

*	R63	R64
Q01/ Q02	0Ω	NOT USED
Q03	10K	5.11K

PART NAME	APPAR. TYPE	PART DESCRIPTION	SUB
SCHEMATIC	RELAY	IFO MODULE - PCB	E

1496B78

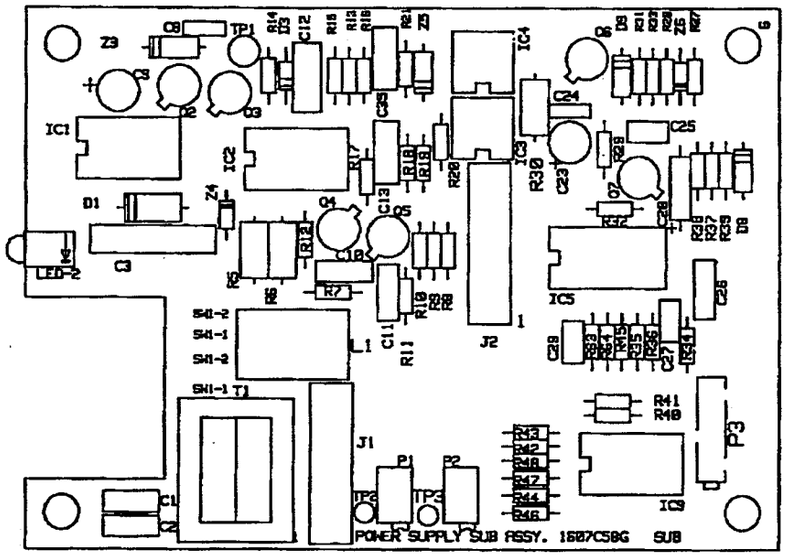

PART NAME	APPAR. TYPE	PART DESCRIPTION	SUB
PC BOARD	FCB	PWR SUP SUB ASSY	6

ABB POWER T&D COMPANY INC.

TITLE DRILL DWG. POWER SUPPLY SUB ASSY

FCB RELAY

COMPONENT LOCATION

DFTM		APPD	
CHKR.		APPD	
		APPD	

ENGR. REF. DWG.

DWG. NO. 1496B78

SHEET 7 OF 7

RELAY DIVISION - CORAL SPRINGS, FLORIDA, U.S.R.

CODE 4100

SO D- 905845-1

CAD DWG

CHANGES TO BE MADE USING CAD PROCESS ONLY

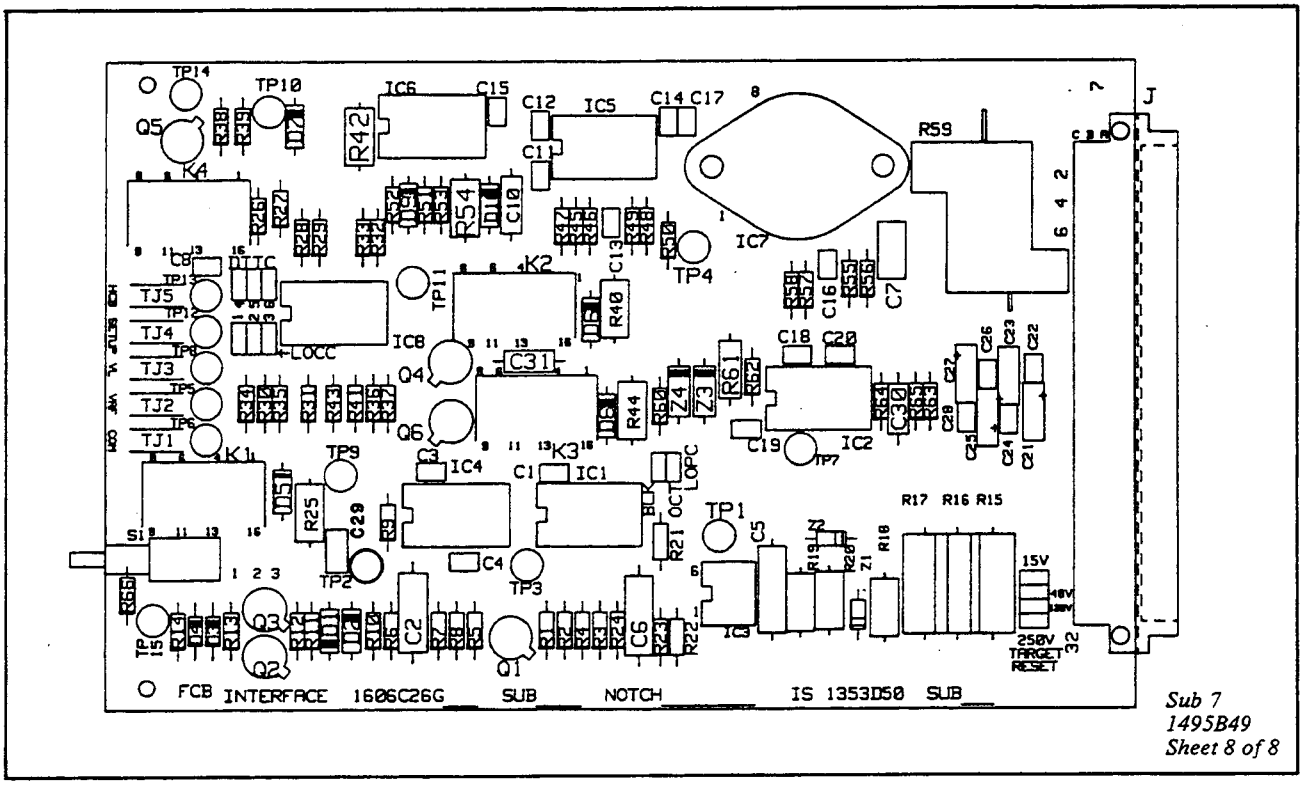

Fig. 7. Component Location Interface Module

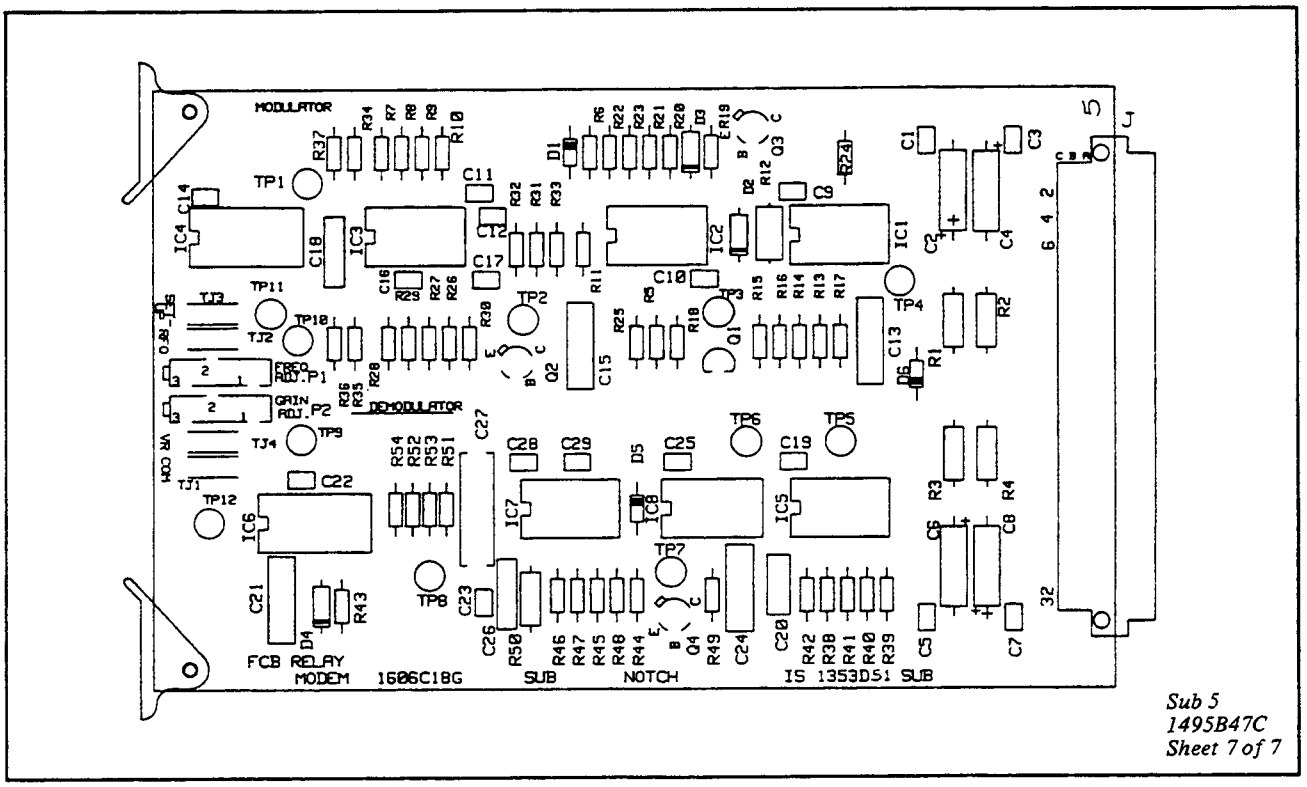

Fig. 8. Component Location Modem Module

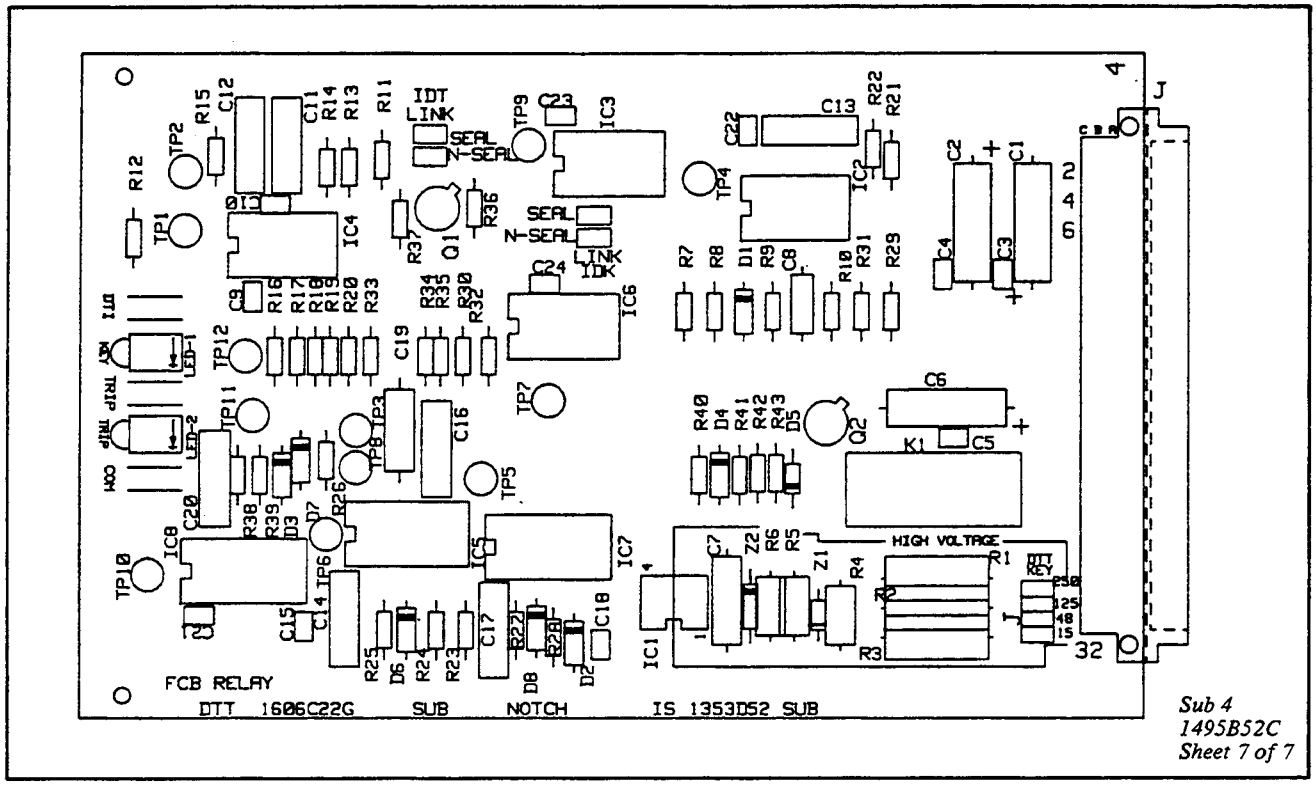

Fig. 9. Component Location DTT Module

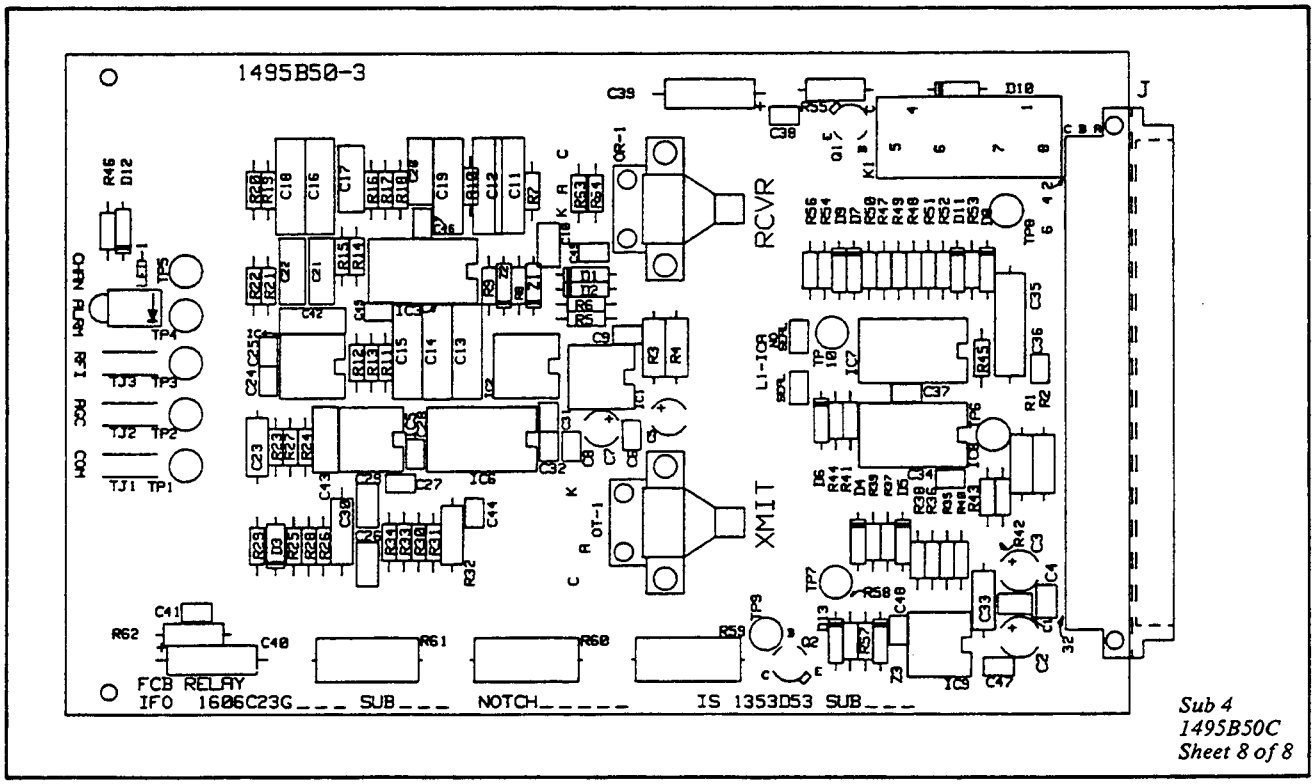

Fig. 10. Component Location IFO Module

ABB Power T&D Company Inc.
Relay Divisions
Coral Springs, FL 33065

ADDENDUM TO
I.L. 40-976

Module Instructions For Type FCB Fiber Optic Interface

Effective : May 1990
This Addendum Supersedes
All Previous Addenda

A - Add New Information • C - Change Existing Information • D - Delete Information

A

Page 7

Add the following paragraphs to the end of text **IFO—OPTICAL INTERFACE MODULE:**

Refer to Figures 11 and 12 for module schematics and to Figures 13 and 14 for component locations. The IFO High Power Module consists of the main module (Assy 1610C94 and Schematic 1356D22) containing fiber optic receiver and FCB interface circuits and the auxiliary module (Assy 1611C09 and Schematic 1502B08) containing fiber optic transmitter.

Both transmitter and the receiver are designed for 1300 nm wavelength; and use ST fiber optic cable connection.

Transmitter (refer to Figure 12).

The transmitter contains edge emitting LED OT-1 whose light output is controlled by the modulator output signal RFO. The modulated light output is applied to the fiber optic cable for transmission to the remote unit.

Low transition of RFO signal (J1-9 and 10 turns Q1 off and forces current flow (from +20 V) through light emitting diode OT-1. When RFO signal is high Q1 conducts, shunting OT-1 and turning the light off. Resistors R3, R4, R5 and R6 limit the current to approximately 150 mA.

Receiver (refer to Figure 11).

Refer to the description on page 7 starting: "The optical receiver....." and ending ".....until circuits have stabilized".

A

Page 8

Add under **MODULE REFERENCE INFORMATION:**

IFO Module, High Power - Style 1610C94G01

Main Module Internal Schematic: 1356D22

Component Location: 1610C94 sheet 3

All possible contingencies which may arise during installation, operation or maintenance, and all details and variations of this equipment do not purport to be covered by these instructions. If further information is desired by purchaser regarding this particular installation, operation or maintenance of this equipment, the local ABB Power T&D Company Inc. representative should be contacted.

Printed in U.S.A.

Transmitter Module:

Internal Schematic: 1502B08

Component Location: 1611C09

A

Page 8

Add under **LIST OF FIGURES:**

A. Internal Schematics

Figure	Module	Drawing
11	IFO High Power (main)	1356D22
12	IFO High Power (xmtr)	1502B08

B. Component Location

Figure	Module	Drawing
13	IFO High Power (main)	1610C94 Sheet 3
14	IFO High Power (xmtr)	1611C09

A

Page 25

Add at the bottom of the page:

IFO High Power Module 1610C94 Parts List per 1610C94 Sheet 1

Add the following Figures:

11	IFO High Power Module Schematic	1356D22
12	IFO High Power Module Transmitter	1502B08
13	IFO High Power Module Assembly	1610C94 Sheet 1 & 3
14	IFO High Power Module Transmitter Assembly	1611C09

7630191

J01	BOS	CAPACITOR	3532A29H13	0.1UF,50v,20% MONO CER X7R	20
J02	BOS	CAPACITOR	880A363H01	100 MFD, 35v, +-20% TANTALUM	1
J03	BOS	CAPACITOR	3533A75H03	10UF 25v,20% DIP TANT	4
J04	BOS	CAPACITOR	3512A08H01	1.00UF 50v +/-20% CERAMIC	2
J05	BOS	CAPACITOR	762A757H22	820PF 500V +/-2% DUR-MICA	6
J06	BOS	CAPACITOR	762A757H03	1500PF 500V 2% DUR-MICA	1
J07	BOS	CAPACITOR	762A757H08	140PF 500V +/-2% DUR-MICA	1
J08	BOS	CAPACITOR	187A584H11	62GPF 500V +/-2% DUR-MICA	1
J09	BOS	CAPACITOR	762A757H11	200PF 500V,+-2% DUR-MICA	1
J10	BOS	CAPACITOR	763A209H17	47 PF 500V,+-2% MICA	1
J11	BOS	CAPACITOR	880A397H08	1200PF 200V +/-2% CER COG	1
J12	BOS	CAPACITOR	3502485H13	.01UF 200V 5% POLYESTER	1
J13	BOS	CAPACITOR	3534A68H07	.047 MFD/100V,+-5% MET-POLY CARB	1
J14	BOS	CAPACITOR	3534A68H11	1.0 MFD 50v, +- 5% MET-POLY CARB	1
J15	BOS	CAPACITOR	3533A53H01	.022 MFD 100V +- 2% MET-POLY CARB	1
J16	BOS	CAPACITOR	3532A34H02	.039UF 250V 5% MET POLYEST	2
J17	BOS	CAPACITOR	763A209H07	20 PF, 500V MICA +-2.5%	1
J18	BOS	CAPACITOR	879A969H01	10PF 200V +/-.5PF CER COG	1
J19	BOS	DIODE	836A923H06	1N4148 75V 10MA	2
J20	BOS	RECTIFIER	182A341H06	1N294A	1
J21	BOS	DIODE	837A592H05	1N645A 225V .2 AMP	9
~~J22~~	~~BOS~~	~~DIODE~~	~~9644A71H03~~	~~HFE4315-013 PC, MT, HONEYW, EM.~~	~~1~~
~~J23~~	~~BOS~~	~~DIODE~~	~~9644A71H04~~	~~SPX5194-002 PC, MT, HONEYW, DET.~~	~~1~~
J24	REL	LEAD	3536A25G02	3 PIN SOCKET/LEAD ASSEM	1
~~J25~~	~~BOS~~	~~DIODE~~	~~9644A71H01~~	~~HFE4307-013 HONEYWELL EMITTER~~	
~~J26~~	~~BOS~~	~~DIODE~~	~~9644A71H02~~	~~HFD 3864-002 HONEYWELL DETECTOR~~	
J27	BOS	DIODE-LED	3508A22H01	RED LED (EDGE MOUNT) 550-0406	1
J28	BOS	TRANSISTOR	762A672H15	2N2222A, NPN 40V .8A .4w	1
J29	BOS	INT CKT	3535A97H01	ULTRA LOW NOISE OP-AMP OP-27GZ	2
J31	BOS	INT CKT	3528A90H01	TL074 IJ QUAD OP AMP	2
J32	BOS	INT CKT	3533A21H01	CA3040AS OP TRANSCOND AMP	1
J33	BOS	INT CKT	3524A65H01	LM239AF QUAD COMP.	1
J34	BOS	INT CKT	3533A17H01	MC14001BAL QUAD 2-INPUT NOR	1
J35	BOS	ZENER	166A797H13	1N748A 3.9V 400MW	2
~~J36~~	~~BOS~~	~~ZENER~~	~~186A797H07~~	~~1N761B 10V 5% 400MW~~	~~1~~
J37	BOS	RELAY	1484833H01	AROMAT TYPE ST1E-DC 12V	1
J38	BOS	RESISTOR	187A270H01	10 OHM 5% .5W CARBON	2
J39	BOS	RESISTOR	3532A38H47	301K-OHM .25W 1% METAL FILM	1
J40	BOS	RESISTOR	3532A38H68	499K .25W,1% M.F.	1
J41	BOS	RESISTOR	3535A39H68	499 OHM .25W 1% M.F.	1
J42	BOS	RESISTOR	3532A38H61	100K-OHM .25W,1% M.F.	3
J43	BOS	RESISTOR	3535A38H49	3.16K .25W,1%	1
J44	BOS	RESISTOR	3535A37H51	33.2K-OHM .25W,1% M.F	2
J45	BOS	RESISTOR	3535A38H85	7.50K-OHM .25W,1% M.F.	1
J46	BOS	RESISTOR	3535A38H74	5.76 K-OHM .25 1% M.F.	1
J47	BOS	RESISTOR	3535A37H36	24.3K .25W,1% M.F	1
J48	BOS	RESISTOR	3535A37H01	10.0 K-OHM .25W 1% M.F.	14
J49	BOS	RESISTOR	3532A38H54	357K-OHM .25W 1% METAL FILM	1
J50	BOS	RESISTOR	3532A38H30	200K-OHM .25W,1% M.F.	1
J51	BOS	RESISTOR	3532A38H58	392K-OHM .25W 1% METAL FILM	1
J52	BOS	RESISTOR	3535A37H30	20.0K-OHM 1% .25W M.F.	2
J53	BOS	RESISTOR	3535A38H01	1.0K-OHM .25W,1% M.F.	4
J54	BOS	RESISTOR	3535A37H34	22.1K-OHM .25W,1% M.F.	2
J55	BOS	RESISTOR	187A290H40	15M 5% CARB 1/2W	1
J56	BOS	RESISTOR	3532A38H69	511K-OHM .25W 1% METAL FILM	1
J57	BOS	RESISTOR	3535A41H56	2M .25W,5% C.F.	2
~~J58~~	~~BOS~~	~~RESISTOR~~	~~3535A37H61~~	~~18.2 K-OHM .25W 1% M.F.~~	~~1~~
J59	BOS	RESISTOR	3535A37H68	49.9K OHM .25W,1% M.F.	2
J60	BOS	RESISTOR	3535A39H47	301 OHM .25W,1% M.F.	1
J61	BOS	RESISTOR	3535A41H53	1.5M-OHM .25W,5% C.F.	1
J62	BOS	LOCKWASHER	877A681H05	.138 INT TOOTH	4
~~J63~~	~~BOS~~	~~RESISTOR~~	~~187A290H08~~	~~20 OHM 1/2W 5% CARBON~~	~~1~~
J64	BOS	RESISTOR	629A531H23	430 OHM, 1/2W, +-2% METAL GLAZE	1
J65	BOS	RESISTOR	3535A38H50	2.00K-OHM .25W,1% M.F.	1
J66	BOS	RESISTOR	RM3#12FQA9	30.1K-OHM .25W,1% M.F.	2
J67	BOS	RESISTOR	3535A38H81	6.81 K-OHM .25W 1% M.F.	1
J68	BOS	RESISTOR	3535A37H05	11.0 K-OHM .25W 1% M.F.	1
J69	BOS	RESISTOR	3535A37H69	51.1K-OHM .25W,1% M.F.	1
J70	BOS	RESISTOR	3535A37H73	56.2K .25W,1% M.F.	1
J71	BOS	INT CKT	3528A9GH02	TL072IJ DUAL J-FET INPUT OP-AMP	2
J72	BOS	TIP JACK	3532A53H03	BLACK PC MOUNT	1
J73	BOS	TIP JACK	3532A53H09	BLUE	1
J74	BOS	TIP JACK	3532A53H05	RED	1
J75	BOS	COVER	1584C29H02	SHEILD CAN BOTTOM	1
J76	BOS	TERMINAL	849A262H01	TEST POINT	9
J77	MFR	CONNECTOR	3532A49H03	4 POSITION JUMPER (8 PIN)	1
J78	BOS	JUMPER	3532A54H01	BLUE CLIP JUMPER	1
~~J79~~	~~BOS~~	~~BLOCK~~	~~3535A95H01~~	~~DETECTOR MTG BLOCK~~	
~~J80~~	~~BOS~~	~~SCREW~~	~~3536A23H03~~	~~.086-80x.375-FHD-BR~~	
~~J81~~	~~BOS~~	~~NUT~~	~~877A215H01~~	~~.060-80 HEX STD BR~~	
~~J82~~	~~BOS~~	~~LOCKWASHER~~	~~3536A33H01~~	~~.060 STD BR~~	
J83	BOS	SCREW	877A257H03	.086 - 56 X .250 BHD BR.	5
J84	BOS	NUT	877A220H17	.086-56 STD HEX BR.	5
J85	BOS	CONNECTOR	9646A11H02	PD32-10302-100	1
J86	BOS	ROLL PIN	9644A92H01	ROLL PIN	2
J88	BOS	PAD	187A350H04	MOUNTING TO-18 PKG 3 PIN	1
J89	BOS	COVER	1584C28HC2	SHEILD CAN TOP	1
J90	BOS	PC BOARD	1500B21H01	SUB 1	1
J91	BOS	RESISTOR	187A290H31	2.7 OHM 1/2W 5% CARBON	2
J92	BOS	IC SOCKET	3534A76H03	14 PIN	4
J93	BOS	IC SOCKET	3534A76HC2	8 PIN	5
J94	BOS	EJECTOR	3532A48HC3	EJECTOR W/PIN	2
J95		MOD. ASSY	1611C09G01	TRANSMITTER BD ASSY	1
J96	BOS	STANDOFF	3537A39H04	.875 LONG	4
J97	BOS	SCREW	877A268H03	.138-32 X .250	4
~~J98~~	~~BOS~~	~~JUMPER~~	~~862A474H01~~	~~ZERO OHM RESISTOR~~	~~1~~
J99	BOS	RESISTOR	3535A36H69	5.11K-OHM .25W,1% M.F.	1
J100	BOS	OPTIC LED	9647A37H08	LYTEL 0673 PIN PHOTO D/ST	1
J01		CONNECTOR	3529A12H22	10 PIN	1
J02		BLOCK	9649A29H02	DETECTOR MOUNTING	1

CUT	PART NAME	APPR. TYPE	PART DESCRIPTION	SUB
15	PC BOARD	RELAY	IFO MODULE—FCB	2

1610C94

FIG. 1

ALIGN SOCKET HOLES WITH RECEPTACLE PINS AND SLIDE INTO PLACE

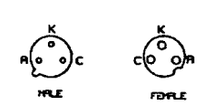

OR-1 (ITEM 100)

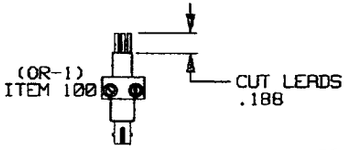

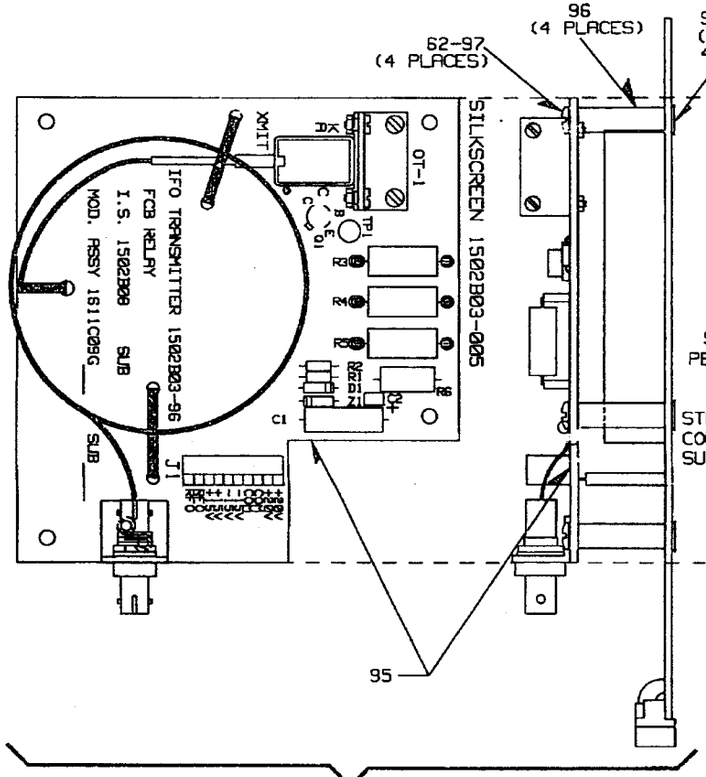

FIGURE 2

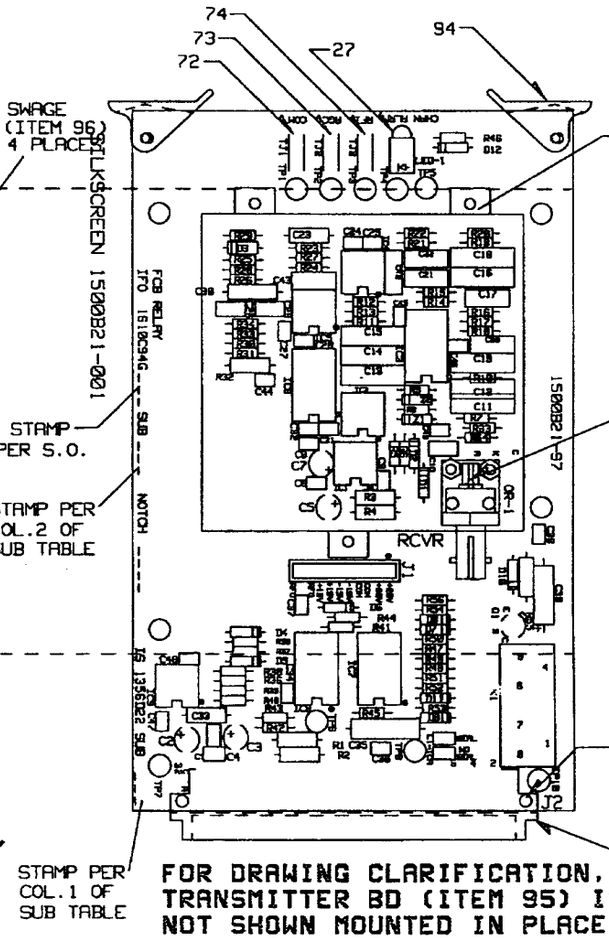

FOR DRAWING CLARIFICATION, TRANSMITTER BD (ITEM 95) IS NOT SHOWN MOUNTED IN PLACE. SEE FIGURE 2 FOR FURTHER INFORMATION.

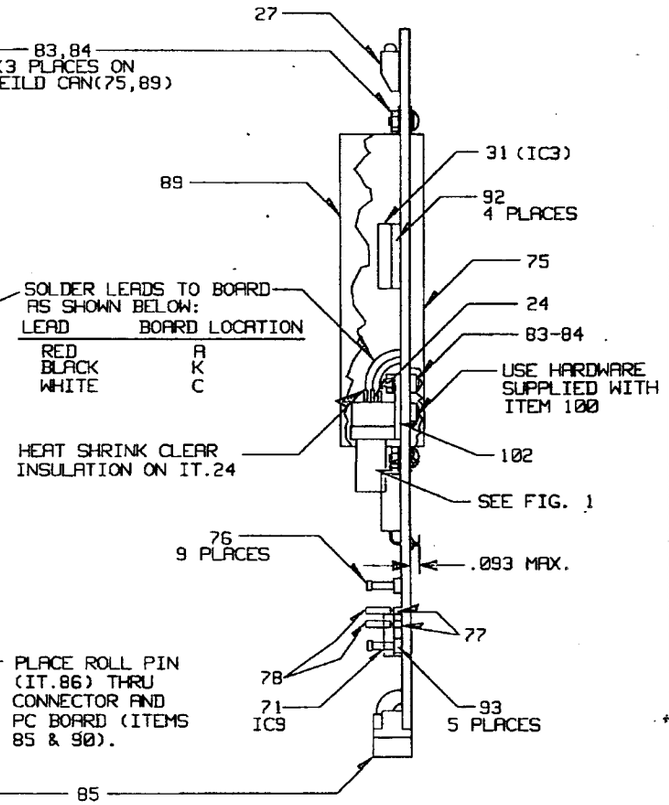

REF.
SCHEMATIC - 1356D22
COMP. LOCATION - 1610C94 (SHT 4)

NOTES:

1. SOME COMPONENTS AND ALL IC'S ARE STATIC SENSITIVE. ANTI-STATIC COMPONENT HANDLING AND MODULE ASSEMBLY GUIDELINES MUST BE FOLLOWED. COMPLETED MODULES MUST BE TRANSPORTED IN ANTI-STATIC BAGS (REF.3532A16).

2. TEST PER M 21261

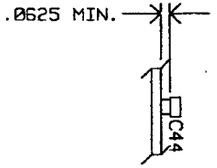

COL. 1 STAMP SCHEME SUB NO.	COL. 2 STAMP MOD. SUB NO.	ARTWORK SUB NO.
2	2	1

PART NAME	APPAR. TYPE	PART DESCRIPTION	SUB
PC BOARD	RELAY	IFO MODULE--FCB	#2

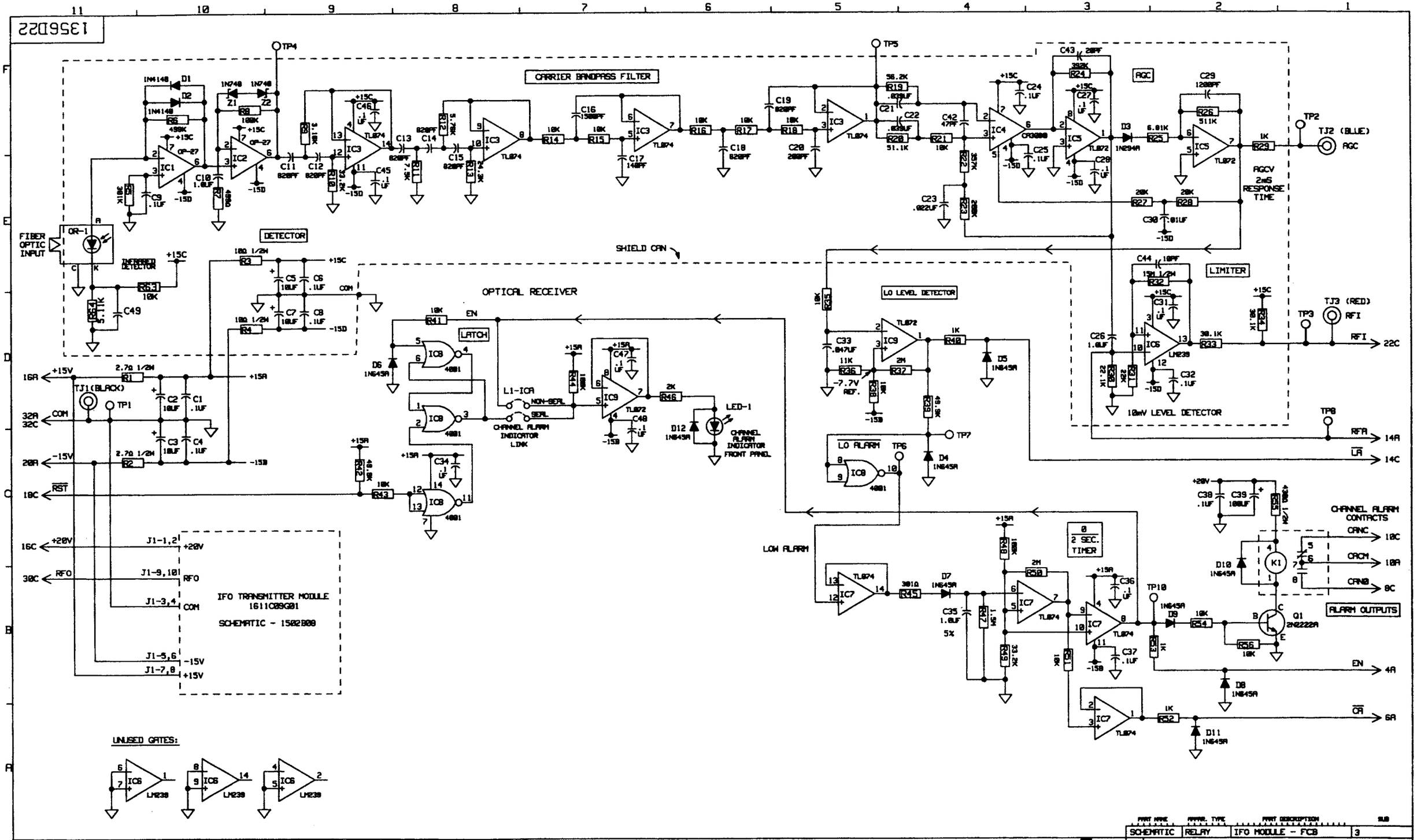
1356D22
CARRIER BANDPASS FILTER
AGC
DETECTOR
OPTICAL RECEIVER
SHIELD CAN
LIMITER
LO LEVEL DETECTOR
10mV LEVEL DETECTOR
LATCH
LO ALARM
2 SEC. TIMER
CHANNEL ALARM CONTACTS
ALARM OUTPUTS
UNUSED GATES:
IFO TRANSMITTER MODULE
1611C09G01
SCHEMATIC - 1502B00
FIBER OPTIC INPUT
AGCV 2mS RESPONSE TIME
TJ2 (BLUE) AGC
TJ3 (RED) RFI
TJ1(BLACK)
CHANNEL ALARM INDICATOR LINK
CHANNEL ALARM INDICATOR FRONT PANEL
LOW ALARM
SCHEMATIC | RELAY | IFO MODULE - FCB | 3

1502B08

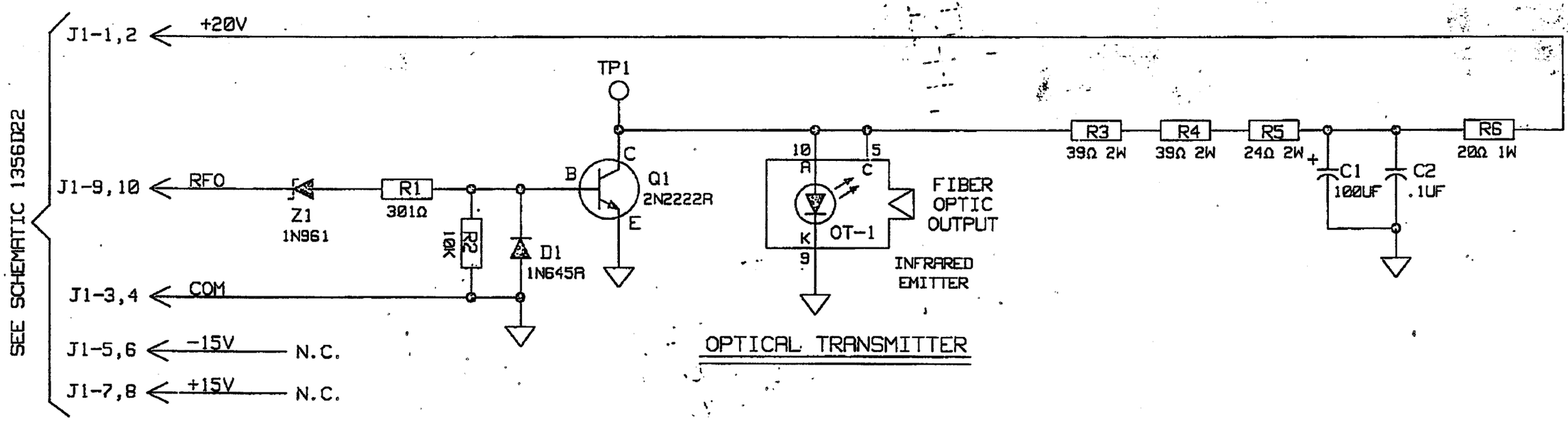

OPTICAL TRANSMITTER

REFERENCES:

MODULE ASSEMBLY - 1611C09 (IFO TRANSMITTER)
MODULE ASSEMBLY (MAIN MODULE) 1610C94
SCHEMATIC - (MAIN MODULE) - 1356D22

PART NAME	APPAR. TYPE	PART DESCRIPTION	SUB
SCHEMATIC	RELAY	IFO TRANSMITTER MODULE	1

ABB POWER T&D COMPANY INC.

TITLE SCHEMATIC-IFO TRANSMITTER (FCB RELAY)

HIGH POWER 1300nm

DFTM S. BOVENZI	02-28 1990	APPD	DWG. NO. 1502B08
CHKR.		APPD	
		APPD JWD 5/7/90	SHEET 1 OF 1

ING CODE 3

RELAY TYPE-FCB
COMPONENT LOCATION

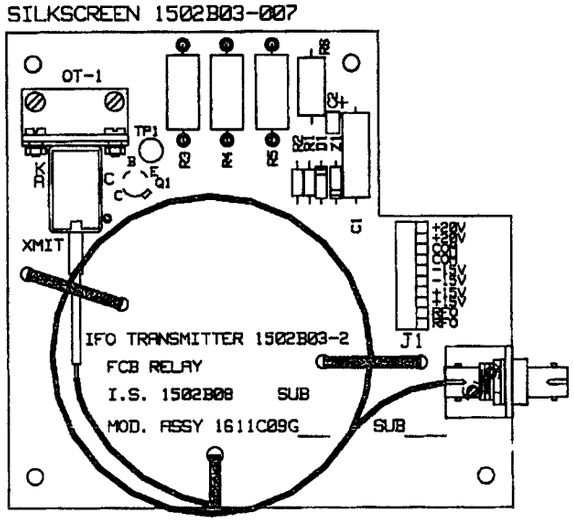

PART NAME	APPAR. TYPE	PART DESCRIPTION	SUB

DWG. NO.	DWG. SUB	PART NAME	APPAR. TYPE
1611C09	3	MOD. ASSY	RELAY

PART DESCRIPTION: AUXILIARY BD MOD. ASSY SCALE: 1 TO 1

BILL OF MATERIAL DIMENSIONS IN INCHES

FIN. CODE			
RTRV. CODE			
NOTE CODE			
FIG. NO.			
GROUP	01		

CLASS	ITEM	PART NAME	DEF.	MATERIAL SIZE / DESCRIPTION	MFR. CODE / STOCK DWG.	SIZE CODE / ITEM QR.	RTRV. CODE	NOTE CODE	FINISH	ENG. REF.	REQ.
	01	HEADER		10 POS.	3532A99	H04					1
	02	SCREW		.086-56x.250	877A257	H03					6
	03	L-WASHER		.086	183A917	H01					6
	04	NUT		.086-56 HEX.	877A220	H17					6
	05	SPLICE			9644A70	H04		A			1
	06	BRACKET			9654A70	H01					1
	07	P.C. BD.		TRANSMITTER	1502B03	H01					1
	08	SCREW		.112-40x.375	877A266	H05					0
	09	L-WASHER		.112	183A917	H02					0
	10	NUT		.112-40 HEX.	877A220	H04					0
	11	TERMINAL		TEST POINT	645?242	H01					1
	12	SCREW		.112-40x.250	877A266	H03					0
	13	RESISTOR		24 OHM 2W	187A683	H10					1
	14	SOCKET		14 PIN	3534A76	H03					1
	15	TIE WRAP			862A996	H01					3
	16	LED EMIT.			9647A35	H04		A			1
	17	BRACKET			9649A29	H01					1
	18	CAPACITOR		100uF 35V 20%	380A363	H01					1
	19	CAPACITOR		0.1uF 50V 20%	3532A29	H13					1
	20	DIODE		1N645A	837A692	H03					1
	21	RESISTOR		301 OHM .25W	3535A39	H47				1% M.F.	1
	22	RESISTOR		10K OHM .25W	3535A37	H01				1% M.F.	1
	23	RESISTOR		39 OHM 2W	187A683	H15					2
	24	RESISTOR		20 OHM 1W	629A371	H08					1
	25	TRANSIST.		2N2222A NPN	762A672	H15				40V	1
	26	ZENER		1N961 10V 5%	186A797	H07				400mW	1
	27	STANDOFF		NYLON	9640A72	H03					6

A = INSTALL AT FINAL TEST.

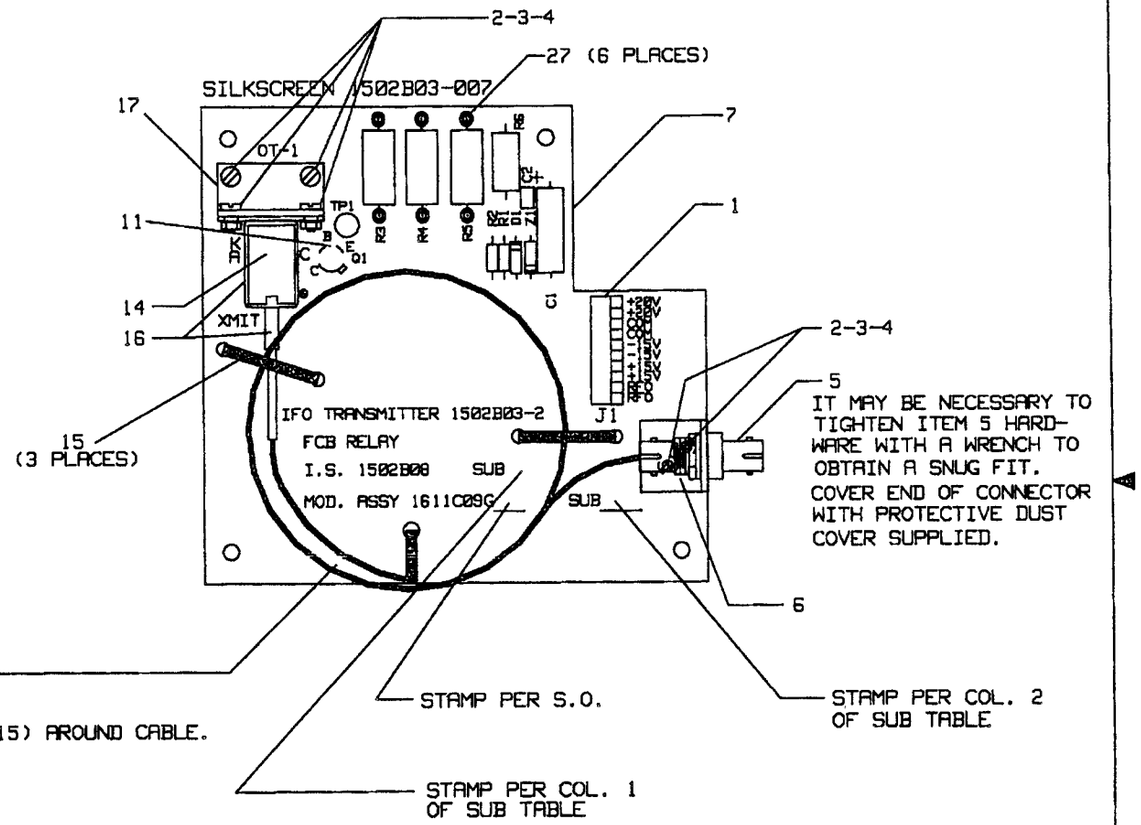

ITEM	COMP. LOC.	QTY.
13	R5	1
18	C1	1
19	C2	1
20	D1	1
21	R1	1
22	R2	1
23	R3-R4	2
24	R6	1
25	Q1	1
26	Z1	1

USE EXTREME CAUTION WHEN INSTALLING FIBER OPTIC CABLE. FORM THE CABLE AS SHOWN, MAINTAINING NO LESS THAN A 3 INCH DIAMETER BEND OF CABLE. USE SNUG, NOT TIGHT WIRE TIES (ITEM 15) AROUND CABLE.

REMOVE BLOCK PIN PROTECTOR FROM BOTTOM OF ITEM 16 BEFORE INSERTING INTO SOCKET ITEM 14.

BEFORE SHIPPING TO TEST, PLUG OTHER END OF ITEM 16 INTO ITEM 5 SPLICE.

COL. 1 STAMP SCHEME SUB NO.	COL. 2 STAMP MOD. SUB NO.	ARTWORK SUB NO.
1	3	2

REF:

SCHEMATIC - 1502B08
COMPONENT LOCATION - SHEET 2 OF THIS DRAWING.

THIRD ANGLE PROJECTION	FIRST MADE FOR ASSY DWG 1610C94
	TOLERANCE ← ON ALL DIMENSIONS UNLESS OTHERWISE