ABB Power T&D Company Inc.
Relay Division
Coral Springs, FL 33065

TYPE CVX AND CVX-1 SYNCHRO-VERIFIER RELAYS

Effective : April 1990
PRELIMINARY

CAUTION

Before putting the Synchro-Verifier into service, remove all blocking inserted for the purpose of securing the parts during shipment. Make sure that all moving parts operate freely. Inspect the contacts to see that they are clean and close properly, and operate the relay to check the settings and electrical connections.

1. APPLICATION

This instruction leaflet applies to the following types of relays:

- CVX Synchro-Verifier Relay
- CVX-1 Syncho-Verifier Relay with line and bus voltage sensing relays.

The synchro-verifier is used to verify the condition of synchronism existing between two system voltages. The contacts will close when these voltages are within set limits.

The synchro-verifier is not an automatic synchronizer and should not be used as such. Automatic synchronizers are available which permit closing ahead of synchronism at an angle of phase advance proportional to the beat frequencies and determined by the speed of operation of the circuit breaker so that the two systems are connected right on synchronism.

A common application of the synchro-verifier is in conjunction with automatic reclosing equipment or loop systems fed by generating stations at two or more points. When a line section trips out, the synchro-verifier is used at one terminal to check synchronism after the remote terminal is reclosed. If the two systems are in synchronism, the synchro-verifier permits the automatic reclosing equipment to reclose the breaker.

Some provision, such as a reclosing relay, must be used to control closing through the CVX(-1) contacts to avoid the possibility of pumping when closing into a fault.

2. CONSTRUCTION AND OPERATION

The type CVX relay, Figure 1, consists of an operating element and a restraining element mounted on a common disc.

The CVX-1 Relay, Figure 2, consists of two telephone type ac voltage sensing relays in addition to the components of the CVX relay.

2.1 Operating Element

The operating unit consists of an "E" type laminated electromagnet with two main coils on the center leg, a lag coil on the left leg, and a lag coil on the right leg. A resistor is connected across the shading coil.

When the relay is energized with two voltages, a flux is produced that is proportional to the sum of the applied voltages. This flux divides and returns through the outer legs of the electromagnet. The lag coil on the left leg causes the flux in that leg to lag the main pole flux. The out of

All possible contingencies which may arise during installation, operation or maintenance, and all details and variations of this equipment do not purport to be covered by these instructions. If further information is desired by purchaser regarding this particular installation, operation of maintenance of this equipment, the local Asea Brown Boveri representative should be contacted.

phase fluxes thus produced in the disc gap causes a contact closing torque. The resistor connected across the lag coil of the electromagnet provides adjustment for different operating circles of the relay.

2.2 Restraining Element

The restraining element consists of an "E" type laminated electromagnet with two main coils on its center leg and a lag coil on its left leg. A flux proportional to the difference of the applied voltages to the relay is produced. This flux divides and returns through the outer legs of the electromagnet. The lag coil causes the flux through the leg to lag the main pole flux. The out-of-phase fluxes thus produced in the disc gap causes a contact opening torque.

2.3 Indicating Contactor Switch Unit (ICS) When Used

The dc indicating contactor switch is a small clapper-type device. A magnetic armature, to which leaf-spring mounted contacts are attached is attracted to the magnetic core upon energization of the switch. When the switch closes, the moving contacts bridge two stationary contacts, completing the trip circuit. Also, during this operation, two fingers on the armature deflect a spring located on the front of the switch, which allows the operation indicator target to drop.

The front spring, in addition to holding the target, provides restraint for the armature and thus controls the pick-up value of the switch.

2.4 Telephone Relay - CVX-1 Only

The telephone operating relay units are fast operating types energized by the application of an ac voltage. In these relays, an electromagnet energized by ac voltage, attracts a right angle armature which operates a set of contacts.

2.5 Operation with External Voltage Relays

The connections shown in Figure 8 using external type SG voltages relays will provide the following operation:

1. Close the breaker when the bus is live and the line is dead, through the 59B make contact and 27L break contact.
2. Close the breaker when the line is live and the bus is dead, through the 59L make contact and 27B make contact.
3. Close the breaker when the line and bus are both live and when their respective voltages are approximately normal, equal, in phase, and of the same frequency, through the CVX contact.

It is recommended that the number of reclosures be limited by using either a single or a multi-shot reclosing relay in conjunction with the CVX and SG relays.

2.6 CVX-1 Operation

In the CVX-1, the internal V_1 and V_2 perform the functions of external 59B and 27L relays respectively.

The connections shown in Figure 10 and Figure 11 using the type CVX-1 relay will provide the following operation:

1. Close the breaker when the bus is live and the line is dead, through the V_1 make contact and V_2 break contact.
2. Close the breaker when the line is alive and the bus is dead, through the V_2 make contact and V_1 break contact.
3. Close the breaker when the line and bus are both live and their respective voltages are approximately normal, equal, in phase and of the same frequency through the CVX -1 contact.

It is recommended that the number of reclosures be limited by using either a single - or a multi-shot reclosing relay in conjunction with the CVX-1 relay.

3. CHARACTERISTICS

The type CVX and CVX-1 relays can be adjusted for operating circles from 20° to 60° as shown in Figure 15. The relay is typically calibrated for the 20° circle as shipped from the factory.

These circles apply when one side has rated voltage. The relay operates if the other voltages falls within the appropriate circle.

The operating time of the relay is shown in Figure 16. These time curves are obtained from the #11 time dial setting when the applied voltages are equal to rated voltage, in phase and of the same frequency. Shorter operating times can be obtained at different time dial settings as shown in Figure 17.

Figure 18 shows the maximum slip frequency for which operation of the CVX element can occur. The maximum slip frequency is a function of the circle and time dial settings. This characteristic is of interest in estimating the worst case angular difference at the instant of breaker closure, for cases where the two systems are slipping slowly.

Figure 19 shows typical CVX reset times for 20°, 40°, and 60° circle settings.

4. BURDEN

The burden imposed on each potential source by the CVX relay, with rated voltage applied to both circuits of the relay is as follows:

	60 Hertz	50 Hertz
Volt-Amperes	15.4	23.3
Power factor	.422	.309
Watts	6.5	7.2

The burden of the CVX relay with rated voltage applied to one circuit is as follows:

	60 Hertz	50 Hertz
Volt-Amperes	10.8	13.8
Power factor	.422	.309
Watts	4.6	4.2

5. SETTINGS

5.1 Disc Unit

As shipped from the factory the relays are calibrated for a 20 degree circle. Other operating circles from 20° to 60° can be obtained by adjusting the left hand resistor (front view) in the relay. The procedure is described under circles other than 20°.

Set the time dial so that the relay will not operate when the systems are swinging too fast. The #11 time dial is recommended when the 60° circle setting is used. A setting of #4 time dial or higher is recommended with the 40°, and circle. A setting as low as 1/2 time dial should be satisfactory with a 20° setting. If a longer delay is desired, a higher time dial setting may be used.

To evaluate the effect of time dial and circle settings on the worst-case phase-angle difference between the two systems at the instant of breaker closure, refer to Figure 16. For example, assume a 40° circle and #4 time dial setting. Also assume that the systems are slipping at a frequency of 0.048 hertz, Figure 18 which is the maximum slip for which the relay will operate. This means that the relay contacts closed just as the one voltage vector moves out of the circle. This would mean that the system would be 40° out-of-phase at the instant that the breaker close circuit is energized. The phase angle at the instant of breaker closure is:

$$\emptyset = 40° + 0.048 \times 360TB = 40° + 17.3TB$$

where TB = breaker closing time in seconds.

Let TB = 0.5 Seconds

Then $40° + 17.3 \times 0.5 = 48.6°$

6. INSTALLATION

The relays should be mounted on switchboard panels or their equivalent in a location free from dirt, moisture, excessive vibration, and heat. Mount the relay vertically by means of the far mounting holes on the flanges for semi-flush mounting or by means of the rear mounting stud or studs for projection mounting. Either a mounting stud or the mounting screws may be utilized for grounding the relay. The electrical connections may be made directly to the terminals by means of screws for steel panel mounting or the terminal studs furnished with the relay for thick panel mounting. The terminal studs may be easily removed or inserted by locking two nuts on the stud and then turning the proper nut with a wrench. See Figure 27 for Outline and Drilling Plan. For detailed FT Case information refer to I.L. 41-076.

7. ADJUSTMENTS AND MAINTENANCE

The proper adjustments to insure correct operation of this relay have been made at the factory. Upon receipt of the relay, no customer adjustments, other than those covered under "Settings" should be required.

8. ACCEPTANCE CHECK

The following check is recommended to insure that the relay is in proper working order:

8.1 INDICATING CONTACTOR SWITCH (ICS)

Using the appropriate Figures 22-26, close the main relay contacts and pass sufficient dc current through the disc-unit contact circuit to close the contacts of the ICS. This value of current should be not greater than the value marked on the nameplate. The operation indicator target should drop freely.

For proper contact adjustment, insert a .030" feeler gauge between the core pin and the armature. Hold the armature closed against the core pin and gauge and adjust the stationary contacts such that they just make with the moving contact. Both stationary contacts should make at approximately the same time. The contact follow will be approximately 1/64" to 3/64".

8.2 Disc Units

8.2.1 Contacts

The index mark on the movement frame will coincide with the "0" mark on the time dial when the stationary contact has been moved through approximately one-half of its normal deflection. Therefore, with the stationary contact resting against the backstop, the index mark is offset to the right of the "0" mark by approximately 0.020". The placement of the various time dial positions in line with the index mark will give operating times as shown on the time curve.

8.2.2 Operating Circle

Connect the CVX relay per the test diagram, Figure 22. CVX-1 relays should be connected in a similar manner to correspond with the wiring of the particular style CVX-1 using Figures 23-26. The contacts should just close under the following two conditions:

1. When V_2 = V_1 rated voltage and their phase difference is between 18° and 22° (either leading or lagging). Verify that the contacts should just open at approximately the make angle plus 4 degrees.
2. When V_1 = rated voltage and V_2 is increased from a low value to 94 ±4V in phase with V_1.

8.2.3 Time Curve

With the time dial set at position 11, the contact should close in 20 ±1 seconds when V_1 and V_2, equal to rated voltage at zero phase angle, are applied.

8.2.4 Telephone Relays (CVX-1 Only)

Apply ac voltage to each telephone relay circuit. The telephone relay should pickup when 95 volts ac is applied.

9. ROUTINE MAINTENANCE

All relays should be inspected periodically and the time of operation should be checked at least once every two years or at such other time intervals as may be dictated by experience to be suitable to the particular application.

All contacts should be periodically cleaned. A contact burnisher S#182A836H01 is recommended for this purpose. The use of abrasive material for cleaning contacts is not recommended, because of the danger of embedding small particles in the face of the soft silver contact and thus impairing the contact.

10. CALIBRATION

Use the following procedure for calibrating the relay if the relay has been taken apart, received repairs, or the adjustments have been disturbed. This procedure should not be used until it is apparent that the relay is not in the proper working order (See Acceptance Check).

10.1 Contacts

For ICS contacts see section 8.1

For Disc contacts see section 8.2.1

10.2 Preliminary Adjustments

Remove the permanent magnet from the relay and set the time dial on the number 11 position. Next unwind the spring for zero tension on the number 11 position. This can best be noticed by unwinding the spring until the contact will not move when the time dial is moved a small distance beyond the number 11 position.

The spring convolutions may touch during this operation and the outer convolutions may hit other surfaces of the relay. This interference should be disregarded because its effect on the final calibration will be negligible. The reason for unwinding the spring is that the amount of tension on the reset spring affects the diameter of the circle. Hence the spring tension has to be removed initially so that only the left hand resistor will affect the operating circle.

10.3 Spurious Torque

a) With the relay set as per the preliminary adjustments, open both lag coil circuits of the rear electromagnet. This can be done by opening the screw connection on both the lag coils of the rear electromagnet.

b) Connect the relay to test circuit of Figure 22 for CVX, or Figures 23-26 for CVX-1, and then apply rated voltage at zero phase angle on both circuits. All voltage settings are to be within 1/4 volts.

10.4 Centering the Circle

a) De-energize the relay and close the left lag coil circuit front view of the rear electromagnet and set the left hand resistor at approximately one-third of its resistance.

b) Adjust the phase shifter on the lagging direction until the contacts just close with V_1 and V_2 equal to rated voltage. Note the angle at which the contacts just close.

c) Then adjust the phase shifter in the leading direction until the contacts just close with V_1 and V_2 equal to rated voltage. If the latter angle is not within ±1 degree of the former angle, adjust the right hand resistor (front view) until the two angles and within ±1 degree of each other.

10.5 Spring Adjustment

a) Adjust the left potentiometer (front view) such that the moving contact just leaves and returns to the backstop of the time dial at the number 11 position between 30° and 31° for CVX and between 35° and 36° for CVX-1 (leading or lagging: increasing the resistor decreases the angle) with rated voltage on both sides.

b) Change the angle to 20° and adjust the reset spring until the contacts just make.

c) Rotate the phase shifter to move V_2 through zero phase angle where the contacts just make. The contacts should just close at an angle of 20 ± 2 degrees with V_1 and V_2 equal to rated voltage.

d) With V_1 equal to rated voltage, the contacts should just close when V_2 is increased to 94 ±4V in phase with V_1. If necessary, readjust spring slightly to obtain this condition. The relay is now calibrated for a 20 degree circle. Spring convolutions must not touch after this adjustment.

e) Reconnect the right lag coil of rear electromagnet (front view) and adjust the potentiometer to achieve the 20 degree circle (where the contacts just close at an angle of 20 ± 2°.

f) Check: With V_1 = 120 Volts and the phase angle at zero degrees, verify that the contacts just make when the V_2 is increased from zero toward 92 to 96 volts (Adjust spring if necessary), and drop out at approximately 88 Volts.

10.6 Time Curve

Install the permanent magnet on the relay. Adjust the permanent magnet keeper until the operating time of the relay from the number 11 time dial position is 20 ± seconds with V_1 and V_2 equal to rated voltage at zero phase angle.

10.7 Circles Other Than 20 Degrees

This adjustment should not be done until the above adjustments for a 20 degree circle have been completed.

If another circle other than 20 degrees is desired, adjust the left hand resistor to obtain the desired circle. For example, if a 40 degree circle is desired, adjust the left hand potentiometer (front view) until the contacts just close with V_1 and V_2 equal to rated voltage at 40 degrees phase angle. It may be necessary to readjust the right hand potentiometer to position the desired circle symmetrically about the zero degree line. See "Centering Circle" above for procedure. The time for the operation will be as shown in the time curves of Figure 17.

11. RENEWAL PARTS

Repair work can be done most satisfactorily at the factory. However, interchangeable parts can be furnished to the customers who are equipped for doing repair work. When ordering parts, always give the complete nameplate data.

LIST OF FIGURES

Figure 1 CVX-1 Relay Front View Out of Case

Figure 2 CVX-1 Relay Rear View Out of Case

Figure 3 Relay-Type CVX Synchro-Verifier W/ICS (0.2-2 amps), with Isolated Potential Circuits. Close AC or DC Breakers (DC supply still needed). Calibrate for 60Hz in Type FT-21 case ---------- 9654A78

Figure 4 Relay-Type CVX-1 Synchro-Verifier W/ICS (0.2-2 amps), HBDL/HLDB. Outputs isolated from CVX-1 Output. Common Potential Circuits HBDL/HLDB Outputs separated from one another. Calibrate for 60Hz in Type FT-21 case ---------- 9654A72

Figure 5 Relay-Type CVX-1 Synchro-Verifier W/ICS (0.2-2 amps), with Isolated Potential Circuits Synch, HBDL, HLDB all brought out separately. Calibrate for 60Hz in Type FT-21 case ---------- 9654A73

Figure 6 Relay-Type CVX-1 Synchro-Verifier W/ICS (.2-2 amps), with Isolated Potential Circuits 2 internal switches - HBDL, HLDB, Both, Neither (Synch. Only) Synch-Check Supervised by V1 & V2 pick up. Close AC or DC Breakers (DC Supply still needed) Calibrate for 60HZ in Type FT-21 case---------- 9654A74

Figure 7 Relay-Type CVX-1 Synchro-Verifier W/ICS (0.2-2 amps), with Common Potential Circuits Synch, HBDL, HLDB all brought out separately. Potential supply transfer output (for EM Reclosing Relays etc.). Calibrate for 60Hz in Type FT-21 case---------- 9654A80

Figure 8 External Schematic of the Type CVX Synchro-Verifier with Isolated Potential Circuits for AC Breaker close circuit ---------- 9654A94

Figure 9 External Schematic of the Type CVX Synchro-Verifier with Isolated Potential Circuits for DC Breaker close circuit ---------- 9654A93

Figure 10 External Schematic of the Type CVX-1 Synchro-Verifier with Common Potential Circuits ---------- 9654A97

Figure 11 External Schematic of the Type CVX-1 Synchro-Verifier with Isolated Potential Circuits ---------- 9654A95

Figure 12 External Schematic of the Type CVX-1 Synchro-Verifier with Isolated Potential Circuits for AC Breaker close circuit ---------- 9654A99

Figure 13 External Schematic of the Type CVX-1 Synchro-Verifier with Isolated Potential Circuits for DC Breaker close circuit ---------- 9654A98

Figure 14 External Schematic of the Type CVX-1 Synchro-Verifier with Common Potential Circuits ---------- 9654A96

Figure 15 Curve ---------- 184A997

Figure 16 Curve ---------- 184A998

Figure 17 Curve ---------- 185A999

Figure 18 Curve ---------- 185A123

Figure 19 Curve ---------- 619595

Figure 20 Curve ---------- 471191

Figure 21 Test Diagram Type CVX Relay With ICS ---------- 471192

Figure 22 Relay-Type CVX Synchro-Verifier W/ISC (0.2-2 Amps), With Isolated Potential Circuits Close AC or DC Breakers (DC Supply Still Needed) Calibrate for 60Hz In Type FT-21 Case ---------- 1502B27

Figure 23 Relay-Type CVX-1 synchro-Verifier W/ICS (0.2-2 Amps), HBDL/HLDB Outputs Isolated From CVX-1 Output (Big Rivers Requirement). Common Potential Circuits HDL/HLDB Outputs Separated From One Another Calibrate for 60Hz in Type FT-21 Case ---------- 1502B25

Figure 24 Relay-Type CVX-1 Synchro-Verifier W/ICS (0.2-2 Amps), with Isolated Potential Circuits SYnch, HBDL, HLDB All Brought Out Separately Calibrate for 60HZ inType FT-21 Case ---------- 1502B26

Figure 25 Relay-Type CVX-1 Synchro-Verifier W/ ICS (2.-2 Amps), With Isolated Potential Circuits 2 Internal Switches -HBDL - HLDB, Both, Neither (Synch. Only) Synch-Check supervised by V1 & V2 pickup. Close AC or DC Breakers (DC Supply Still Needed) Calibrate for 60HZ In Type FT-21 Case ---------- 1502B23

Figure 26 Relay -Type CVX-1 Sycchro-Verifier W/ICS (0.2-2 Amps), With Common Potential Circuits Synch, HBDL, HLDB All Brought Out Separately. Potential Supply Transfer Output (For EM Reclosing Relays Etc.) Calibrate for 60Hz In Type FT-21 Case ---------- 1502B24

Figure 27 Outline and Drilling Drawing ---------- 57D7901

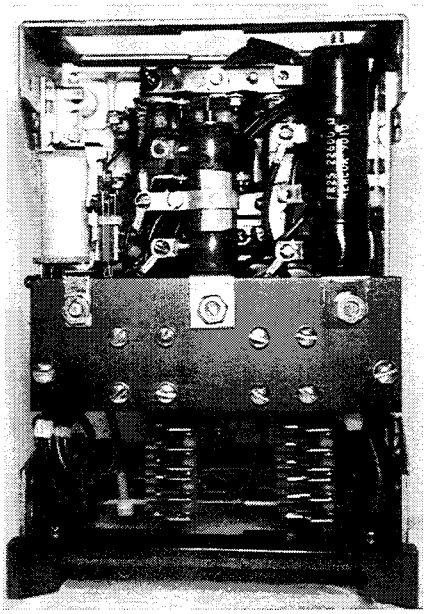

Figure 1. CVX-1 Relay Front View Out of Case

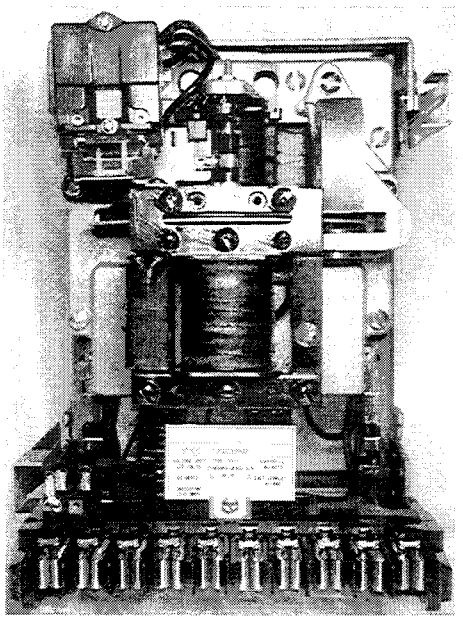

Figure 2. CVX-1 Relay Rear View Out of Case

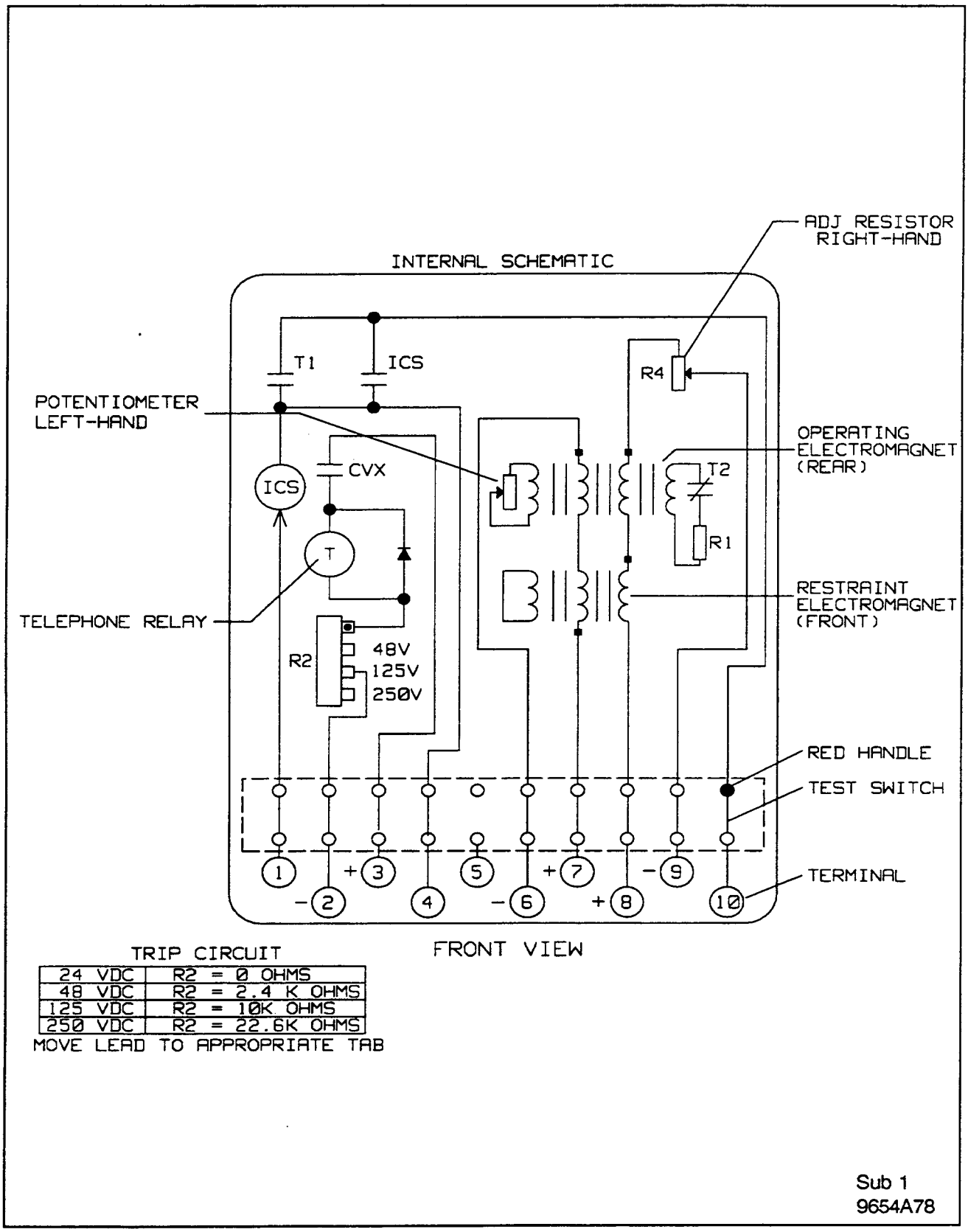

* **Figure 3.** Relay-Type CVX Synchro-Verifier W/ICS (0.2-2 amps), with isolated potential Circuits Close AC or DC Breakers (DC Supply Still Needed) Calibrate for 60Hz in Type FT-21 Case.

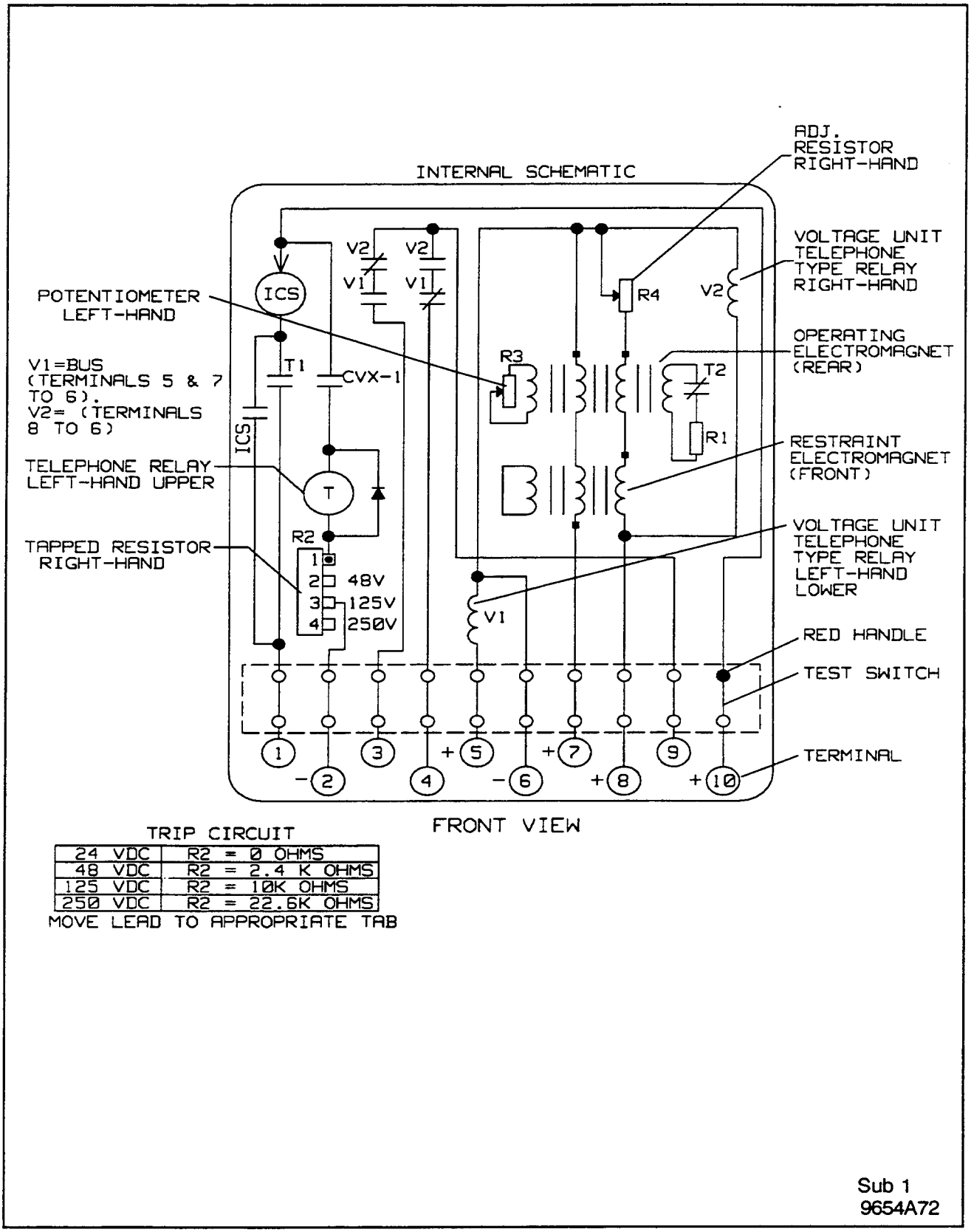

* **Figure 4.** Relay-Type CVX-1 Synchro-Verifier W/ICS (02.2 amps), HBDL/HLDB outputs isolated from CVX-1 output. Common Potential Circuits. HBDL/HLDB outputs separated from one another. Calibrate for 60Hz in Type FT-2 Case.

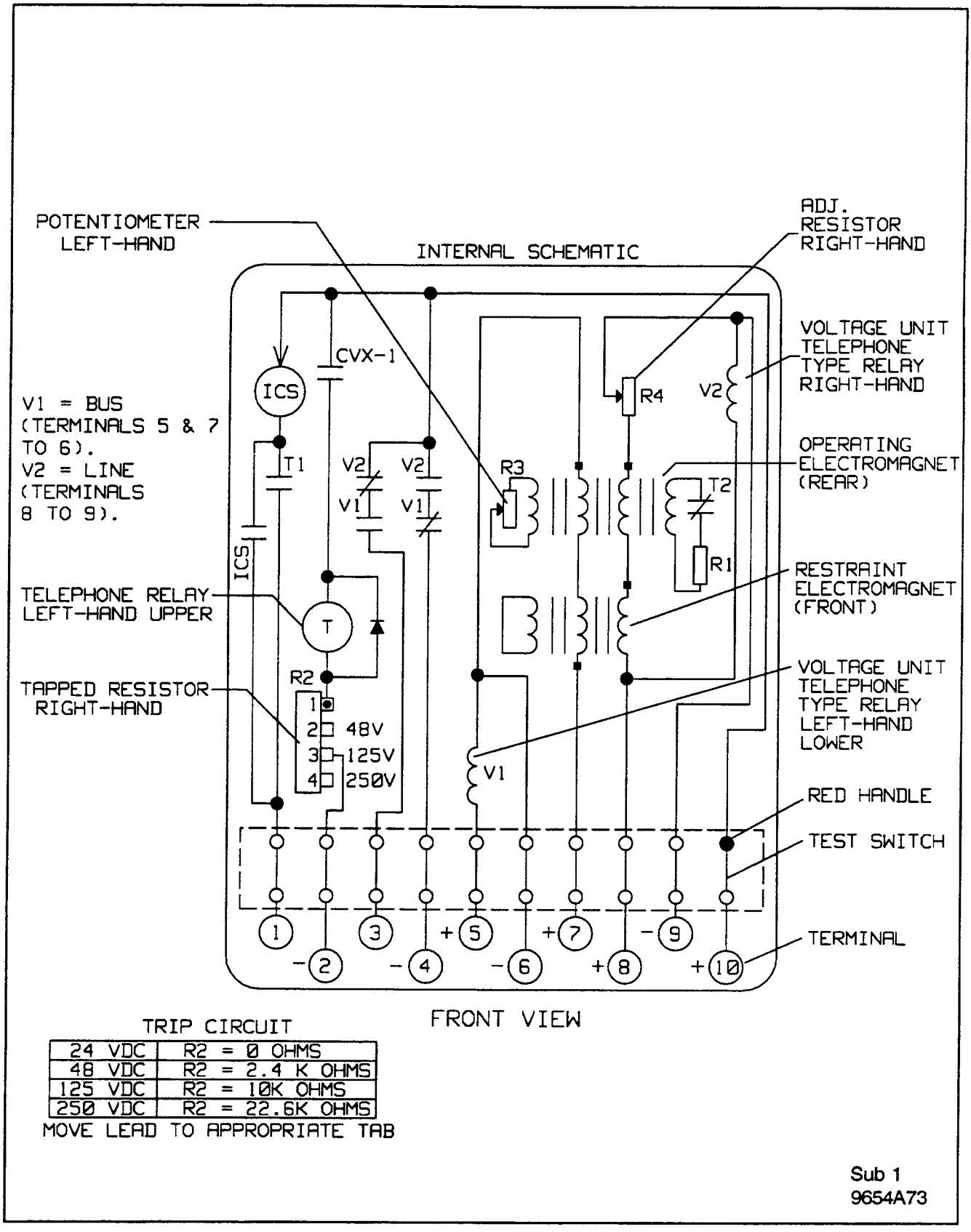

TRIP CIRCUIT

24 VDC	R2 = 0 OHMS
48 VDC	R2 = 2.4 K OHMS
125 VDC	R2 = 10K OHMS
250 VDC	R2 = 22.6K OHMS

MOVE LEAD TO APPROPRIATE TAB

* **Figure 5.** Relay-Type CVX-1 Synchro-Verifier W/ICS (0.2-2 amps), with isolated potential circuits. Synch, HBDL, HLDB all brought out separately. Calibrate for 60Hz in Type FT-21 case.

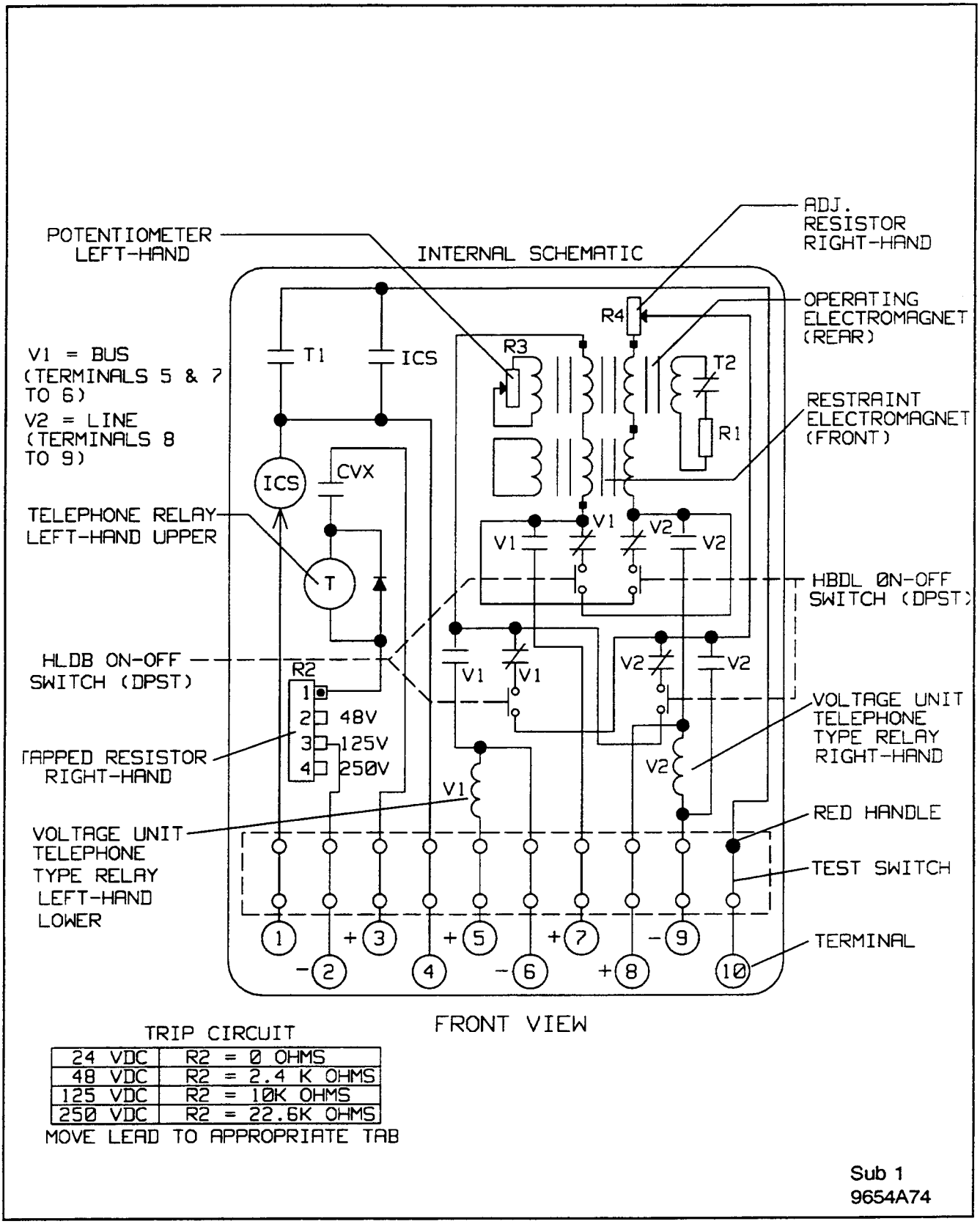

TRIP CIRCUIT

24 VDC	R2 = 0 OHMS
48 VDC	R2 = 2.4 K OHMS
125 VDC	R2 = 10K OHMS
250 VDC	R2 = 22.6K OHMS

MOVE LEAD TO APPROPRIATE TAB

* **Figure 6.** Relay-Type CVX-1 Synchro-Verifier W/ICS (.2-2 amps), with isolated potential circuits, 2 internal switches - HBDL, HLDB, Both, Neither (Synch. Only) Synch-Check supervised by V1 & V2 pick up. Close AC or DC Breakers (DC Supply still needed) Calibrate for 60Hz in Type FT-21 case.

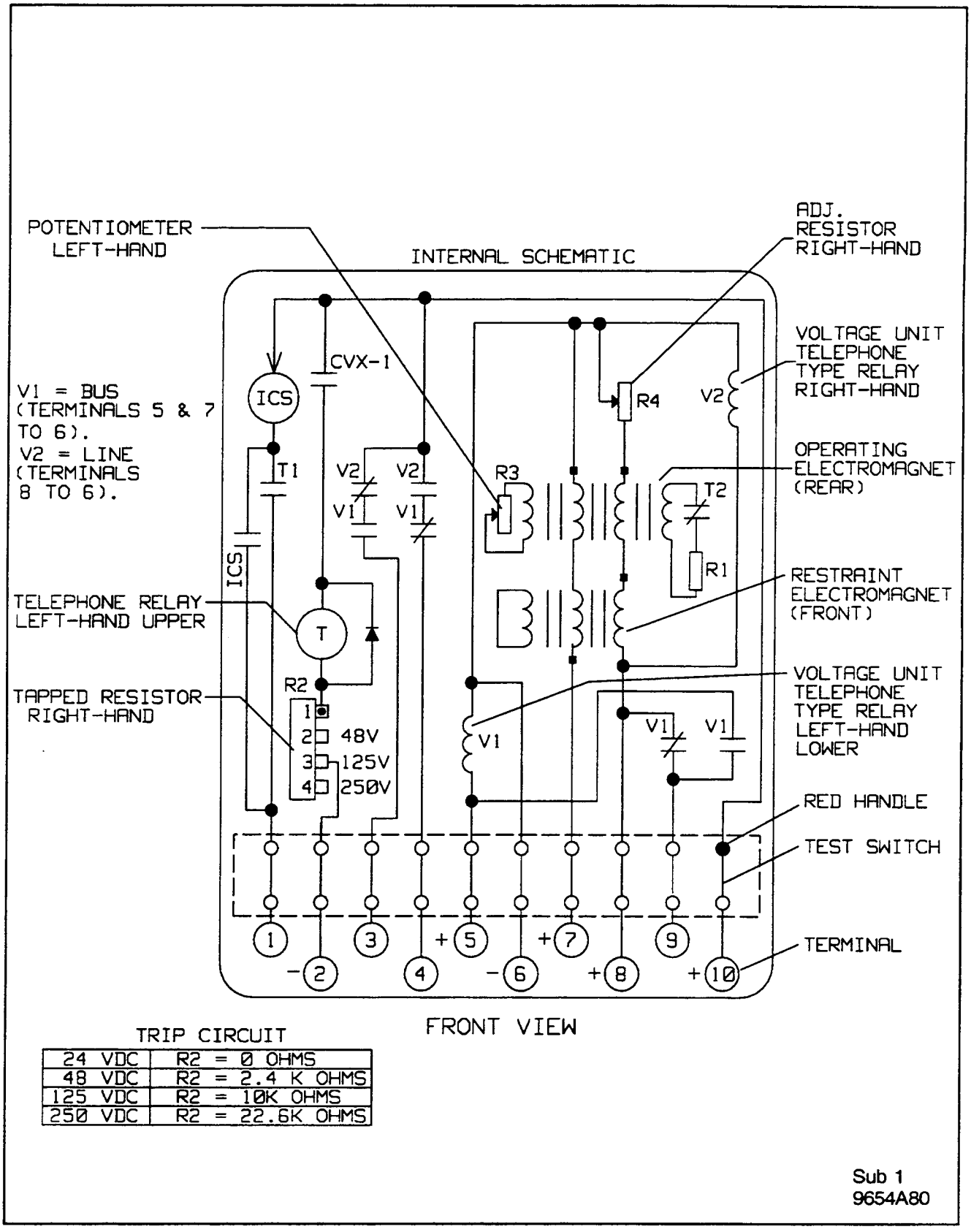

TRIP CIRCUIT

24 VDC	R2 = 0 OHMS
48 VDC	R2 = 2.4 K OHMS
125 VDC	R2 = 10K OHMS
250 VDC	R2 = 22.6K OHMS

Figure 7. Relay-Type CVX-1 Synchro-Verifier W/ICS (0.2-2 amps), with common potential circuits. Synch, HBDL, HLDB all brought out separately. Potential supply transfer output (for EM Reclosing Relays etc). Calibrate for 60Hz in Type FT-21 case.

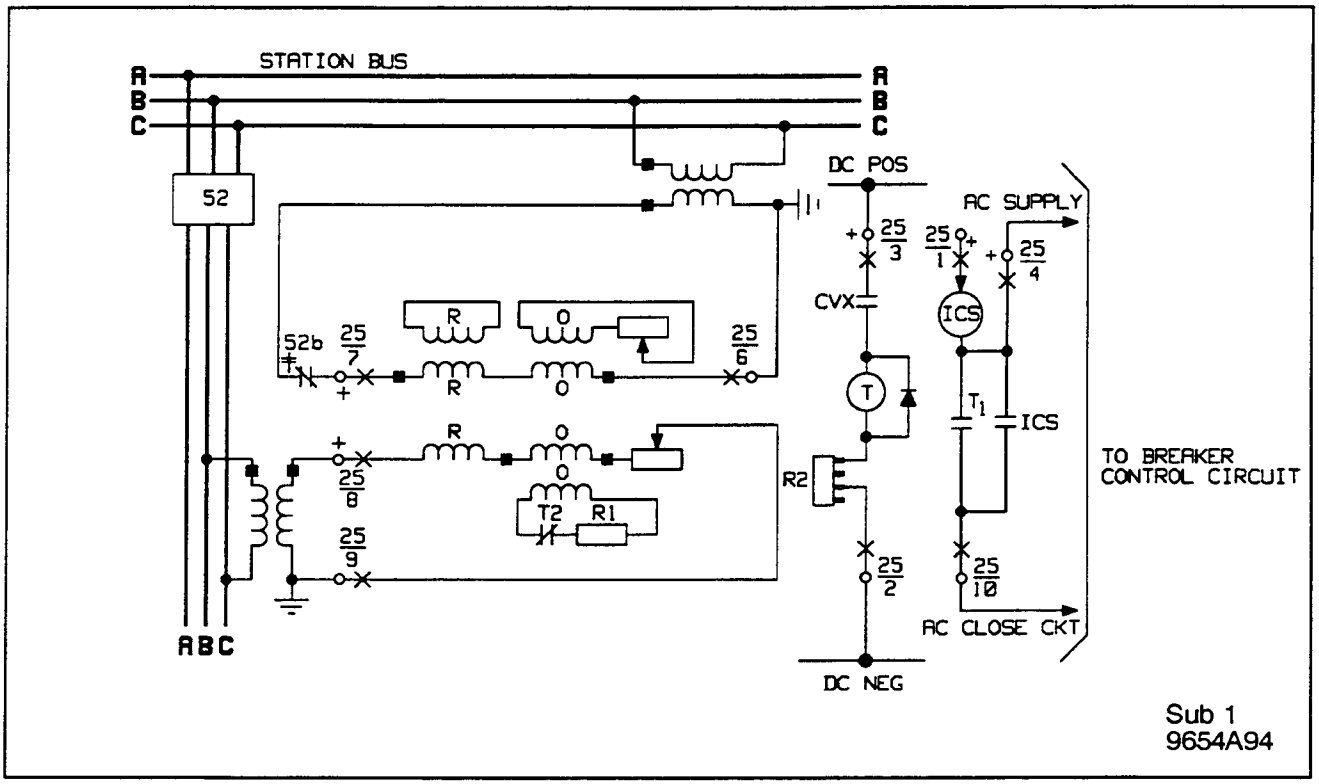

Figure 8. External Schematic of the Type CVX Synchro-Verifier with Isolated Potential Circuits for AC Breaker Close Circuit.

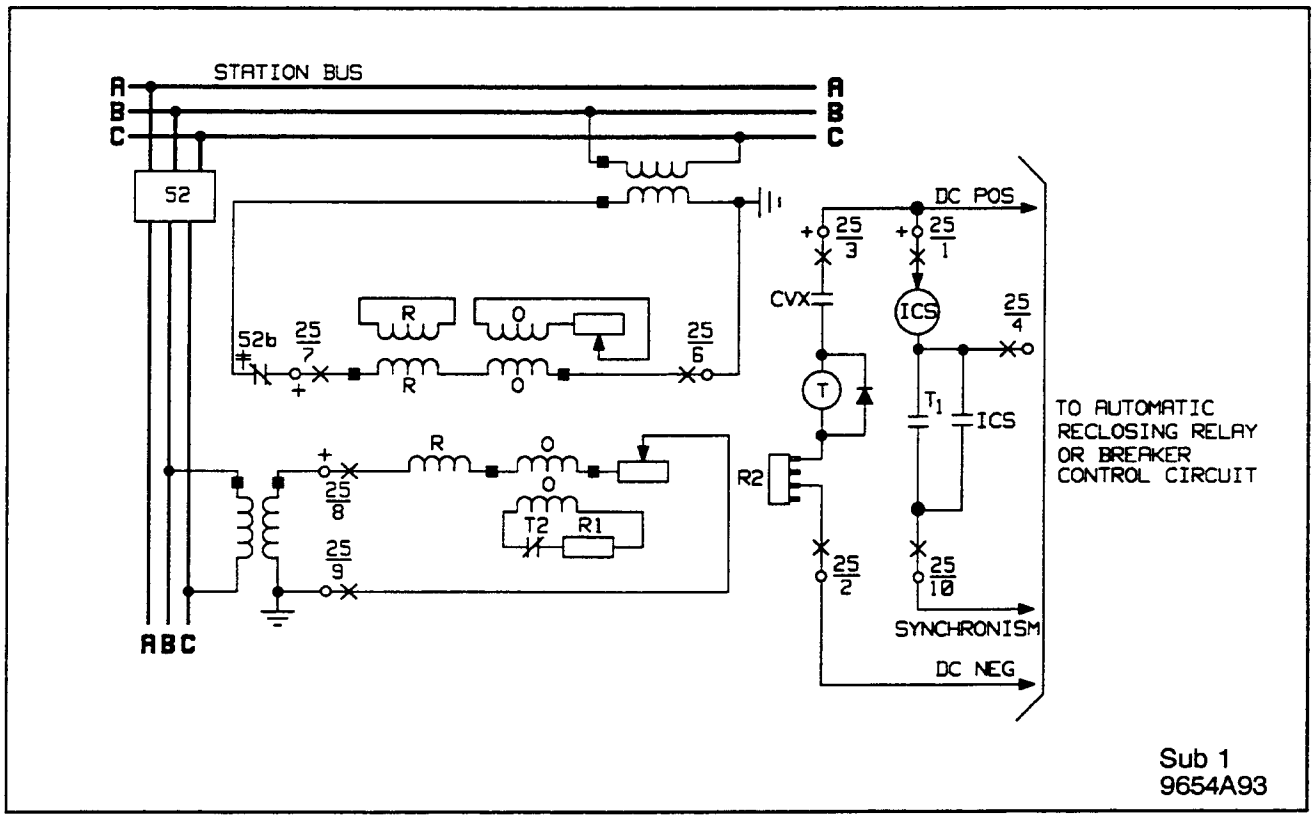

Figure 9. External Schematic of the Type CVX Synchro-Verifier With Isolated Potential Circuits for DC Breaker Close Circuit.

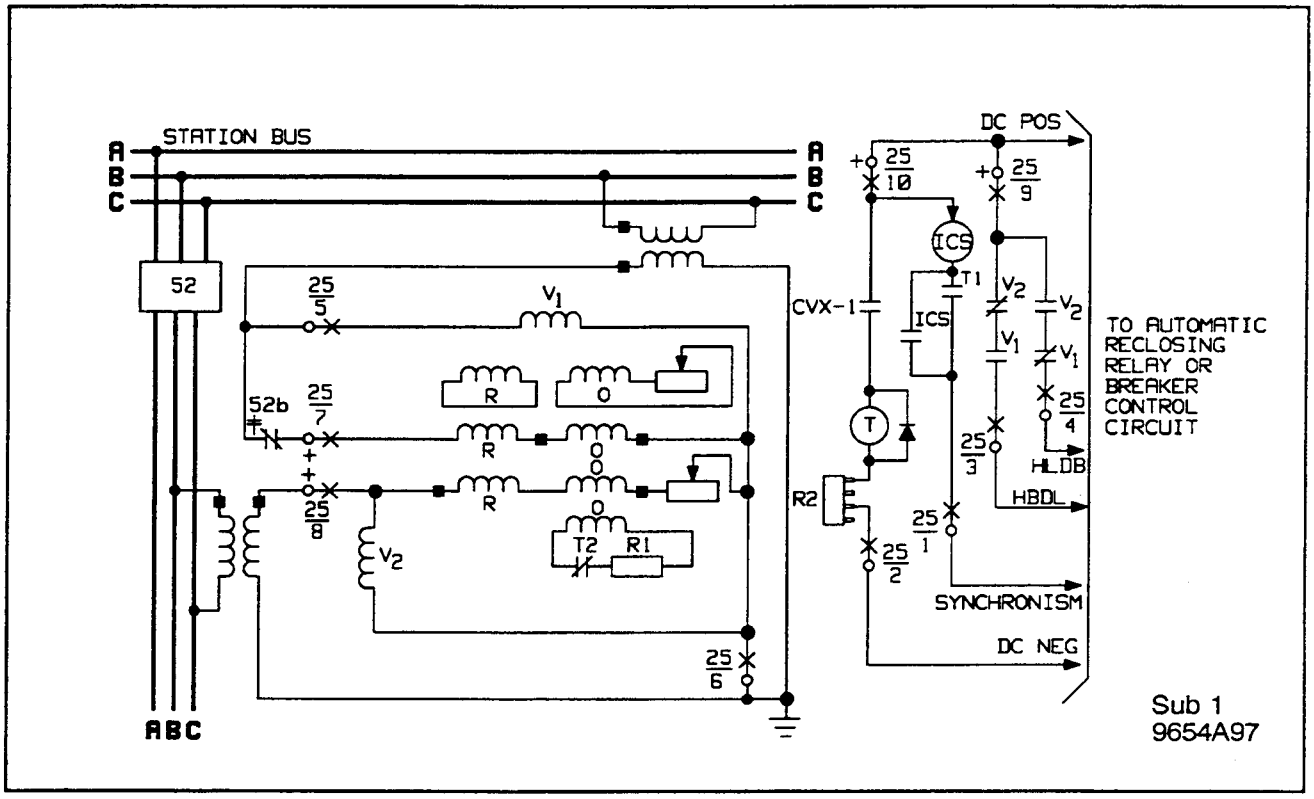

* **Figure 10.** External Schematic of the Type CVX -1 Synchro-Verifier with Common Potential Circuits. Hot Line-Hot Bus Reclosing and Isolated Hot Line-Dead Bus, Hot Bus-Dead Line Reclosing.

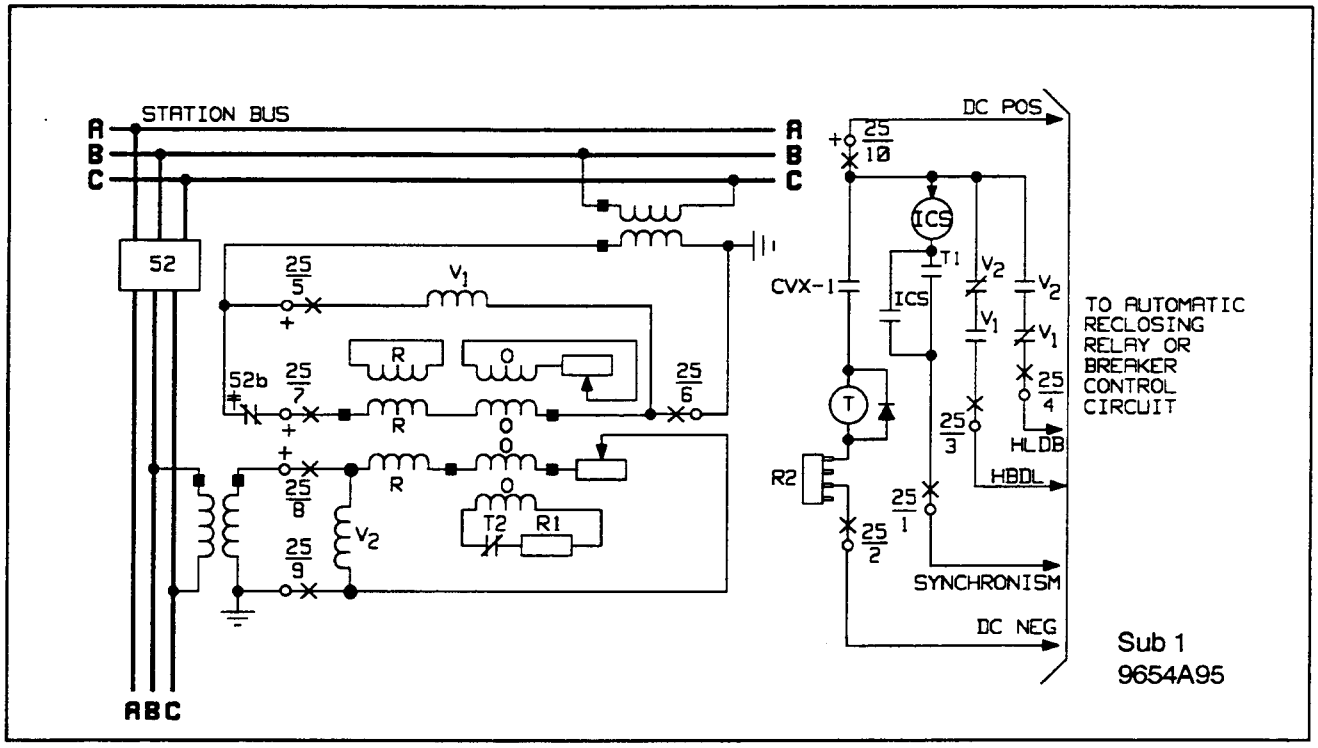

***Figure 11.** External Schematic of the Type CVX-1 Synchro-Verifier with Isolated Potential Circuits. Hot Line-Hot Bus, Hot Line-Dead Bus, and Hot Bus-Dead Line Reclosing.

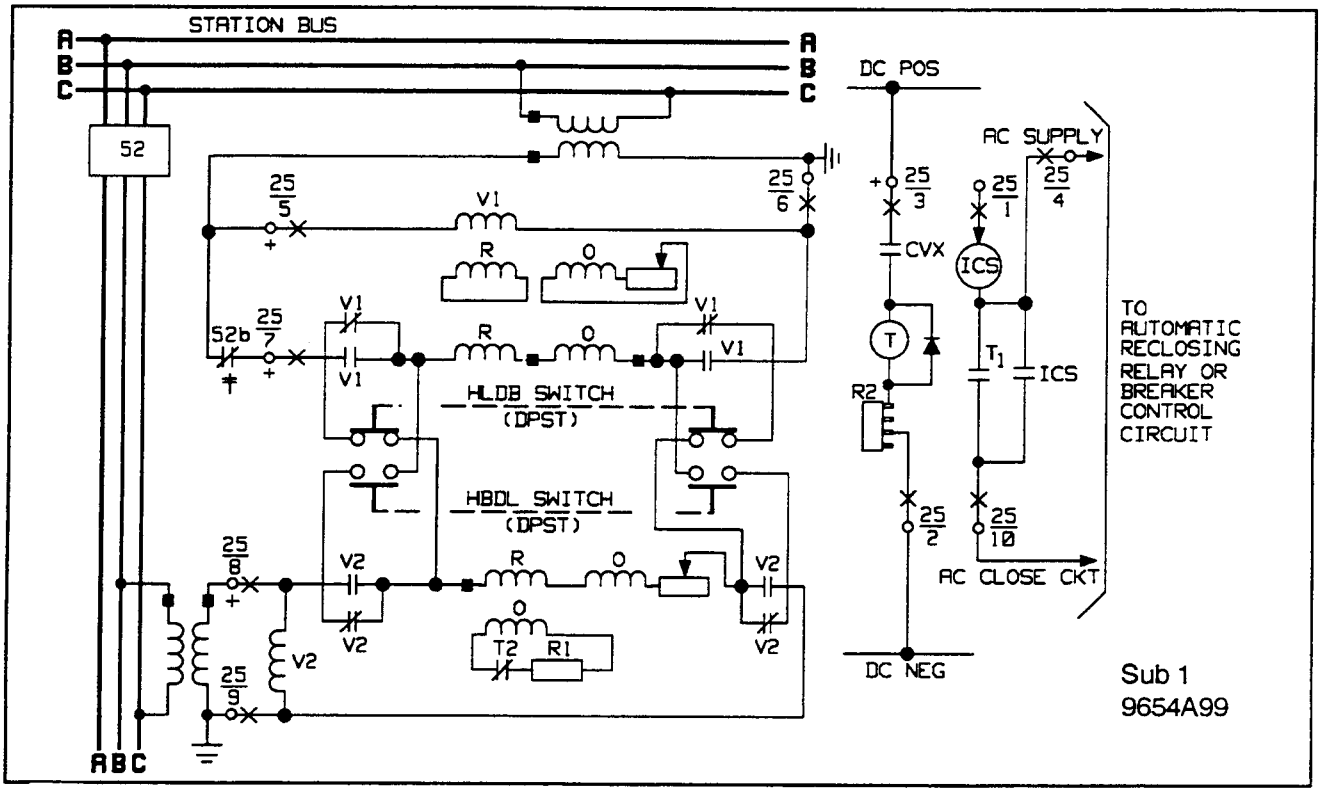

*** Figure 12.** External Schematic of the Type CVX-1 Synchro-Verifier with Isolated Potential Circuits for AC Breaker Close Circuit. Hot Line-Hot bus Reclosing and Selectable Hot Bus-Dead Line, Hot Line-Dead Bus Reclosing.

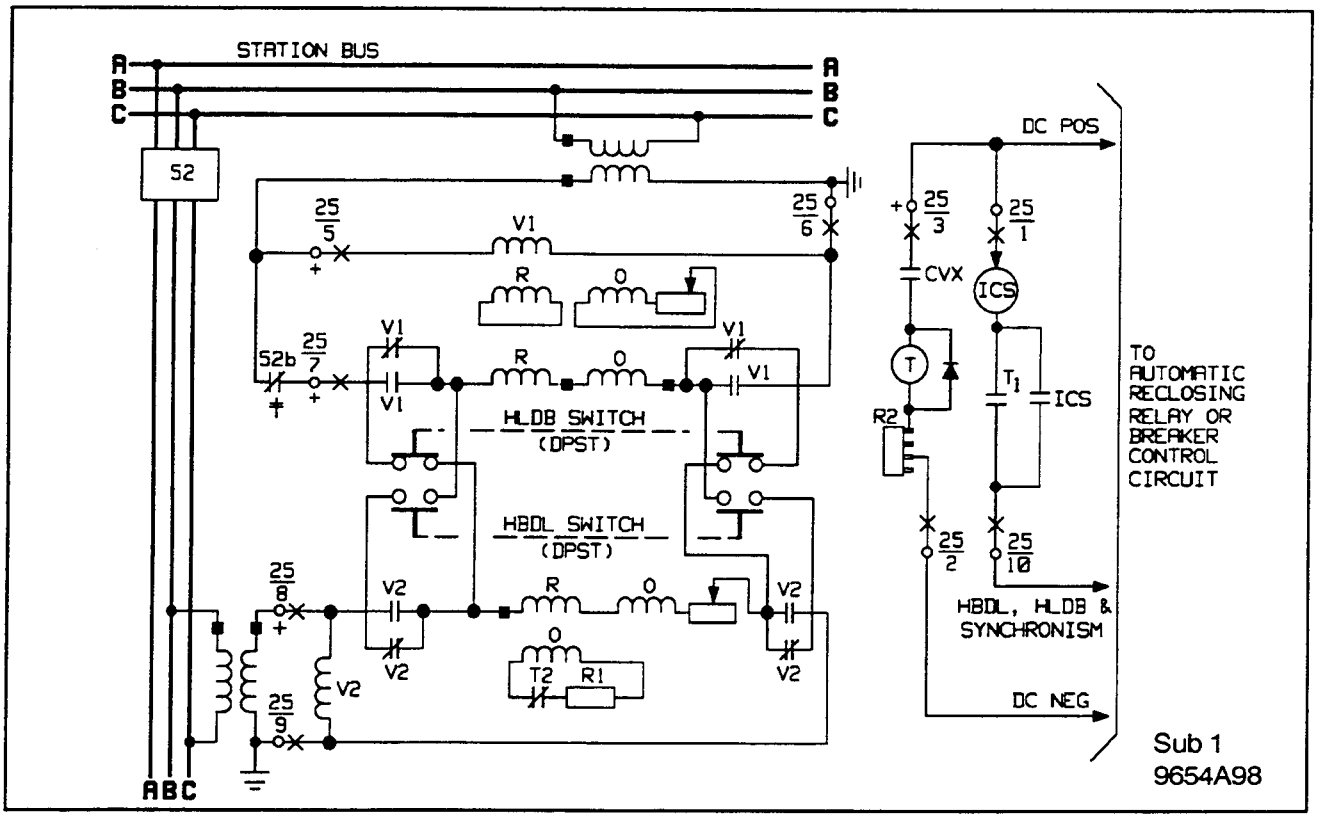

*** Figure 13.** External Schematic of the Type CVX-1 Synchro-Verifier with Isolated Potential Circuits for DC Breaker Close Circuit. Hot Line-Hot Bus Reclosing and Selectable Hot Bus-Dead Line, Hot Line-Dead Bus Reclosing.

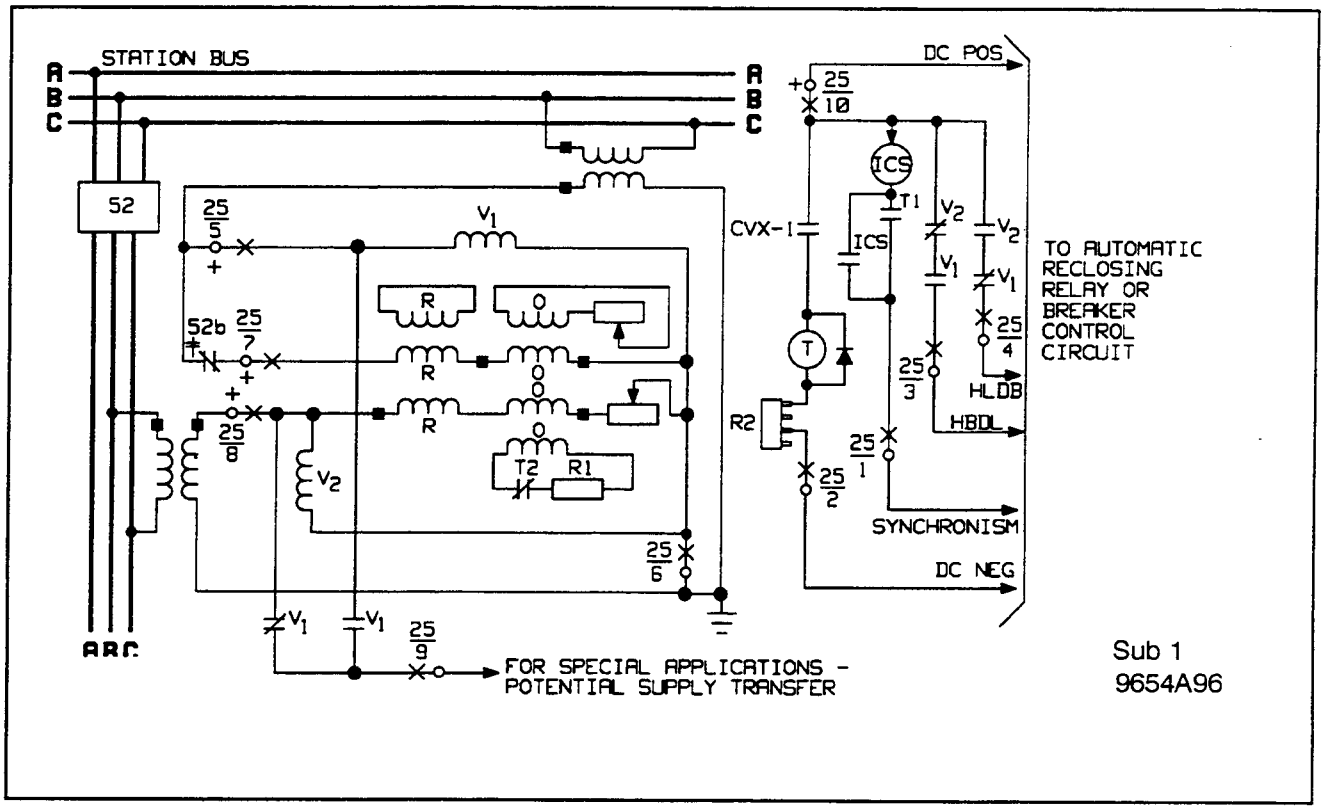

*** Figure 14.** External Schematic of the Type CVX-1 Synchro-Verifier with Common Potential Circuits. Hot Line-Hot Bus, Hot Line-Dead Bus, and Hot Bus-Dead Line Reclosing.

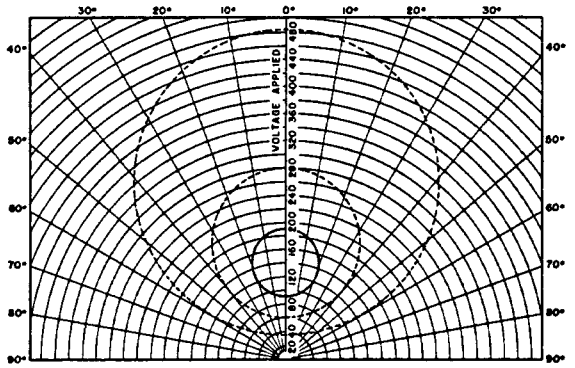

Sub 7
184A997

Figure 15. Typical Voltage Angle Characteristics of CVX, CVX-1 for Various Closing Angle Settings. Rated Voltage on One Circuit.

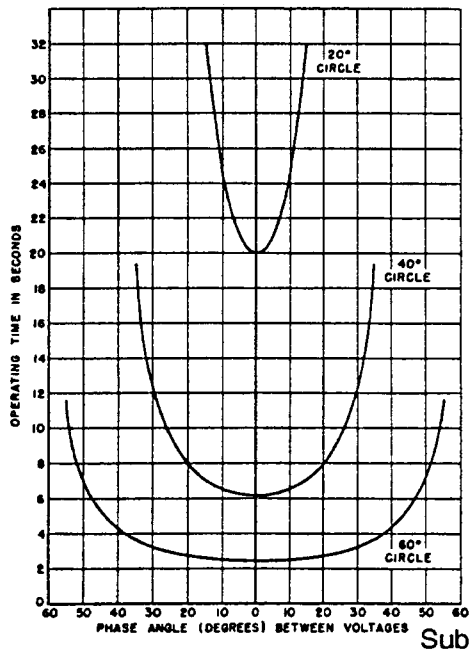

Sub 1
184A998

Figure 16. Typical Time Phase Angle Curves of CVX, CVX-1. Rated Voltage on Both Circuits No. 11 Dial Time Settings.

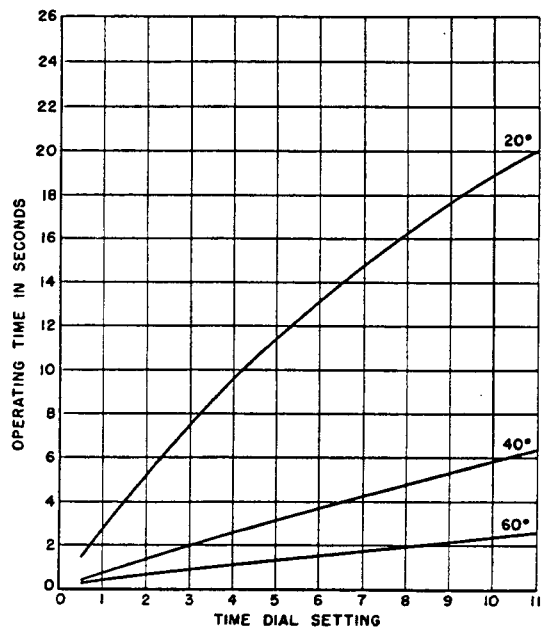

Sub 2
184A999

Figure 17. Operating Time Variations With Changes in Time-dial Settings. Rated In-Phase Voltage on Both Circuits, 20, 40 and 60 Circle.

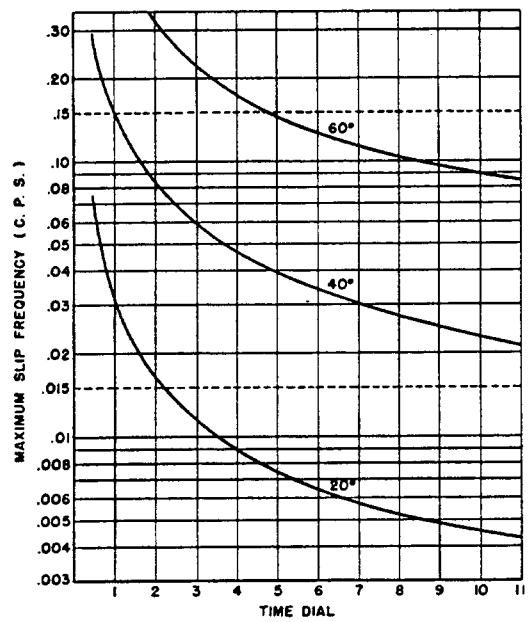

Sub 1
185A123

Figure 18. Approximate Maximum Slip Frequency for Which Operation Occurs - Rated Both Sides.

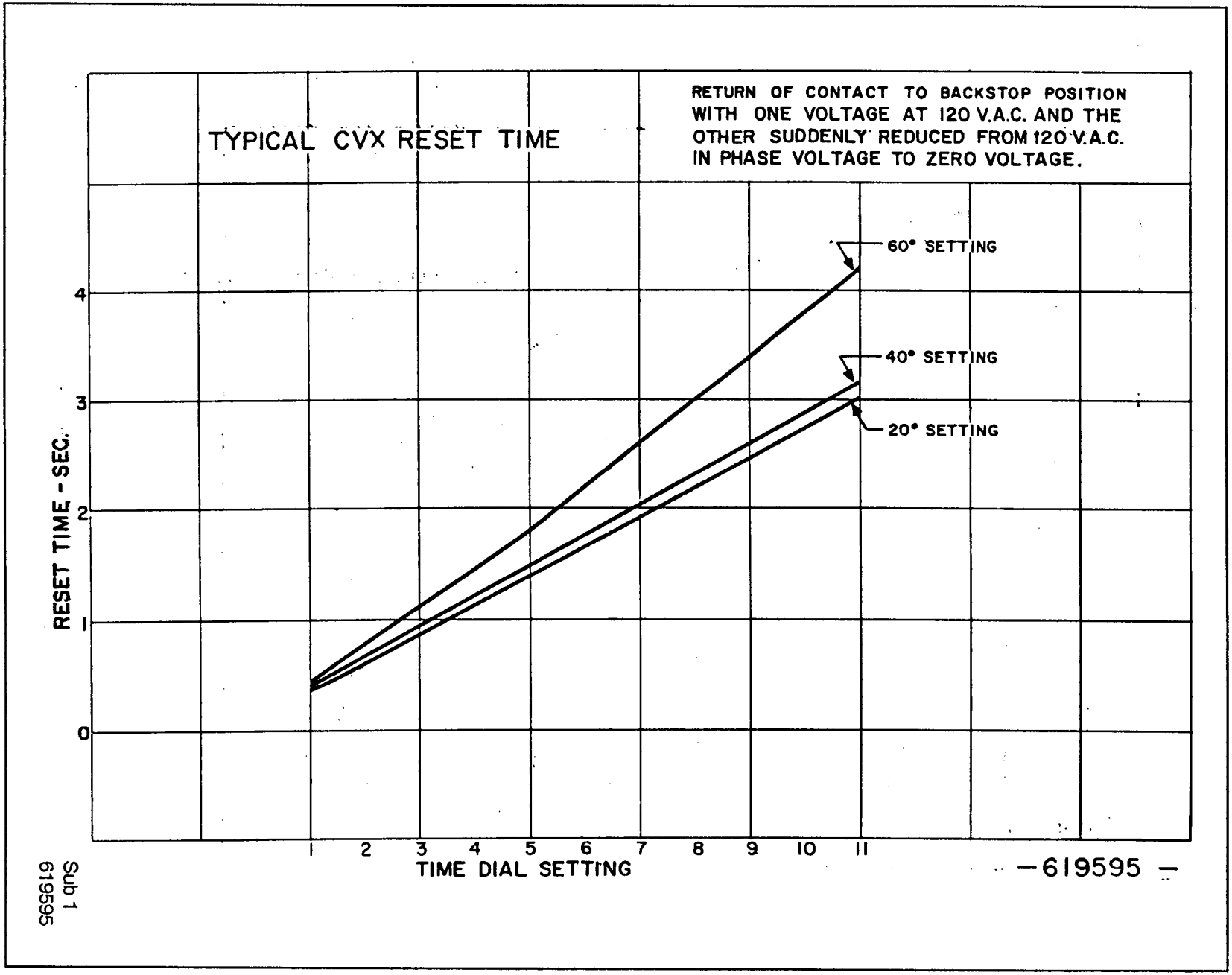

Figure 19. Typical CVX, CVX-1 Reset Times. Return of Contact to Backstop Position with One Voltage at Rated Voltage and the Other Suddenly Reduced from Rated in Phase Voltage to Zero Voltage.

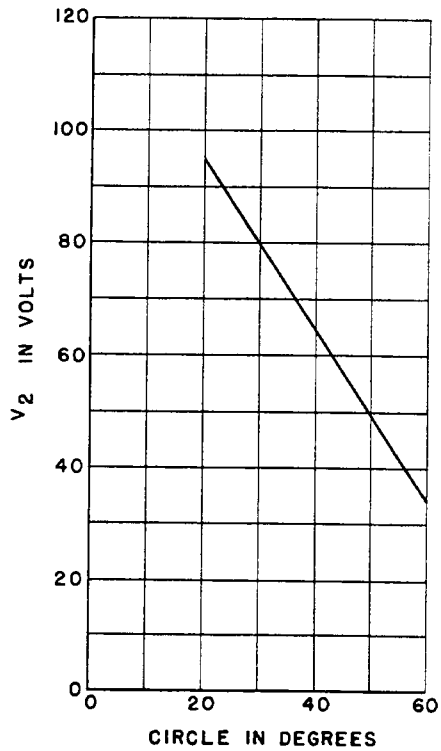

Figure 20. V_1 Voltage for Different Operating Circle, V_2 Equal to Rated Voltage at Zero Phase Angle.

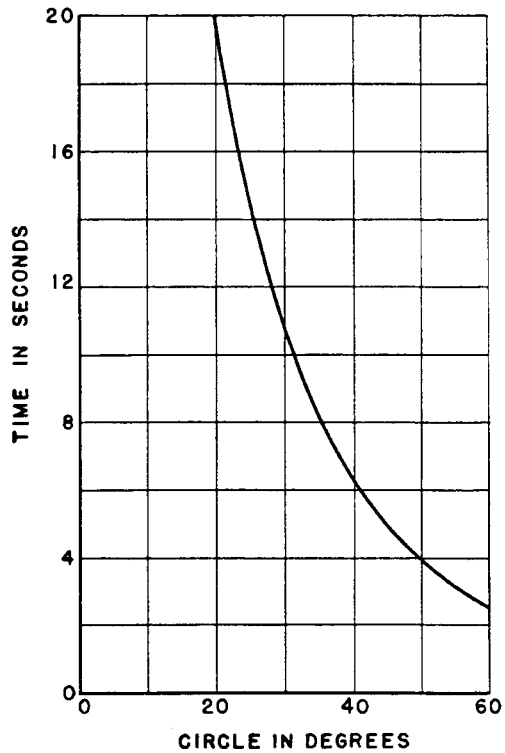

Figure 21. Operating Times from the No. 11 Time Dial Position for the Type CVX. CVX-1 Relay Set for Different Operating Circles. V1 & V2 Equal to Rated Voltage at Zero Phase Angle.

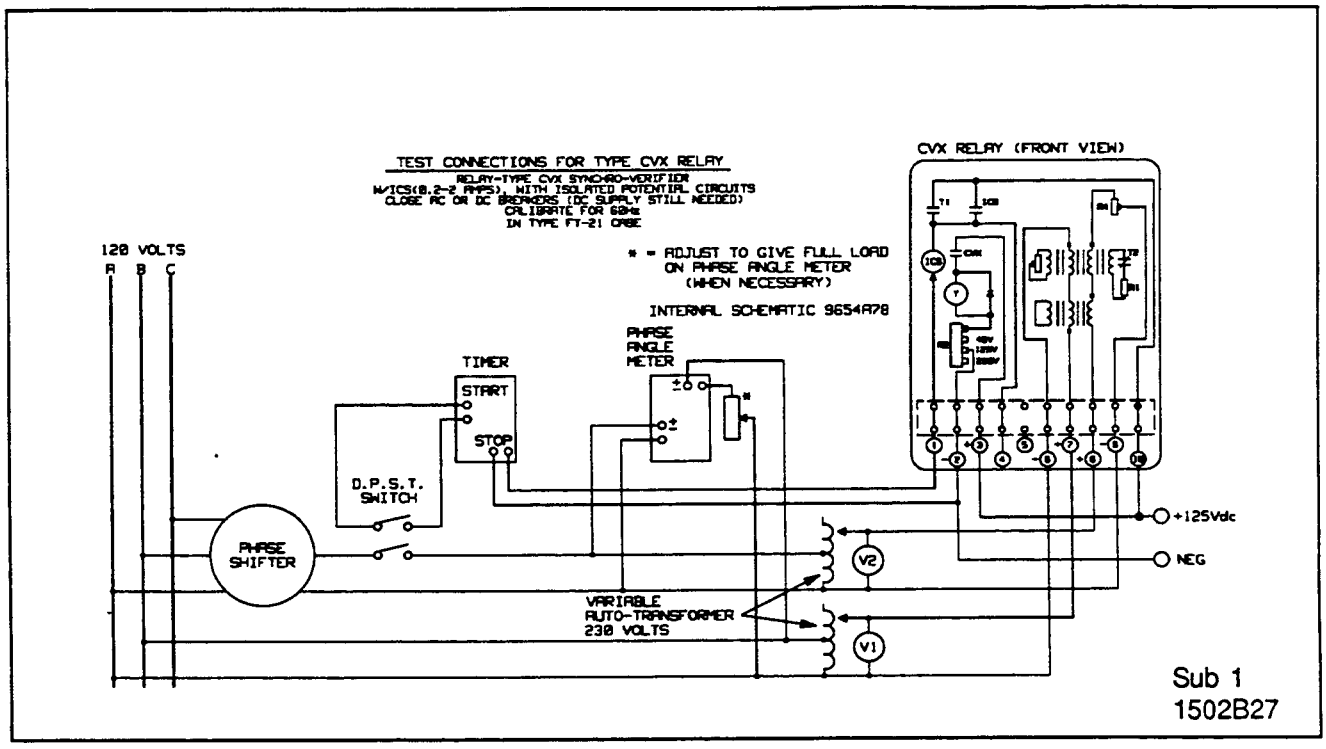

Figure 22. Relay-Type CVX Synchro-Verifier W/ICS (0.2-2 Amps), with Isolated Potential Circuits Close AC or DC Breakers (DC supply still needed) Calibrate for 60Hz in Type FT-21 Case.

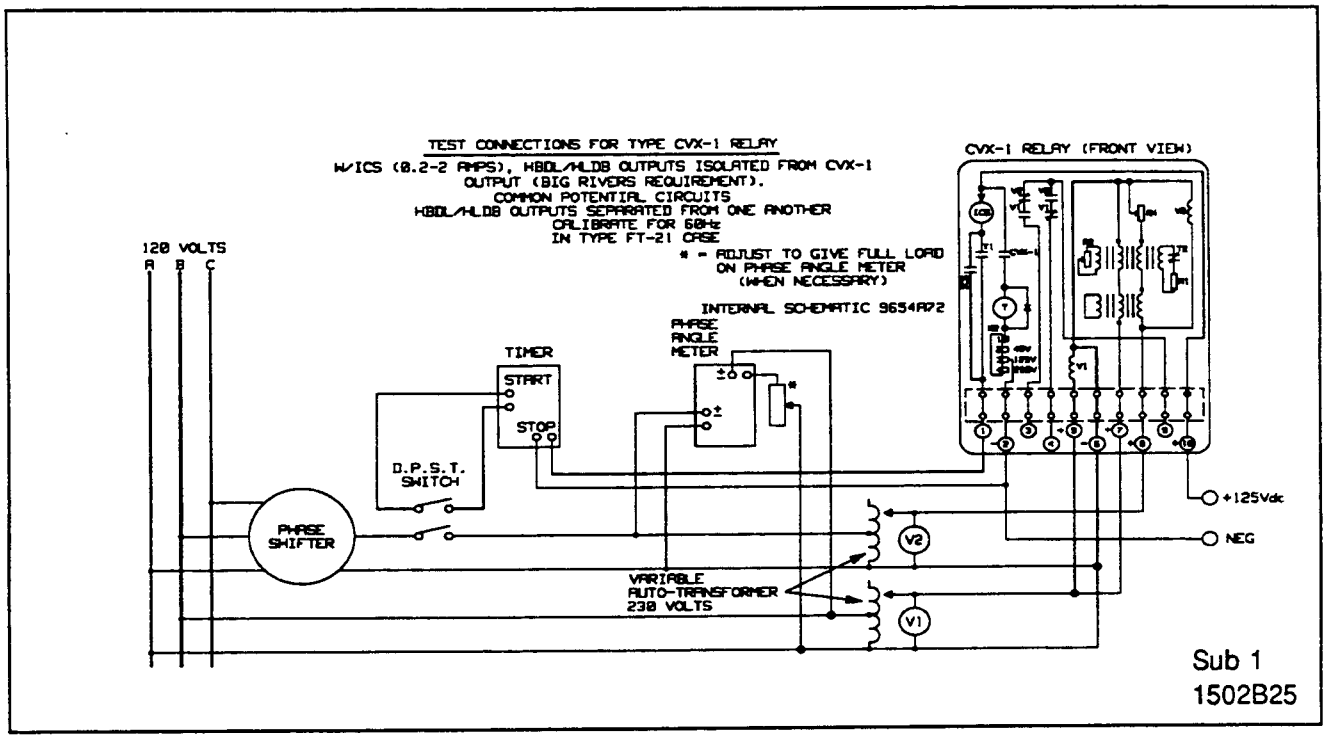

Figure 23. Relay-Type CVX-1 Synchro-Verifier W/ICS (0.2-2 Amps), HBDL/HLDB Outputs Isolated from CVX-1 Output (Big Rivers Requirement). Common Potential Circuits HBDL/HLDB Outputs Separated from one another Calibrate for 60Hz in Type FT-21 Case.

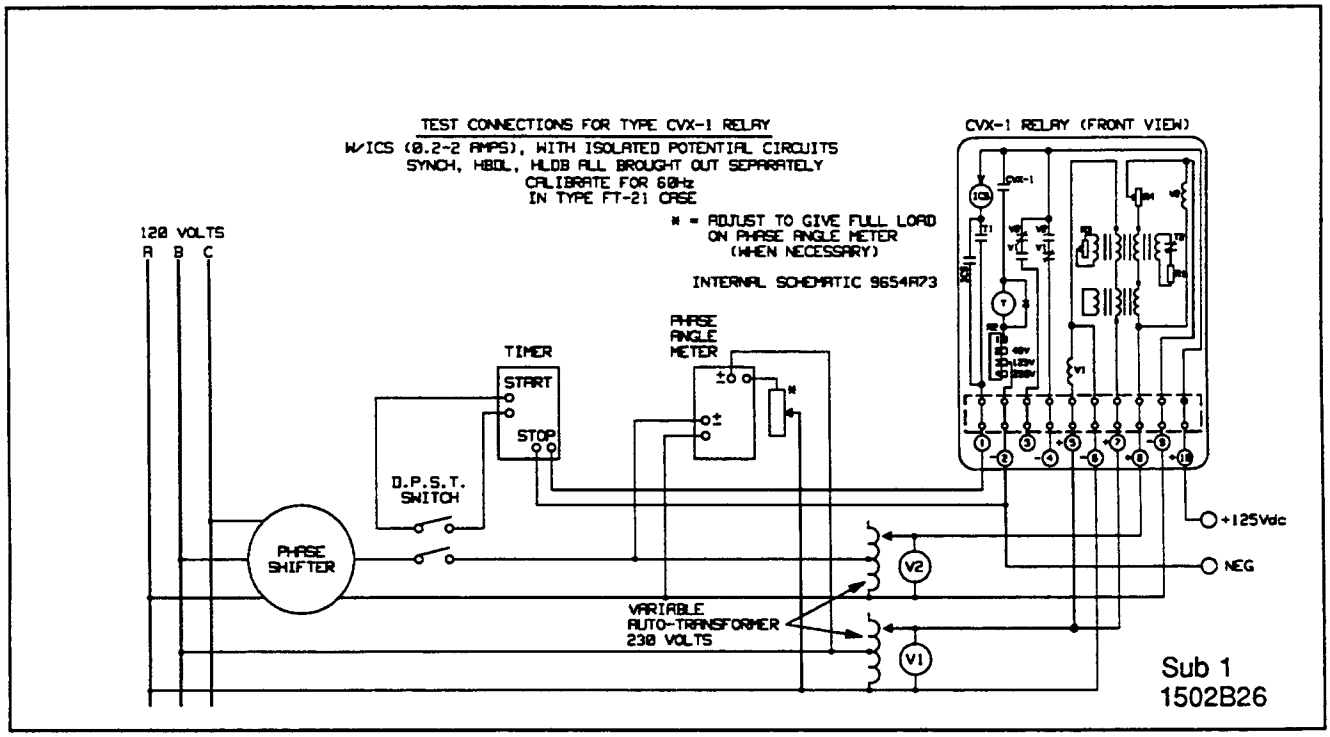

Figure 24. Relay-Type CVX-1 Synchro-Verifier W/ISC (0.2-2 Amps), with Isolated Potential Circuits Synch, HBDL, HLDB All Brought Out Separately Calibrate for 60Hz in Type FT-21 Case.

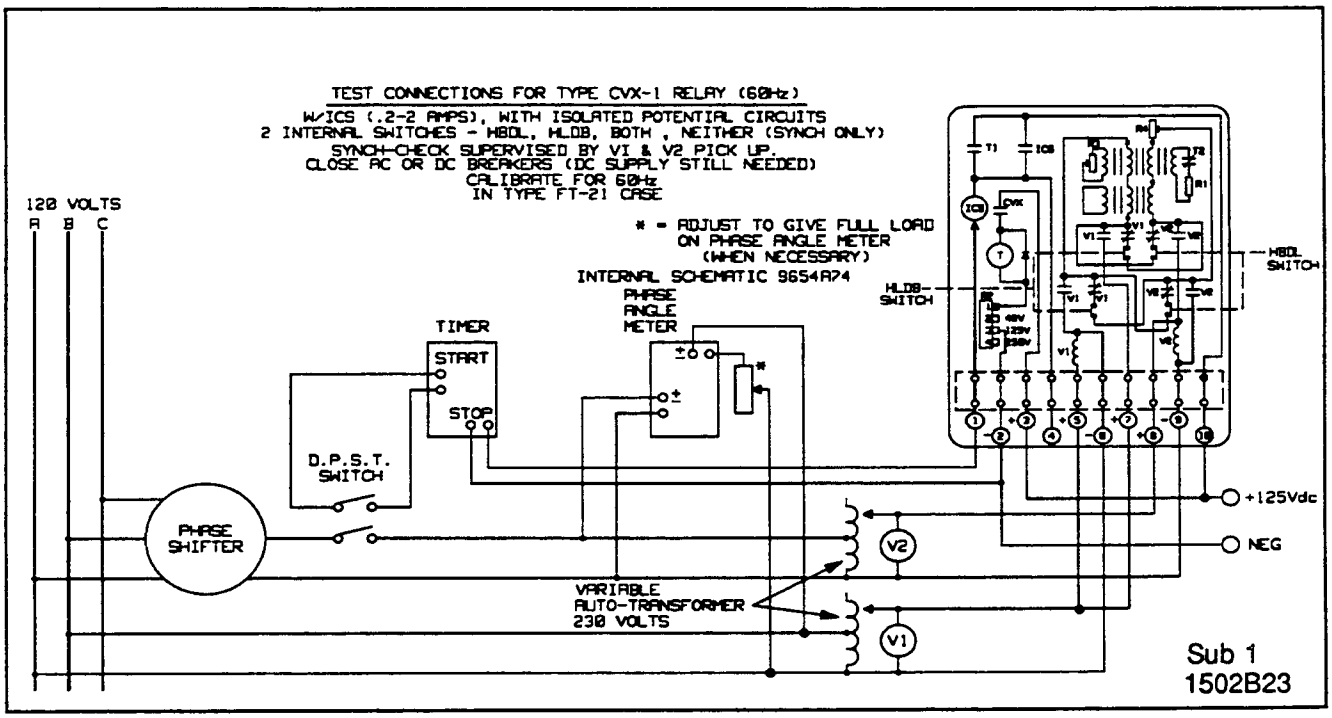

* **Figure 25.** Relay-Type CVX-1 synchro-Verifier W/ICS (.2-2 Amps), with Isolated Potential Circuits 2 Internal Switches - HBDL, HLDB, Both, Neither (Synch. Only) Synch-Check supervised by V1 & V2 Pick up. Close AC or DC Breakers (DC supply still needed) Calibrate for 60Hz in Type FT-21 Case.

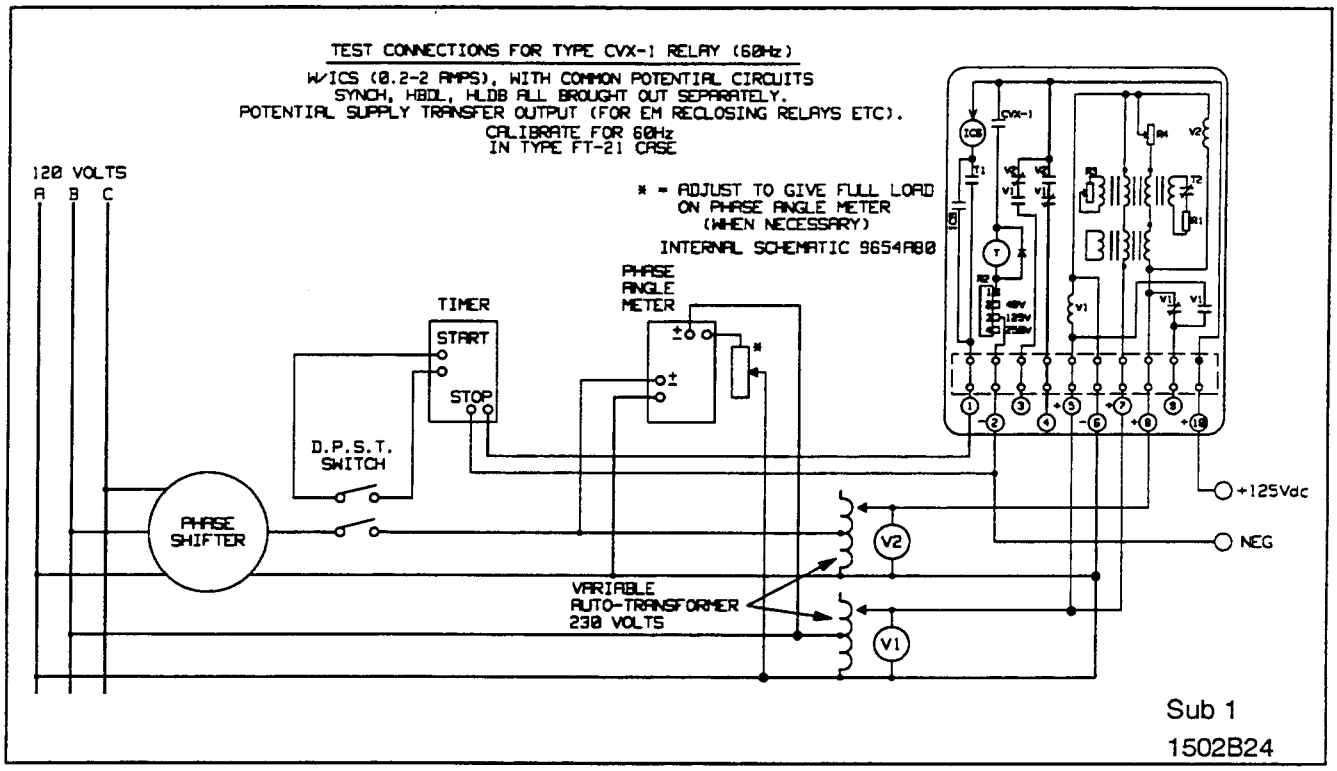

Figure 26. Relay-Type CVX-1 Synchro-Verifier W/ICS (0.2-2 Amps), with Common Potential Circuits Synch, HBDL, HLDB All Brought Out Separately. Potential Supply Transfer Output (For EM Reclosing Relays Etc.) Calibrate for 60Hz in Type FT-21 Case.

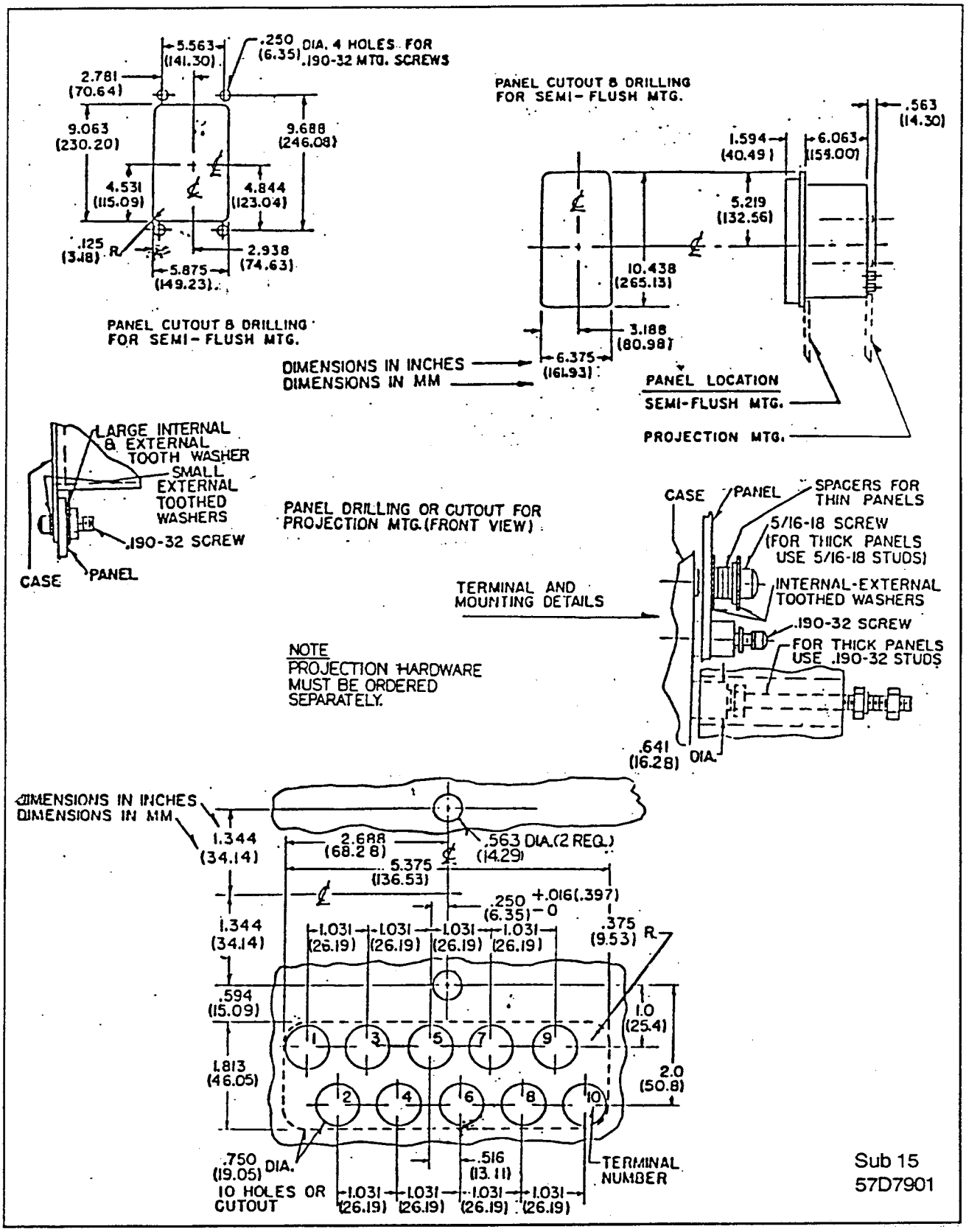

ABB Network Partner Figure 27. Outline & Drilling Drawing

ABB Power T&D Company Inc.
4300 Coral Ridge Drive
Coral Springs Florida 33065
(954) 752-6700
FAX: (954) 345-5329

Printed in U.S.A.