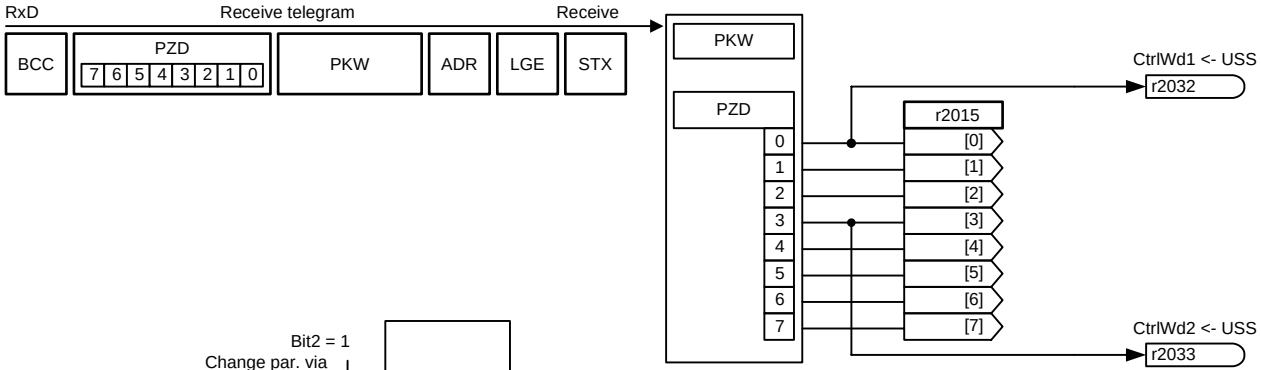

Bit00 ON/OFF1
Bit01 OFF2: Electrical stop
Bit02 OFF3: Fast stop
Bit03 Pulse enable
Bit04 RFG enable
Bit05 RFG start
Bit06 Setpoint enable
Bit07 Fault acknowledge
Bit08 JOG right
Bit09 JOG left
Bit10 Control from PLC
Bit11 Reverse (setpoint inversion)
Bit12 -
Bit13 -
Bit14 -
Bit15 CDS Bit 0 (Local/Remote)

Bit04 Drive data set (DDS) Bit 0
Bit05 Drive data set (DDS) Bit 1
Bit11 Enable droop
Bit12 Torque control
Bit13 External fault 1
Bit15 Command data set (CDS) Bit 1

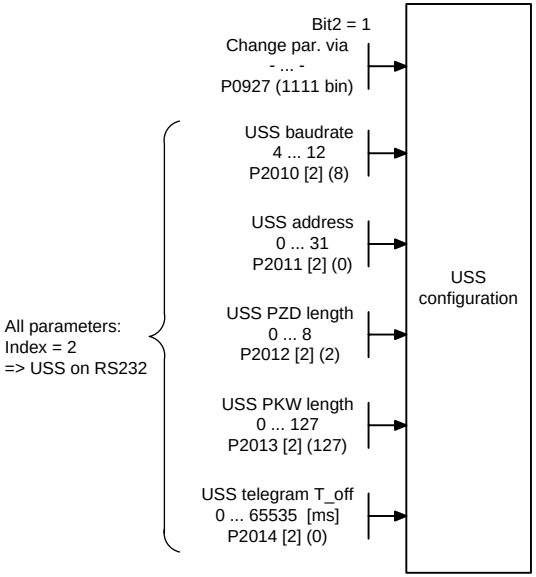

Note:
Bit 10 must be set in the first PZD word of the telegram received via USS so that the converter will accept the process data as being valid. For this reason, the control word 1 must be transferred to the converter in the first PZD word.