ALLIS-CHALMERS MANUFACTURING COMPANY

INDEX FOR
MAGNETIC BREAKER AND AUXILIARY EQUIPMENT

CONTENTS	PARAGRAPH NO.
GENERAL	1-4
INSPECTION	5
RECEIPT	6
STORAGE	7
HANDLING	8
INSTALLATION	9
DESCRIPTION	
GENERAL	11-12
CONTACTS	13
ARC-CHUTE ASSEMBLY	14
PHASE BARRIERS	15
BREAKER MECHANISM	16
SOLENOID OPERATOR	17
AUXILIARY EQUIPMENT	18
METHOD OF ARC INTERRUPTION	19
CLOSING	20-21
OPENING	22-23
GENERAL	24-25
CONTACT ALIGNMENT	26
OPENING SPRINGS	27
STROKE OF MAIN CONTACT	28
CONTACT ADJUSTMENT	29
CONTACT PRESSURE OF INSULATING SWITCH CONTACT BLADES	30
TOGGLE SETTING	31
OPERATOR MECHANISM MAIN LATCH AND PROP LATCH	32
AUXILIARY SWITCH	33
LIMIT SWITCH	34
LATCH CHECK SWITCH	35
INTERLOCK CRANK	36
TRIPPING UNIT	37
FINAL INSTALLING INSPECTION	
APPROVED ARRANGEMENT DRAWING	38
LUBRICATION AND OPERATION	39
WIRING	40
CUBICLE	41
GROUNDING CONTACTS	42
PRIMARY AND SECONDARY CONTACTS, ENGAGEMENT	43
MECHANICAL INTERLOCKS	44
TEST POSITION, OPERATION IN	45
FASTENINGS	46
MAINTENANCE	
GENERAL	47
CONTACTS	48
BARRIER STACKS	49
BREAKER TIMING	50
LUBRICATION	51

JUN 5 1998

ALLIS-CHALMERS MANUFACTURING COMPANY

Index (Cont'd)

CONTENTS

	PARAGRAPH NO.
REPLACEMENT PARTS	
HOW TO ORDER	52-54
INSTALLATION OF REPLACEMENT PARTS	
GENERAL	55
PHASE BARRIERS	56
ARC-CHUTE ASSEMBLY	57
BARRIER STACK	58
ARC RUNNERS AND BLOW-OUT COILS (FRONT AND REAR)	59
FLASH PLATES	60
ARCING CONTACTS	61
MAIN CURRENT CARRYING CONTACTS	62
DISCONNECT CONTACT ARMS	63
MAGNETIC BLOWOUT PLATES	64
BUSHING ALIGNMENT	65-67
BUSHING STUD REMOVAL	68

ALLIS-CHALMERS MANUFACTURING COMPANY

ILLUSTRATIONS FOR
MAGNETIC BREAKER AND AUXILIARY EQUIPMENT

FIG. NO.	DESCRIPTION
1	MAGNETIC BREAKER ASSEMBLY
2	TYPICAL BASE AND OPERATOR ASSEMBLY
3	TOP FRAME ASSEMBLY
4	TYPICAL OPERATOR ASSEMBLY
5	TYPICAL AUXILIARY SWITCH
6	TOP BUSHING ASSEMBLY
7	LOWER BUSHING ASSEMBLY
8	TYPICAL ARC-CHUTE
9	SHUNT TRIP ASSEMBLY
10	PUFFER AND ACCELERATING SPRING
11	TYPICAL LIMIT SWITCH
12	TYPICAL LATCH CHECK SWITCH
13, 14, 15	TYPICAL OPERATOR LINKAGE DIAGRAM

INSTRUCTIONS
FOR THE INSTALLATION AND OPERATION
OF
ALLIS-CHALMERS RUPTAIR
MAGNETIC BREAKER AND
AUXILIARY EQUIPMENT

GENERAL

PROPER CARE IS ESSENTIAL TO GOOD SERVICE

1. The Allis-Chalmers Ruptair Magnetic Breaker is an integral unit consisting of a power circuit breaker complete with relays, auxiliary switches and equipment necessary for its operation and control. When supplied with primary and secondary disconnecting contacts, it becomes the complete movable portion for Allis-Chalmers switchgear and is usually referred to as the "Movable Portion".

2. The successful operation of this unit depends on proper installation and maintenance, as well as proper design and manufacture.

3. The information and instructions included in this book are to aid you in installing and maintaining these units so that you will obtain the highly satisfactory service of which they are capable.

4. Please pass this information along to your engineers and erection and servicemen who will then be better able to aid you in realizing the best service from this equipment.

INSPECTION

5. Before leaving the factory, each movable portion has been carefully inspected and packed by workmen experienced in the proper handling of electrical equipment.

RECEIPT

6. Upon receipt of the movable portion remove all packing traces and examine the breaker and auxiliary equipment carefully to see that no damage has occurred during transit. If any injury is disclosed, a claim for damages should be filed at once with the transportation company and the Allis-Chalmers Manufacturing Company notified.

STORAGE

7. If the movable portion cannot be set up immediately in its permanent location, and it is necessary to store the equipment, it should be kept in a clean dry place and protected from dust, the action of corrosive gases, from coal combustion products, etc., and from mechanical injury.

HANDLING

8. In removing the breaker from its crate and handling same with a crane or hoist, a spreader should be used to prevent distortion of frame members. Avoid short hitches which could place strain on and damage insulating parts, fittings, arc chutes, etc.

INSTALLATION

9. The Allis-Chalmers Ruptair circuit breaker is designed such that it is particularly suitable for application within a fixed portion or metal clad switchgear cubicle. Before installing a breaker in a cubical, the cubicle should be cleaned of all dirt and foreign material. Insulation should be wiped clean and checked for dielectric strength before energization. The breaker insertion mechanism should be lubricated and checked for proper operation with care being taken to prevent jamming of the gear at the extremities of its stroke.

10. The movable portion should be inspected thoroughly to see that packing braces used to hold moving parts during shipment are removed.

CAUTION: BREAKER IS SHIPPED LOCKED IN CLOSED POSITION AND WITH BARRIER STACKS ITEM (8-254) BLOWOUT SIDE PLATES (1-294), AND UPPER ARC CHUTE SECTIONS (1-255) PACKED IN SEPARATE SHIPPING CONTAINERS. THESE ITEMS MUST BE INSTALLED BEFORE BREAKER IS ENERGIZED.

To remove breaker locking means, cut the wire which is wrapped around the latch (4-141). To install barrier stacks, (8-254) merely place in position, and replace upper arc chute assembly (1-255). Barrier stacks must be handled with care to avoid damaging the ceramic plates. Blowout side plates (1-294) are installed by placing them in notches in supports (1-52). Refer to Fig. 1.

The breaker insulating surfaces, and bushings must be dry and clean, adjustments checked, fastenings made secure if necessary, moving parts properly lubricated and breaker operation tried. When installing the movable portion in cubicle

for the first time make sure that the guide wheels on breaker frame engage properly with the mating parts on cubicle. As breaker is then moved into position, check to see that the grounding contacts under breaker make properly with the stationary contacts in cubicle, and that primary and secondary contacts are in alignment for proper contact engagement.

DESCRIPTION

GENERAL

11. The Allis-Chalmers Ruptair movable portion shown in Fig. 1 consists of magnetic circuit breaker for metal-clad switchgear application, with auxiliary equipment suitably arranged for best function and easy installation. As part of standard equipment, each order is furnished with one combination maintenance operating device and transfer handle. THIS DEVICE IS NOT SUITABLE FOR ACTUATING THE BREAKER ON AN ENERGIZED CIRCUIT.

12. The Ruptair magnetic circuit breaker differs essentially from oil breakers and air-blast breakers in that it does not depend on any stored medium such as oil or compressed air for interruption. Referring to Figure 1, the component parts of the breaker are mounted in a structural steel frame. The operator, the operating shaft and connecting links are mounted on the lower section of breaker frame and are well shielded. The horizontal terminal studs, which are insulated with shielded bakelite tubing, extend through the breaker frame and support the other parts of the electrical circuit. Interruption occurs within the arc chute assemblies which are mounted at the top over the contact structures.

CONTACTS (Figs. 3 & 6)

13. The stationary contact structure of each phase is made up of two sets of contacts, namely; main current carrying, and arcing, which are mounted on the upper bushing terminal. The movable contacts are attached to contact arms that pivot from the end of the lower bushing stud. Transfer areas of current carrying contacts are silver plated, and arcing contact surfaces are of a silver-tungsten alloy. The main current carrying contacts and arcing contacts are finger type. All contacts are backed by steel springs giving positive contact pressure when engages.

ARC-CHUTE ASSEMBLY (Fig.8)

14. Each arc-chute assembly consists of a two section tube of arc resistant material which provides phase isolation for interruption, and venting of the by-product gases of interruption. The lower half of the arc-chute contains:

(1) The blowout coils, front (8-292) and rear (8-276) which are locked in place by their cores (8-293) fitting into holes in the flash plate supports (8-266).

(2) The front and rear arc runners (8-272) which are connected to the blowout coils and fastened to the ends of the tube for support.

(3) The flash plate supports and refractory flash plates (8-289) are mounted on the inside and on each side of the tube in the area of arcing.

Resting on the flash plate supports (8-266) is an arc chute barrier stack (8-254) bounded at either end by the head and tail arc runners and blow out coils. The barrier stack is made up of a number of refractory plates having "Vee-Shaped" slots of varying height arranged in spaced relation and cemented into a unit. The barrier stack is mounted with slots facing downward such as to expose the "Vee" sections to the arcing area, with the top end being vented. The refractory composition is essentially non-gas forming and is highly resistant to heat shock. Also resting atop the bottom section of the arc chute tube and encasing the barrier stack and arc runners is the top section of the arc-chute tube. The arc-chute assembly is easily removable, thus making contact parts readily accessable for inspection.

PHASE BARRIERS

15. Full size barriers (1-250) of high dielectric material isolate each phase and are arranged for easy removal.

BREAKER MECHANISM

16. The breaker mechanism consists essentially of movable contact arms and insulating links which connect the contact arms to the operator mechanism.

SOLENOID OPERATOR (Fig.4)

17. The breaker is equipped with a solenoid operator which is an integral part of the breaker unit. It is mounted in the lower section of breaker and is contained within the breaker frame. The operator is furnished with a mechanically trip-free mechanism consisting of a toggle linkage so designed as to provide quick and positive tripping at any position of the closing

stroke. The mechanism is of low inertia, capable of quick acceleration and is equipped with a low energy trip device and opening coil, designed to provide high speed release of the trip mechanism upon energization of the trip coil.

AUXILIARY EQUIPMENT (Fig. 1)

18. The auxiliary equipment consists of a secondary transfer device, control relay, and closing rectifier as required. These are mounted on the lower portion of the breaker. The secondary transfer device houses the auxiliary switch, which is wired to the finger contacts such that when movable portion is moved into operating position in the cubicle the finger contacts engage the stationary contacts to complete the control circuit for operation of the breaker.

METHOD OF ARC INTERRUPTION

19. The Ruptair magnetic circuit breaker does not depend on any prestored medium, such as oil or compressed air, for arc interruption. Interruption is accomplished in air at atmospheric pressure, with the aid of a self induced magnetic blowout field and air draft. At the time the trip coil is energized, current is being carried through the main contacts. As the movable contact blade separates from the main contact, the current is transferred to the arcing contact to protect the main current carrying surfaces. As the arcing contacts part a power arc is drawn which is transferred first to the head and then the tail arc runners as the moving contact passes close to them on its opening stroke. The tranferral of the arc to the arc runners establishes the full flow of current through the blowout coils, setting up the magnetic field, which in accompaniment with natural thermal effects of the heated arc, configuration of the current carrying circuit, etc., tend to force the arc upward into the barrier stack. The cool surfaces of the barrier stack tend to cool and deionize the arc while the "Vee" slots in the stack reduce its cross section and elongate it. The arc runners are made of wide, heavy material for maximum heat dissipation and help to minimize metal vaporization. To facilitate interruption of low currents, a puffer assembly (Fig. 10) provides a movement of air through the contact area to aid the magnetic field in moving the arc into the barrier stack. All of the above effects work together to increase the resistance of the arc and enable it to be extinguished at an early current zero.

CLOSING - (Fig. 13)

20. Figure 13 shows the mechanism of the operator in the open position. Points "B", "F", "G", and "H" are fixed centers about which crank arms (2) and (3), link (6), trip latch (9), and prop latch (10) rotate respectively. Center "E" is a temporarily fixed center, being restrained by stop (11) and latch (9) as long as latch (9) is in position.

21. The closing force is applied at the toggle roll (D) by means of armature (12). The toggle linkage (4) and (5) moves towards the on center or in line position, thus rotating crank arms (2) and (3) counter clockwise about center "B". Movement of crank arm (2) closes the breaker and compresses the breaker opening springs (7). When links (4) and (5) reach their final position, prop latch (10) drops behind center "D" to lock the mechanism in the closed position as shown in Fig. 14. After closing the breaker, armature (12) returns to its normal position. Manual closing is as described except that armature (12) is actuated manually through the manual closing device.

OPENING (FIG. 15)

22. Opening of the breaker is accomplished either manually or electrically. Manually, the breaker is tripped by pushing on the trip button which in turn causes trip pin (13) to move downward, thus rotating trip latch (9) in a clockwise direction. Temporarily fixed center "E" is thereby released, enabling link (6) to rotate clockwise about center "F". Since the restraining force on opening springs (7) is now released, they act to rapidly open the breaker contacts. Reset spring (8) then acts to return the mechanism to the normal open position shown in Fig. 13. Electrical tripping is as above except that trip pin (13) is actuated by trip coil (14).

23. The tripping action described above can take place at any time during a closing operation, either manual or electrical, and regardless of whether or not the armature is energized. Thus the mechanism is electrically and mechanically trip free in any position.

GENERAL

24. The breaker has been completely set up, adjusted and tested at the factory. However, adjustments or fastenings may be changed or become loosened during shipment, storage or installation and should be checked and corrected, if necessary, before breaker is operated electrically. Manual operation (use maintenance closing handle)of breaker should be used for preliminary operation to see that all parts are free and work smoothly. The bushings and other insulating parts should be clean and dry. All contact surfaces should be inspected to see that they are clean and smooth. (Do not dress silver surfaces). Removal of all phase barriers and removal of arc-chute assemblies gives access to breaker for checking adjustments.

CAUTION: NOTE THAT THE MAINTENANCE CLOSING HANDLE IS NOT SUITABLE FOR ACTUATING THE BREAKER ON ENERGIZED CIRCUIT.

25. The paragraphs immediately following give the proper adjustments and methods of making same on the Allis-Chalmers Ruptair Air Magnetic Power Circuit Breaker.

CONTACT ALIGNMENT

26. The contacts are an integral part of the bushing assemblies and are carefully aligned with the upper and lower bushings before shipment and no further adjustment should be necessary. All that is required for proper contact alignment is that the moving contact operate in a plane relatively parallel to the fixed stationary contacts and that all the stationary fingers are engaged.

OPENING SPRINGS (Fig. 10)

27. The Opening Springs (10-39) (10-41) are fixed in adjustment such that with the breaker in the fully closed position the springs will be compressed to a length which will provide an opening velocity of 14-17 feet per second in the first three inches of movement, measured at the radius of the arcing contact "make" point. Changes in adjustment are not necessary and no provision is made for changing spring reaction.

STROKE OF MAIN CONTACT (Fig. 1 & 7)

28. The stroke of the main contact (3-53) is controlled through adjustment of operating arm (1-244). Proper adjustment is obtained when, with the breaker closed, the arcing contact (7-113) bumper service is not binding tightly on the bumper (6-84) and the main contacts (7-115-118) has the maximum possible positive wiping action on the main contact fingers (6-91). Note that the main contacts engage in a "heel and toe" action, first touching at the bottom and then coming to final position at the top, while the bottom initial contact points separate. The described adjustment will provide a separation of the initial contact points of at least 1/64", usually more, up to approximately 3/64". Adjustment is obtained by removing pin (1-253) loosening checknut and adjusting the length of connecting rod by screwing the rod end in or out until the closing of the breaker, the above conditions of adjustment exist on all three phases. After proper adjustment make sure that the checknut is made up tight and that cotter pins are properly spread.

CONTACT ADJUSTMENT (Figs. 6 & 7)

29. The contacts are carefully adjusted before shipment and no further adjustments should be necessary. However, it would be well to check the adjustment of the arcing and main contacts before installation and periodically thereafter to insure continuous good service. The arcing and main contacts are adjusted as follows: With the stroke set per Par. 28 adjust the stationary arcing contacts (6-79) so that it engages the moving arcing contact (7-113) at the point in the stroke where there is 1/4" plus .000" minus 1/16" air gap between the main contact fingers (6-91) and the moving contact (7-115-118). In general, this gap (arcing contact lead) will decrease slightly with successive adjustments as the arcing contacts wear in service and should not be permitted to become less than 3/16". The adjustment should be made individually on each phase, the 1/4" plus .000" minus 1/16" setting being obtained for

each phase by positioning with the maintenance closing device. Each arcing contact will then have approximately the same lead, but all will not necessarily make contact at exactly the same time. The arcing contacts should engage freely and not show any tendency to "stub" when making contact.

CONTACT PRESSURE OF INSULATING SWITCH CONTACT BLADES (Fig. 7)

30. The contact pressure of the isolating switch contact blades should be adjusted with reference to Figure 7. Proper adjustment is obtained when the hinge joint will require a pull of 6 to 10 pounds to move the contacts toward the open position. To measure the pounds pull, the disconnect (3-53) is detached from operating rod (1-244) by removing pin (1-243) and moved to a position just short of contact make. A spring scale attached at the arcing contact radius may be used to measure pull. The pull must be made approximately perpendicular to the contact. Adjustment is made by positioning the "Stover" locknut (7-104) on cap screw (7-109) until the pull registers 6 to 10 pounds. Where "Stover" locknuts have been "staked" in position they should be restaked after any change in adjustment to insure permanence of setting.

TOGGLE SETTING (Fig. 4)

31. With the breaker closed and armature (4-210) against pole head (4-207), the armature must push the toggle roll (4-230) to a point which will provide a clearance of 1/32" plus or minus 1/64" with the prop latch (4-198), but must not push the toggle roll solid against the kick-off arm (11-163). When the breaker is in the open position, the clearance between the toggle roll (4-230) and the armature cap (4-204) should be a minimum of 1/8".

OPERATOR MECHANISM MAIN LATCH AND PROP LATCH (Fig. 4)

32. The main operator latch (4-141) is in proper adjustment when the latch roll (4-229) engages it at a point 3/16" + 0 - 1/16" from the bottom edge of the latch face. Changes in adjustment are made by positioning stop screw (9-142). The latch roll stop screw (4-224) should be positioned such that the latch roll will have a clearance of 1/32" plus or minus 1/64" between the stop screw and the latch face. The prop latch (4-198) is normally adjusted such that it engages the toggle roll (4-230) at a point 1/8" + 1/16" - 0" from the bottom edge of the latch. Adjustment is made by using spacers (4-199). Latch adjustments, once properly made, are permanent in nature and will not normally require readjustment in service.

AUXILIARY SWITCH (Fig. 2 & 5)

33. The auxiliary switch, located on the lower right side of breaker has been adjusted at the factory and as normal installations should not require further adjustments, care should be

exercised in making any changes. However, before the breaker is placed in service a check should be made to see that the crank arm (5-14) throws approximately equal distances on either side of a horizontal centerline. The adjustment for throw of lever is made by positioning clevis (2-305) on connecting rod (2-300). After correct adjustment is made, make sure all fastenings and locknuts are secure. Each rotor (5-1) can be adjusted individually in steps of 22½ degrees merely by pressing the contact to one side against the spring and rotating it within its insulated rotor housing until it snaps into the desired position.

LIMIT SWITCH (Fig. 11)

34. The limit switch is located on the front of the operator frame and contains both the "a-a" and "b-b" stages of limit switch contacts. The switch has been adjusted correctly before leaving the factory. However, a check should be made to see that with the solenoid de-energized and actuating arm (11-163) against the stop in bracket (11-156), there is 1/32" to 1/16" overtravel of the limit switch plunger after "bb" contact make. Adjustments are made by use of spacer (11-160). With the breaker closed, the "aa" contacts will be closed, and no adjustment is necessary.

LATCH CHECK SWITCH (Fig. 12)

35. The latch check switch (12-175) is mounted on the right side of operator frame together with switch operating crank (12-171). Proper adjustment has been made prior to shipment. However, a check should be made to see that plunger on the latch check switch (12-175) has a clearance of 1/32" to 1/16" with operating arm (12-171). Adjustments are made by use of spacer (12-173).

INTERLOCK CRANK (Fig. 2)

36. The mechanical interlock (2-322) is located under the breaker base plate. It acts on the trip latch in such a manner that the breaker is rendered trip free between the test position and the fully inserted position. It is actuated by a cam mounted on the floor of the cubicle. The interlock is in proper adjustment when the roll (2-325) is positioned such that the breaker can trip within 5/16" movement from the fully inserted position. When the breaker is fully inserted, roll (2-325) should have a min. 1/16 clearance. Note that interlock rod (2-304) acts to prevent removal of the breaker if it is in the closed position.

TRIPPING UNIT (Fig. 9)

37. The shunt trip application as shown in Fig. 9 is factory set and should need no further adjustment. In proper adjustment, trip

pin (9-131) should float freely on its spring and not have any binds. The length of the trip pin should be such that slow manual actuation of the trip armature (9-131) will trip the breaker and have 1/32 to 1/16 aftertravel. There should also be a clearance of 1/16" min.between the trip pin and trip latch (9-141). Adjustments are made by use of spacer (9-143). Particular attention should be given this adjustment since latch stop screw (9-142) may be affected and will require compensation for spacer (9-143) added or removed.

FINAL INSTALLING INSPECTION

CHECK WITH APPROVED ARRANGEMENT DRAWING

38. Make sure that the Ruptair magnetic breaker is properly set up in accordance with the approved arrangement drawing.

LUBRICATION AND OPERATION

39. Check to see that the mechanism operates freely and that all moving parts have been properly lubricated. See Paragraph 51 for Methods and Use of Lubricant.

WIRING

40. Inspect all insulated wiring and check on all terminal connections. Test the wiring for possible grounds or short circuits.

CHECKING IN CUBICLE

41. Check to see that when installing the movable portion in the cubicle the engaging parts on breaker fit properly with mating parts of the cubicle. Try each movable portion in several cubicles to assure interchangeability.

GROUNDING CONTACTS

42. Check to see that the grounding contacts (2-314) under breaker make proper contact with stationary contact in cubicle as breaker is moved into position.

ENGAGEMENT OF PRIMARY AND SECONDARY CONTACTS

43. As the movable portion is moved into final position, check to see that the primary and secondary contacts are in alignment for proper contact engagement.

MECHANICAL INTERLOCKS

44. Check to see that the mechanical interlocks (2-322) and(2-304) operate freely and are free of binds and interference. Check by careful manual operation of breaker. Check to see if the breaker

can be easily inserted to its final position in cubicle. Check to see if breaker can be closed only in either its test position or in its final position.

OPERATION IN TEST POSITION

45. The breaker should be operated several times in the test position to see that all parts are working smoothly before it is placed in service.

FASTENINGS

46. Check to make sure that all fastenings are secure.

MAINTENANCE

GENERAL

47. Upon the proper operation of the circuit breaker depends the safety of the operators and the successful functioning of the connected apparatus, therefore, the breaker should have regular systematic, thorough, understanding inspection and maintenance. Be sure that the breaker and its mechanism is disconnected from all electric power and that the breaker is in the open position before any maintenance is attempted. Inspect the breaker and auxiliary equipment mechanically and electrically at least once every six months, or more often if service is particularly severe.

CONTACTS

48. Inspect all contacts frequently, depending on severity of service. Replace badly pitted or burned contacts before they are damaged to such an extent as to cause improper operation of the breaker.

BARRIER STACKS

49. The arc-chute barrier stacks are fragile and should be handled carefully. The barrier stacks (8-254) should be inspected for erosion of the plates in the areas of the slots. Stacks should be replaced when erosion progresses to a point such that the slots of the shortest plates have been extended to the lowest hole through the plate above the slot. They should be likewise replaced if plates are broken or cracked.

BREAKER TIMING

50. Check the contact adjustment and breaker timing occasionally, also check adjustments of auxiliary equipment and see that it functions properly. A comparison of breaker timing at any period of maintenance with that taken new will immediately indicate a condition of maladjustment or friction should the timing vary more than 1/2 cycle on opening or 2 cycles on closing with the same coils. A convenient place to attach the speed analyzer link may

be had by removing one screw (7-114) on the disconnect and replacing it by a suitable stud.

LUBRICATION

51. Lubrication is of the utmost importance and a special effort should be made to assure that all moving parts are kept clean and properly lubricated at all times. The disconnect hinge joint, stationary arcing and main contact sockets, and the solenoid armature are lubricated with microfine dry graphite. Graphite should be rubbed in well, and all excess carefully removed.

CAUTION: GRAPHITE MUST BE KEPT OFF INSULATION UNDER PENALTY OF REPLACEMENT, AS IT CANNOT BE SATISFACTORILY REMOVED. BEARING PINS AND OTHER MOVING PARTS SHOULD BE LIGHTLY LUBRICATED WITH A LIGHT FILM OF GARGOYLE A #0 OR EQUAL. NEEDLE BEARINGS WILL IN GENERAL NOT REQUIRE FREQUENT LUBRICATION, BUT CARE SHOULD BE TAKEN TO PREVENT ENTRANCE OF DIRT AND FOREIGN MATERIAL DURING MAINTENANCE WORK.

REPLACEMENT PARTS

HOW TO ORDER

52. When ordering replacement parts, refer to the illustration or to the recommended spare parts list attached to the instruction book. Specify quantity, reference numbers, and give description of parts required. Also, give type, amperage, voltage and serial number of breaker on which parts are to be used.

EXAMPLE: - 3 - arcing contact, reference (6-79), for use on type MC-500, 1200 amp., 13800 volts, Serial Number 291421, Ruptair Circuit Breaker.

53. A sketch of the part wanted will help materially if any uncertainty exists.

54. It is recommended that sufficient parts be carried in stock to enable operators of circuit breakers to replace without delay any worn, broken, or damaged parts. The attached spare parts list suggests a minimum quantity of spare parts which will be of most use.

INSTALLATION OF REPLACEMENT PARTS

GENERAL

55. Before removing any part, observe its function and adjustment. By so doing, it is usually possible to avoid any appreciable amount of adjustment work after the installation of the replacement part.

CAUTION: BEFORE REMOVING ANY PART, MAKE SURE THAT THE BREAKER AND ITS OPERATING MECHANISM IS DISCONNECTED FROM ALL ELECTRIC POWER AND THAT THIS BREAKER IS IN THE OPEN POSITION.

PHASE BARRIERS (Fig. 1)

56. The outside and inter-phase barriers (1-350) can be removed by simply withdrawing them from the top of the breaker. On replacement make sure that the barriers are fully inserted and set in their respective locating slots.

ARC-CHUTE ASSEMBLY (Fig. 8)

57. When removing an arc-chute assembly, remove the phase barriers adjacent to that particular phase, lift off top section of arc-chute tube, remove barrier stack, disconnect blowout coil leads from front and rear bushings, and then lift out lower section of arc-chute tube.

CAUTION: ON INSTALLING MAKE SURE BLOWOUT COIL LEADS ARE FASTENED SECURELY.

BARRIER STACK (Fig. 8)

58. For replacing an arc-chute barrier stack remove top section of arc chute tube as outlined in Paragraph 57 and lift out barrier stack. On installation make sure that the barrier stack is inserted with the "Vee" shaped slots toward the bottom of the chute.

FRONT AND REAR ARC RUNNERS AND BLOWOUT COILS (Fig.8)

59. Should it be found necessary to replace an arc runner, remove the top section of the arc chute tube and barrier stack as outlined in Paragraphs 57 and 58. Then after the blowout coil leads have been disconnected from the bushings lift out the lower section of the arc chute tube, remove side plate (8-287) and remove screws holding arc runners (8-272) in place, remove blowout core (8-293), then remove coil and connected arc runner. To reassemble reverse procedure.

FLASH PLATES (Fig. 8)

60. Should it be found necessary to replace a flash plate (8-289), remove top section of arc chute tube, barrier stack, lower section of arc chute tube, blowout coils and arc runners as described in Paragraphs 57-59 and the desired side of the lower arc chute tube. The flash plate may then be unfastened from the support plate. To reassemble reverse procedure.

ARCING CONTACTS (Fig. 6)

61. To remove the stationary arcing contact remove phase barriers and arc chute assembly as described in Paragraph 57, and the adjusting screw (6-82) in the arcing contact. The contact may then be pushed from its slot. To reassemble reverse the procedure and adjust contact as outlined in Paragraphs 28 & 29 making sure that all connections are made, springs in place, and fastenings secure. Care should be taken to insure that spacer (8-77) is in place between arcing contact (8-79) and spring (8-80). Also that spacer (8-88) is in place under springs (8-78,81).

MAIN CURRENT CARRYING CONTACTS (Fig. 6)

62. To remove the main current carrying contacts (6-91) remove the phase barriers and arc chute assemblies as outlined in Paragraphs 57-58. Remove the bakelite cover plates (6-85) from the front contact block, after which the contact fingers can be pushed from the retaining slot. On replacement make sure springs, spacers and contact fingers are in proper relationship and free of binds and that all connections are made and fastenings secure.

DISCONNECT CONTACT ARMS (Fig. 7)

63. The disconnect contact arms are fastened to the lower stud by means of a bolt and stover locknut and may be removed by removing the bolt (7-109) and inner bearing tube (7-120). Care should be taken on reassembly to set the hinge joint pressure as described in Paragraph 30. The arcing contact (7-113) may be removed from the disconnect arms by removing the two screws (7-114) holding it in place.

MAGNETIC BLOWOUT PLATES (Fig. 1)

64. The magnetic blowout cores (1-294), right and left hand, front and rear, are merely set in place on support (1-52) and can be removed by lifting them up and out of the locating notches.

BUSHING ALIGNMENT (Fig. 1)

65. Proper bushing alignment is of extreme importance for the easy and exact mating of primary contacts as the movable portion is moved into service position in the cubicle. Bushings have been jig aligned with greatest care at the factory prior to shipment. If the occasion arises in the field where alignment of bushings has to be disturbed, realignment will have to be done by taking exacting measurements prior to starting any disassembly.

66. When it is necessary to remove or disturb a bushing for any purpose, the other bushings hould not be disturbed in any manner in order that they can be used for reference points when taking measurements for alignment.

67. After bushings have been properly aligned and secured the movable portion should be moved slowly into position in cubicle and the centering of finger contacts in stationary tubes checked. If misalignment is noted, the movable portion should be removed from cubicle, bushing alignment checked, and corrections made.

BUSHING STUD REMOVAL (Fig. 3)

68. When it is found necessary to replace a bushing stud remove the phase barriers and arc-chute assemblies (refer to Paragraphs 56 and 57) from all phases for ease of access.

CAUTION: WHEN REMOVING A BUSHING STUD DO NOT DISTURB THE OTHER BUSHINGS AS THEY MUST BE HELD IN CORRECT POSITION FOR REFERENCE SEE PARAGRAPH 65.

SUGGESTED MAINTENANCE CHECK LIST FOR TYPES MB-250, MC-150, MC-250, MC-500 AIR MAGNETIC CIRCUIT BREAKERS

(REFERENCES ARE TO INSTRUCTION BOOKS BWX-6375, 6376, 6380, 6381)

The following list is intended to serve as an easy to use guide for the purpose of insuring complete and adaquate servicing of the equipment at the regularly scheduled maintenance intervals.

A routine service inspection should be made at six month or 2000 operation intervals, whichever comes first. The actual service interval and the amount of servicing required will usually be determined by the particular conditions at the installation and will be influenced by such things as the number of operations, number of fault interruptions, cleanliness of the equipment, and past experience with the equipment.

Servicing is usually intended to cover adjusting, cleaning, lubricating, tightening, inspection, test etc. A permanent record is usually desirable and should list for each serial number the date, operation counter reading, general condition of equipment, and work done by serviceman.

For new equipment not yet in service, refer to paragraph 1 through 10 of the instruction book.

1. Prepare breaker for servicing by removing phase barriers, arc chute top section, barrier stack, blowout side plates and arc chute lower section. All parts lift off easily without removing hardware, except for arc chute lower section which requires the blowout coil terminals to be loosened. Refer to Fig. 8.

2. Operate breaker with maintenance closing device to check general operation and freedom of movement.

3. Visually inspect all parts during all phases of servicing.

4. If a travel recording device is available, it will furnish an excellent indication of the mechanical operation of the breaker. Refer to paragraph 50.

5. Clean all parts of breaker. An air blower is useful in removing dust from generally inaccessible places.

6. Remove disconnect arms as a unit by removing bolt 7-109. Refer to Fig. 7. Carefully inspect all contact surfaces in hinge joint. Contact washer 7-105 and adjacent surfaces should be clean and free of roughness

or galling. Clean parts thoroughly and lightly brush off the felt sealing washer. Lubricate contact washer and mating surfaces by rubbing in micro-fine dry graphite used sparingly. Reassemble hinge joint and adjust hinge contact pressure per paragraph 30. (Note - older instruction books may state 8 to 12 pounds pull - 6 to 10 is adaquate).

7. Check operating mechanism toggle adjustment per paragraph 31. Adjustment is by spacer 4-226.

8. Check trip latch (4-141) adjustment per paragraph 32.

9. Check latch roll stop screw (4-224) adjustment per paragraph 32.

10. Check prop latch (4-198) adjustment per paragraph 32.

11. Check trip pin (9-131) clearance per paragraph 37.

12. Check trip pin (9-131) aftertravel per paragraph 37.

13. Check latch check switch (12-175) adjustment per paragraph 35. Check freedom of movement, lubricate arm.

14. Check limit switch (Fig. 11) adjustment per paragraph 34. Operate manually and electrically. Inspect to see that contacts are clean and make properly.

15. Check stroke of main contact per paragraph 28.

16. Check adjustment of main contact per paragraph 29.

17. Check auxliary switch adjustment per paragraph 33. Inspect condition of contacts.

18. Check control relay for proper action, check condition of contacts.

19. Manual trip rod should be such that end of rod is within 1/16" of the trip armature, but not in contact with it hard enough to change the armature position. Adjustment is by positioning collar on rod.

20. Position indicator should have full travel. Slack in operating wire may be taken up by putting a kink in the wire.

21. Operation counter is actuated by a spring which should be adjusted for minimum force by positioning of the counter arm.

22. Mechanical trip interlock (2-322) should be adjusted to trip the breaker within 5/16 movement when removing breaker from fully inserted position in cubicle. The rod that engages the latch should clear the latch by 1/32 to 1/16 and the trip roller should clear the cam on the cubicle floor by at least 1/16 when breaker is fully inserted.

23. Check all wiring for frayed or broken wires, tighten all terminals.

24. Check all hardware for tightness (see special instructions for hinge joint hardware, item 6 above). Note that Stover locknuts are used in many places. These nuts may be identified by the slightly egg-shaped hole on one end and the parallel grooves on the corresponding face of the nut.

25. Operate breaker manually and electrically. Check operation at minimum close and trip voltage if possible.

26. If breaker is rectifier operated, refer to EWX-6389-1 for rectifier instructions.

27. Reassemble breaker - Be sure blowout coil terminals are properly fastened.

28. Check breaker in cubicle. Check general fit and line-up. Check operation of trip interlock in test position and fully inserted position. Check secondary wiring fingers for good contact. Check grounding contacts for good contact.

29. General. The above points will provide a quick reference for maintenance procedures. Other items may be added as experience dictates. For a more thorough understanding of the equipment, the instruction book should be studied. Refer to paragraphs 47 through 51 for general comments on maintenance and lubrication.

May 1, 1957

ALLIS-CHALMERS MANUFACTURING COMPANY

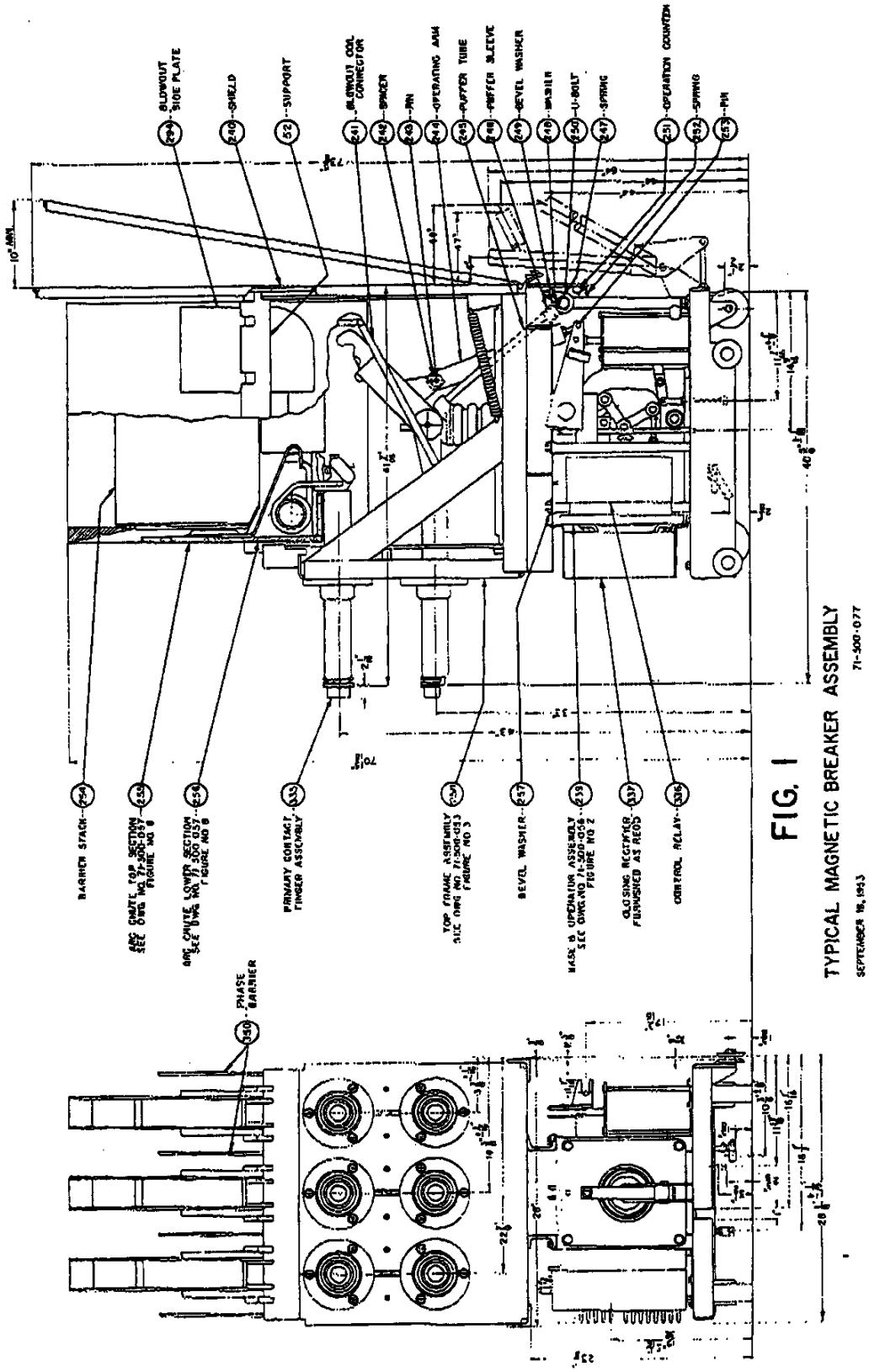

FIG. 1

TYPICAL MAGNETIC BREAKER ASSEMBLY

71-500-077

SEPTEMBER 18, 1953

ALLIS-CHALMERS MANUFACTURING COMPANY

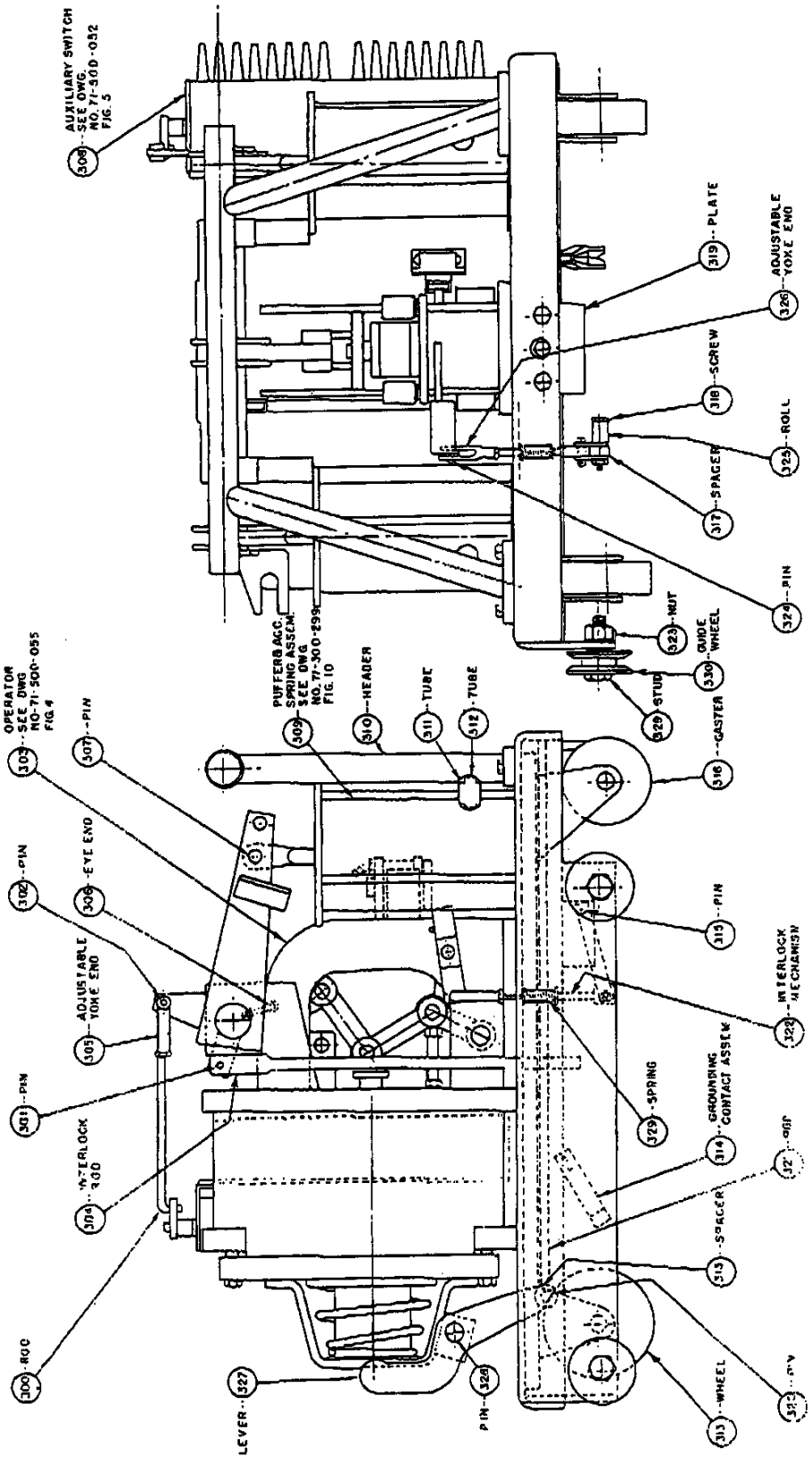

FIG. 2
TYPICAL BASE AND OPERATOR ASSEMBLY

JULY 6, 1955 71-300-056

ALLIS-CHALMERS MANUFACTURING COMPANY

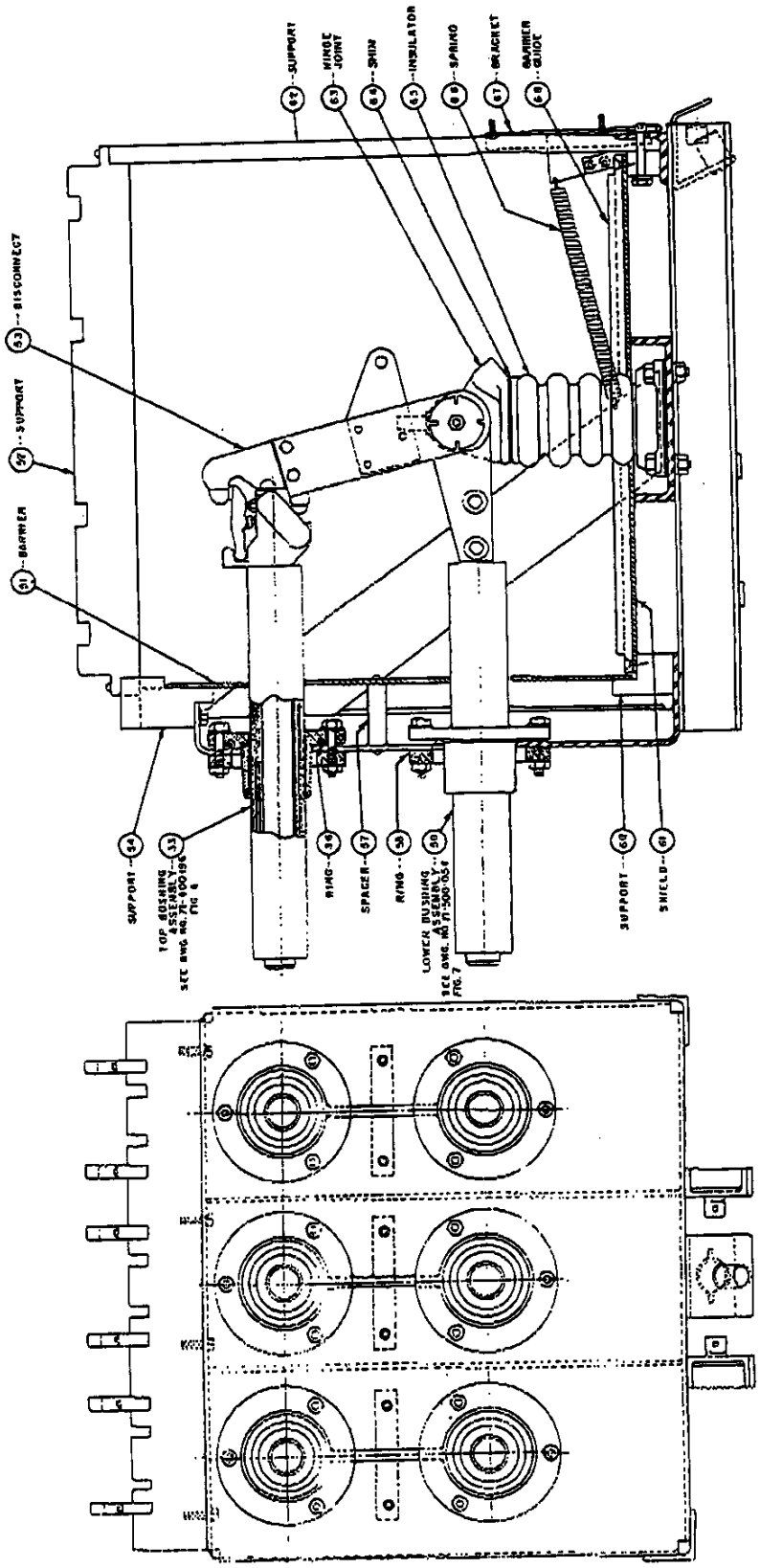

FIG. 3
TYPICAL TOP FRAME ASSEMBLY

JUNE 23, 1983 71-600-083

ALLIS-CHALMERS MANUFACTURING COMPANY

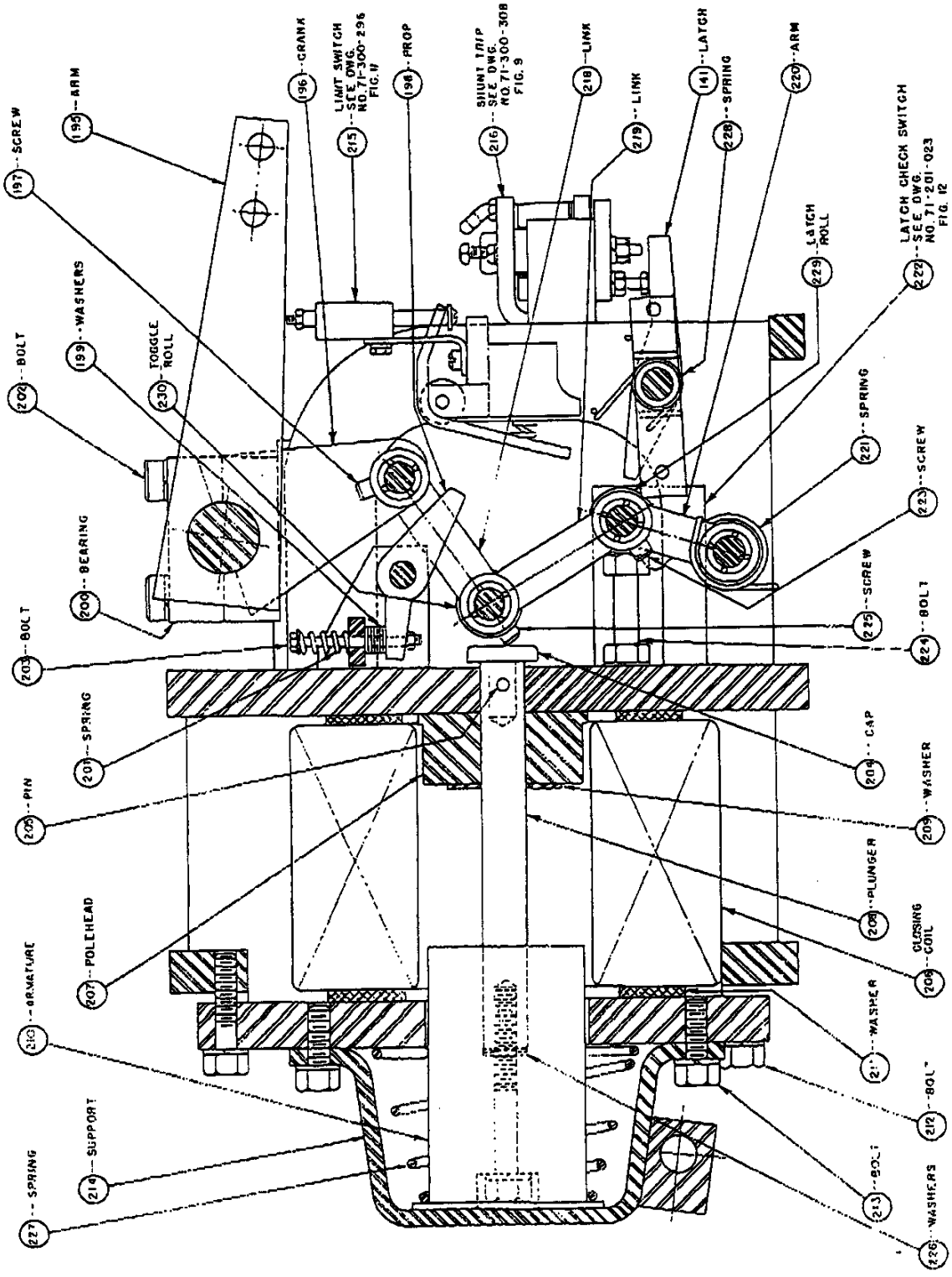

FIG. 4
TYPICAL OPERATOR ASSEMBLY

JUNE 26, 1953

71-500-055

ALLIS-CHALMERS MANUFACTURING COMPANY

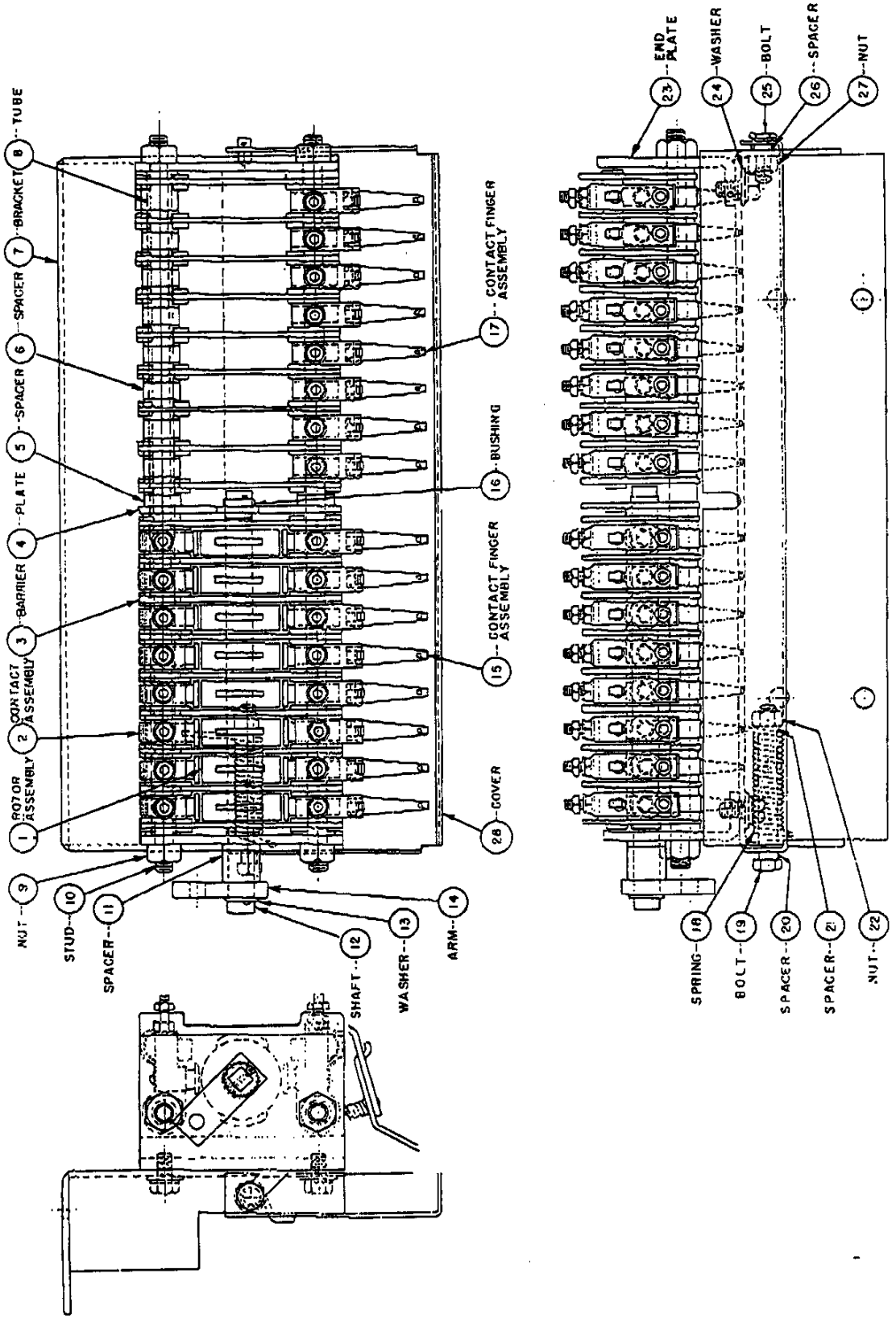

FIG. 5
TYPICAL AUXILIARY SWITCH
JUNE 19, 1953
71-500-052

ALLIS-CHALMERS MANUFACTURING COMPANY

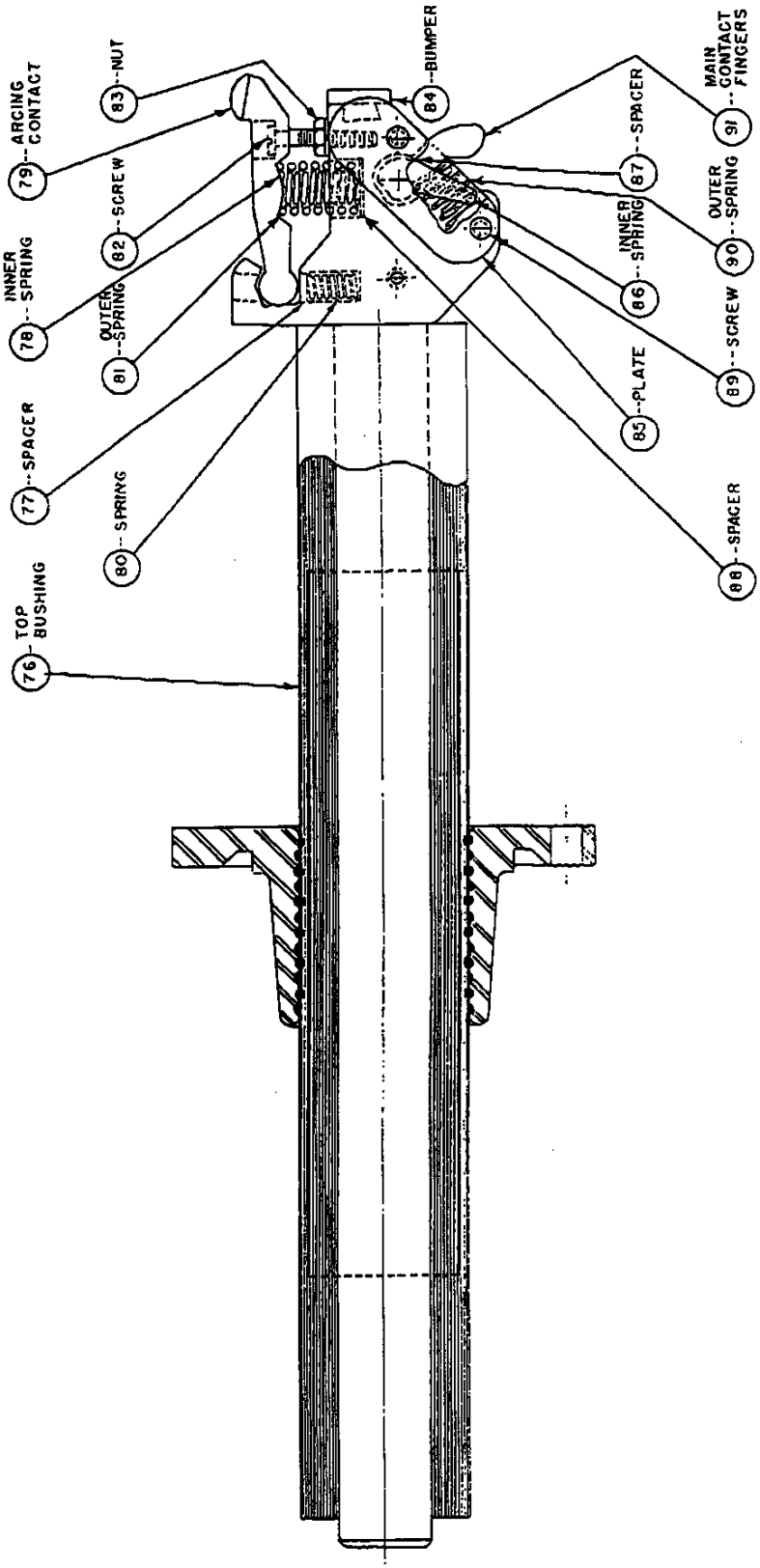

FIG. 6
TYPICAL TOP BUSHING ASSEMBLY

JUNE 24, 1953

71-400-196

ALLIS-CHALMERS MANUFACTURING COMPANY

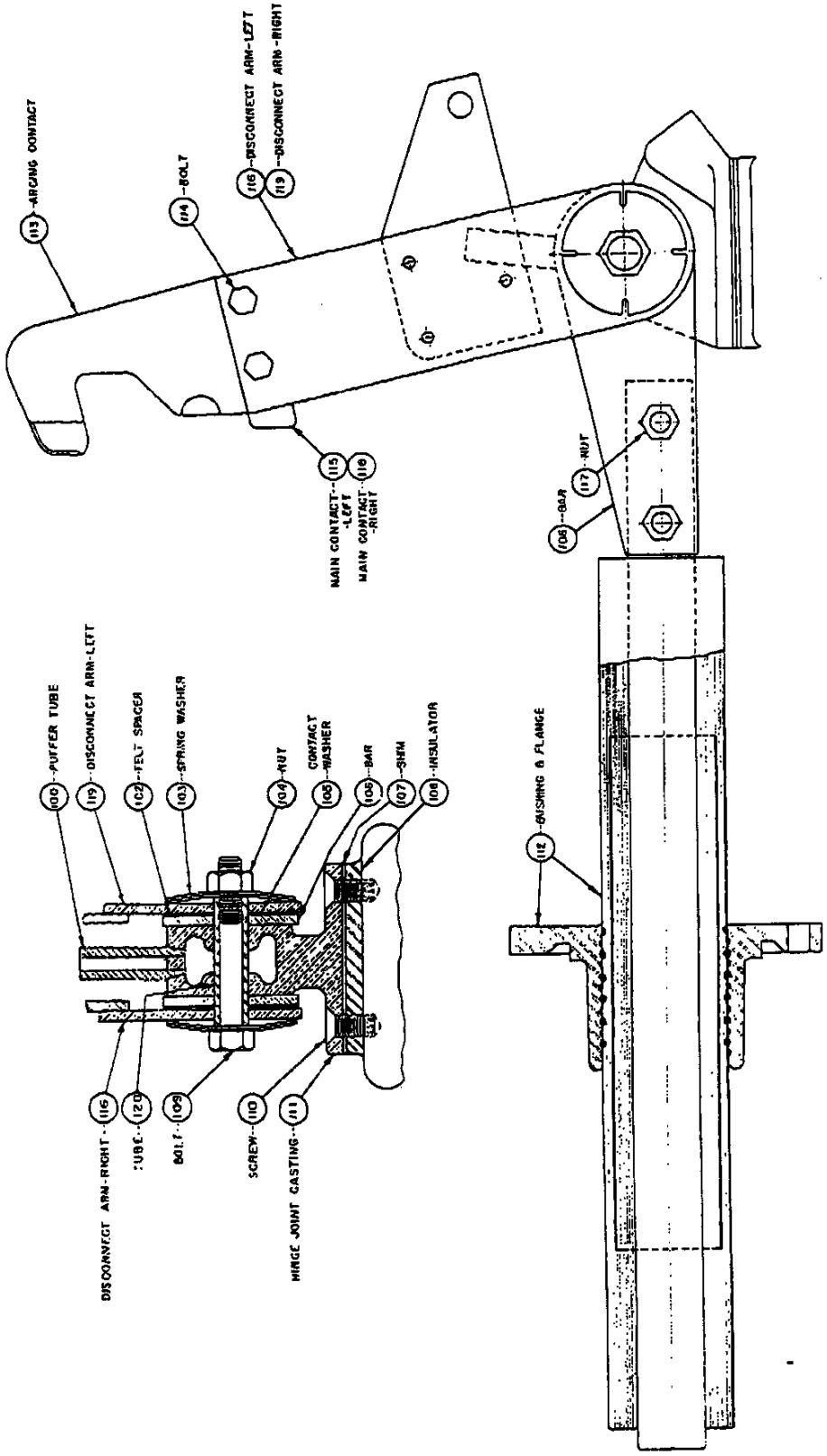

FIG. 7
TYPICAL LOWER BUSHING ASSEMBLY

JUNE 26, 1953

71-500-034

ALLIS-CHALMERS MANUFACTURING COMPANY

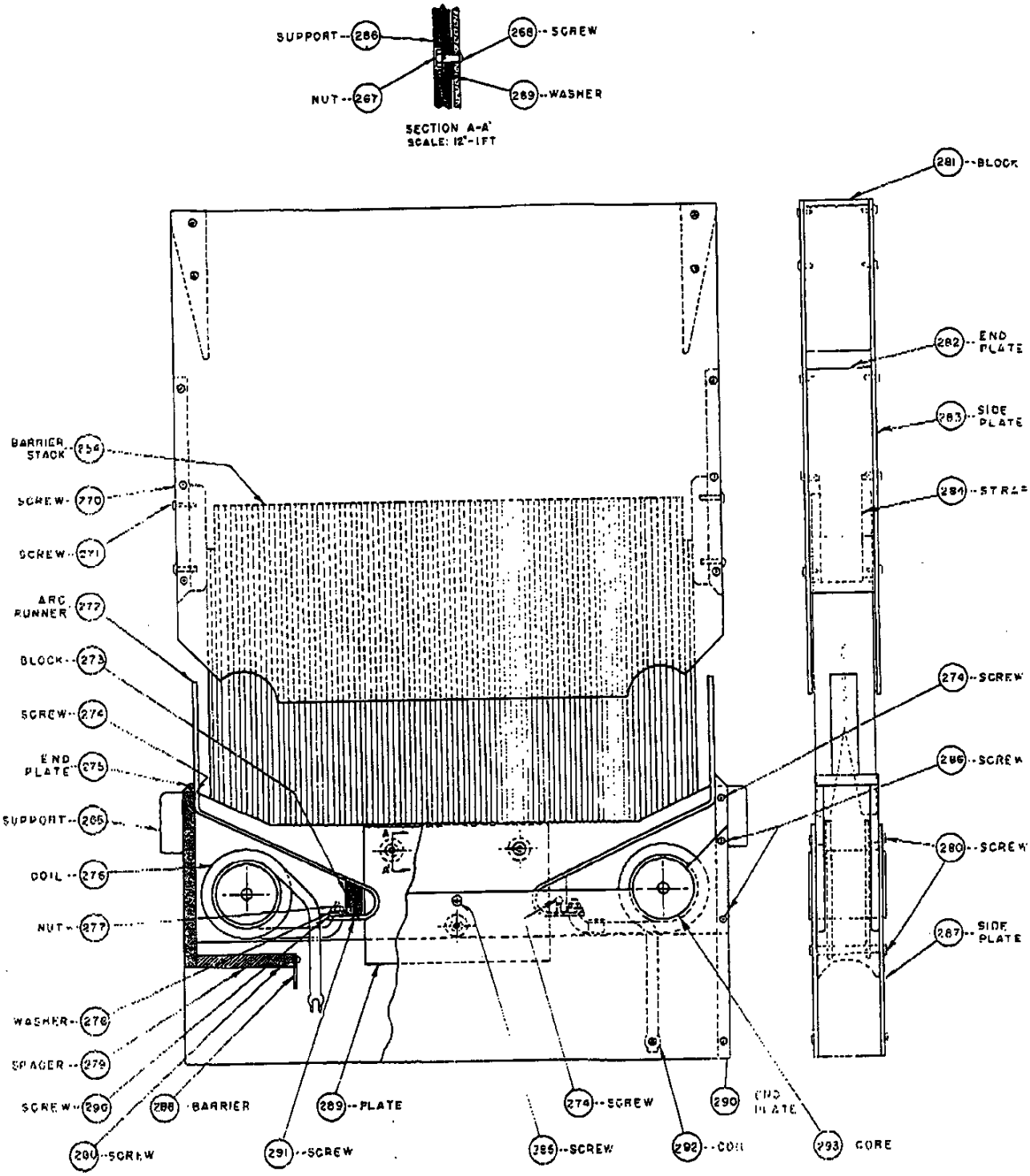

FIG. 8
TYPICAL ARC CHUTE
JULY 2, 1953 71-500-037

ALLIS-CHALMERS MANUFACTURING COMPANY

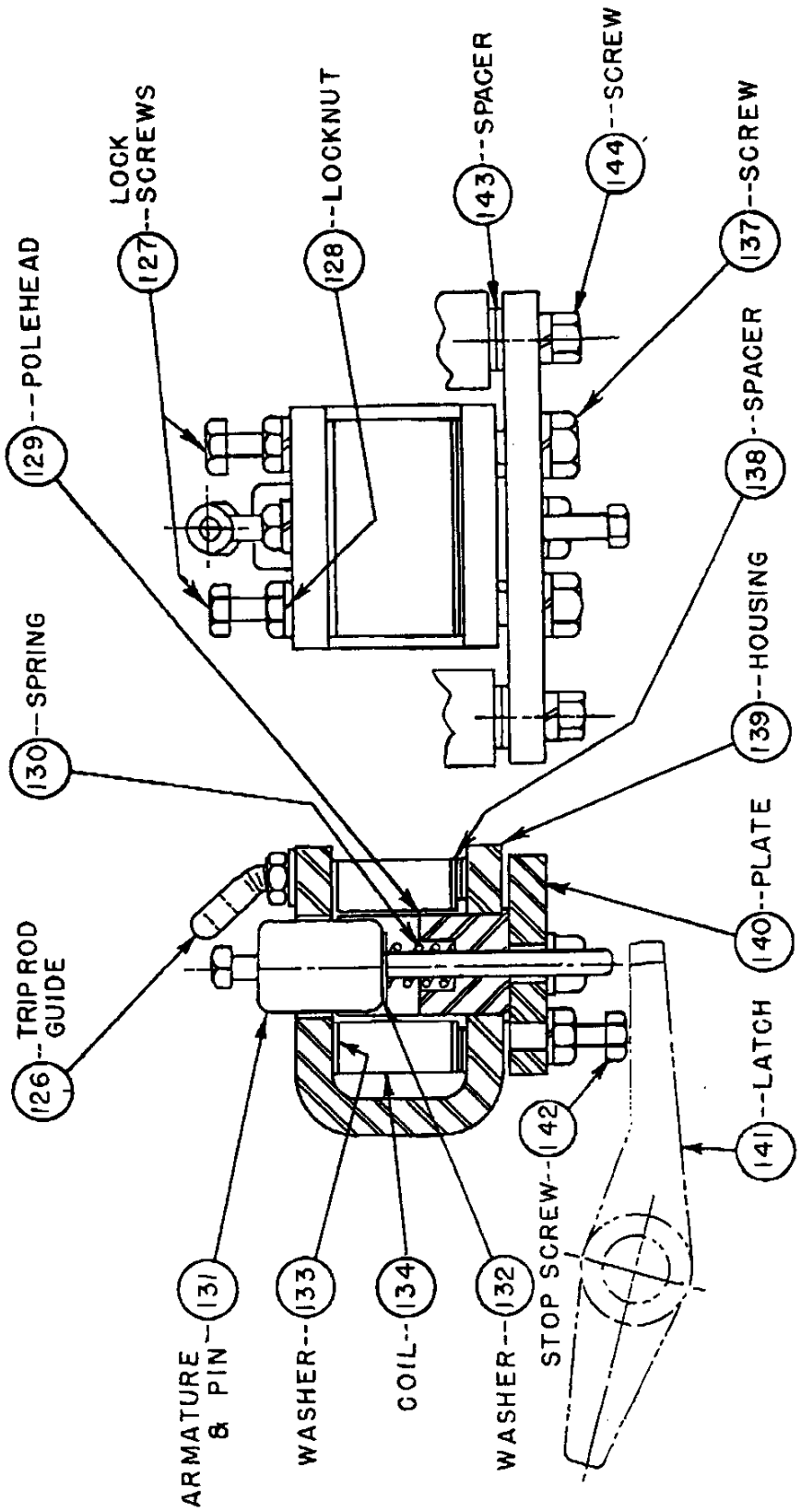

FIG. 9

TYPICAL SHUNT TRIP ASSEMBLY

JUNE 29, 1953

71-300-308

ALLIS-CHALMERS MANUFACTURING COMPANY

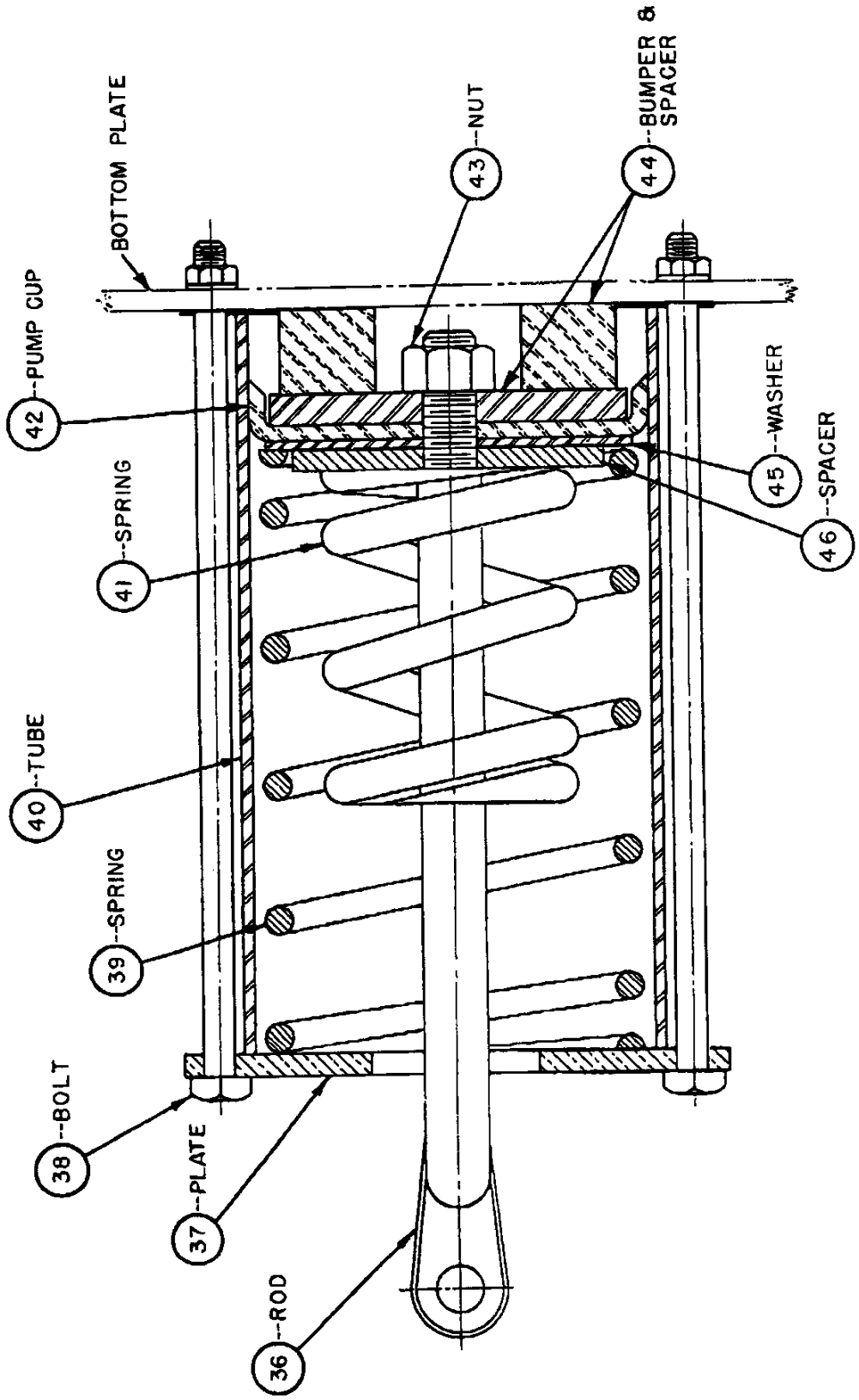

FIG. 10

PUFFER AND ACCELERATING SPRING ASSEMBLY

JUNE 22, 1953

71-300-299

ALLIS-CHALMERS MANUFACTURING COMPANY

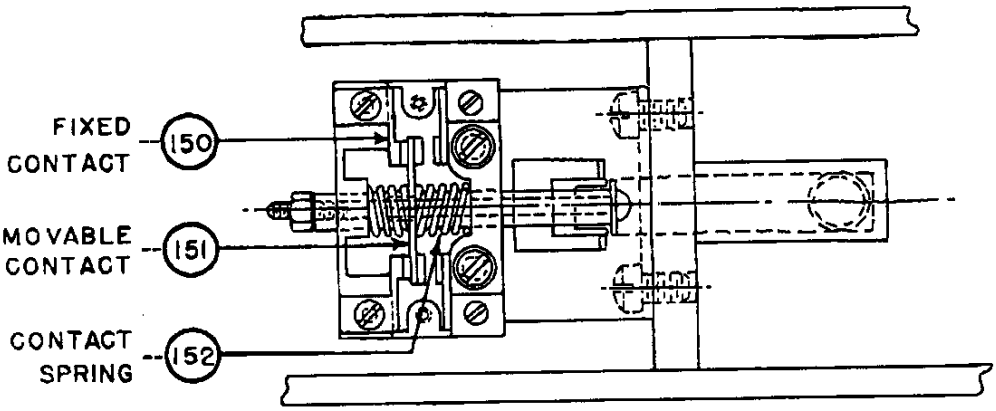

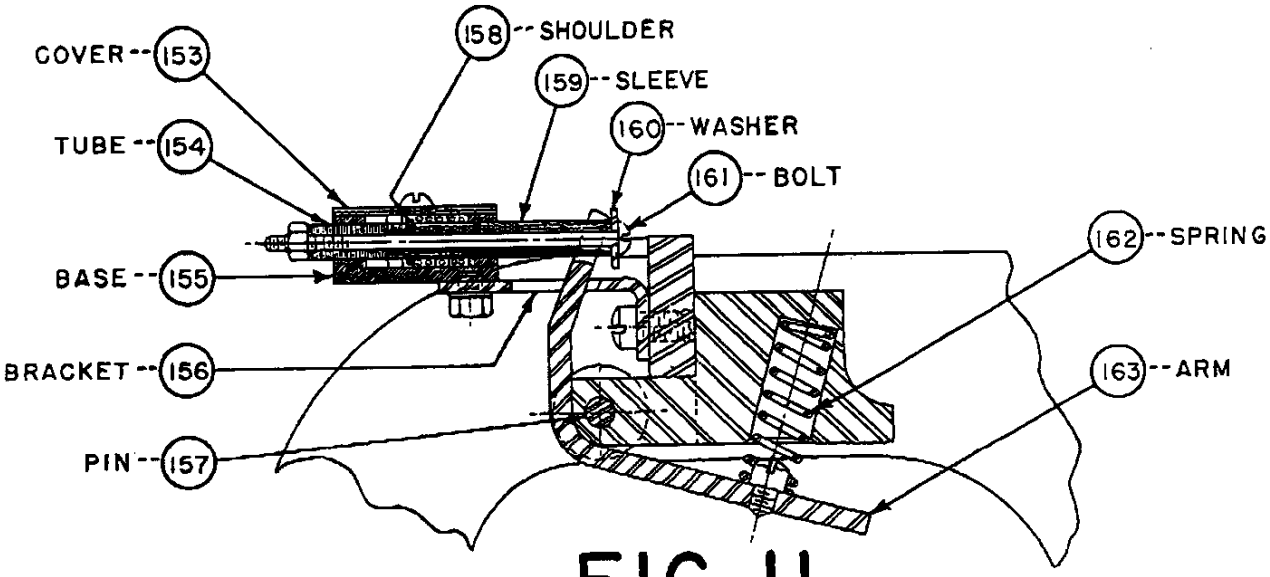

FIG. 11

TYPICAL LIMIT SWITCH

TYPE SO-35

JUNE 12, 1953 71-300-296

ALLIS-CHALMERS MANUFACTURING COMPANY

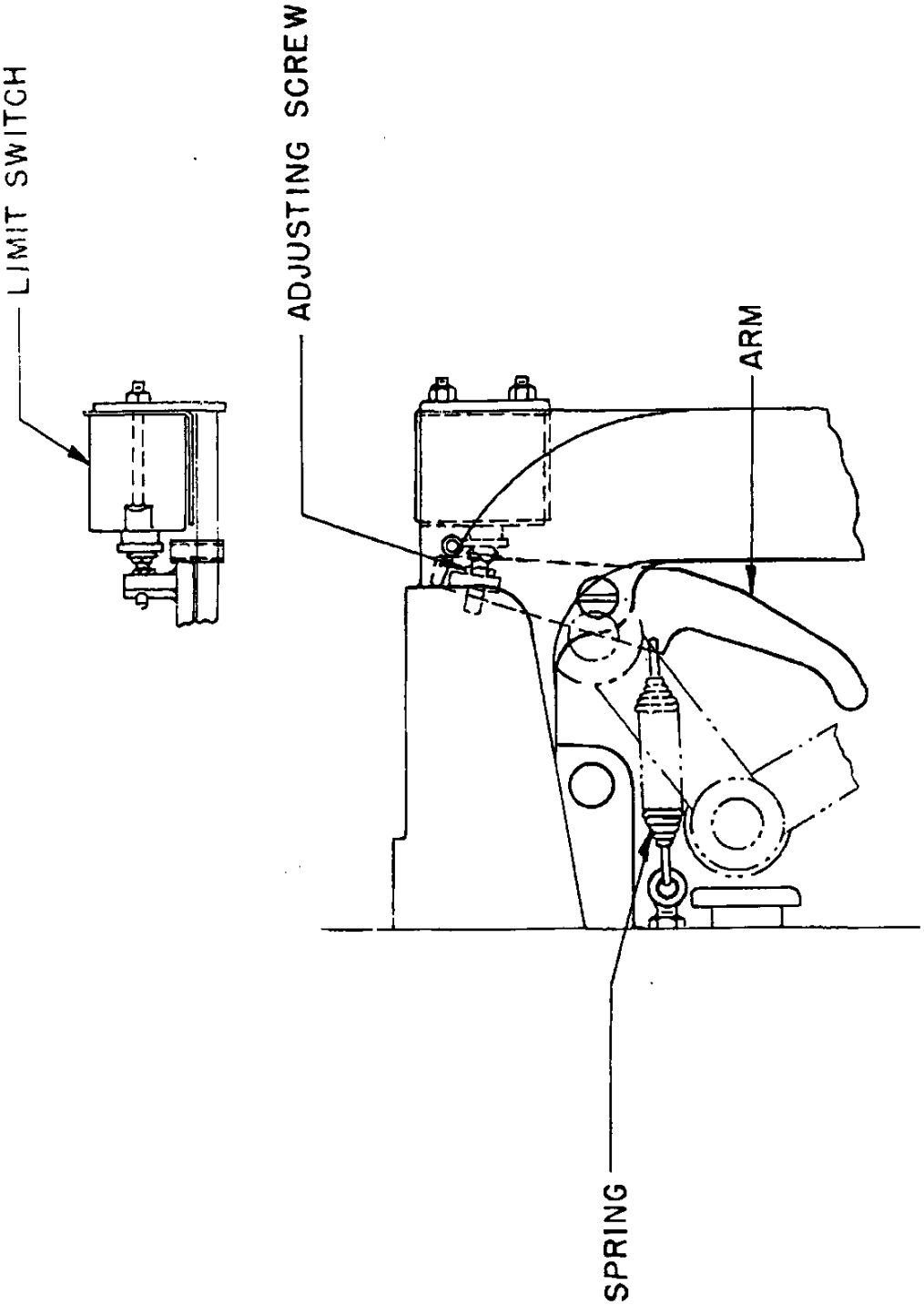

FIG. 11A

TYPICAL LIMIT SWITCH

71-206-850

9-26-1958

ALLIS-CHALMERS MANUFACTURING COMPANY

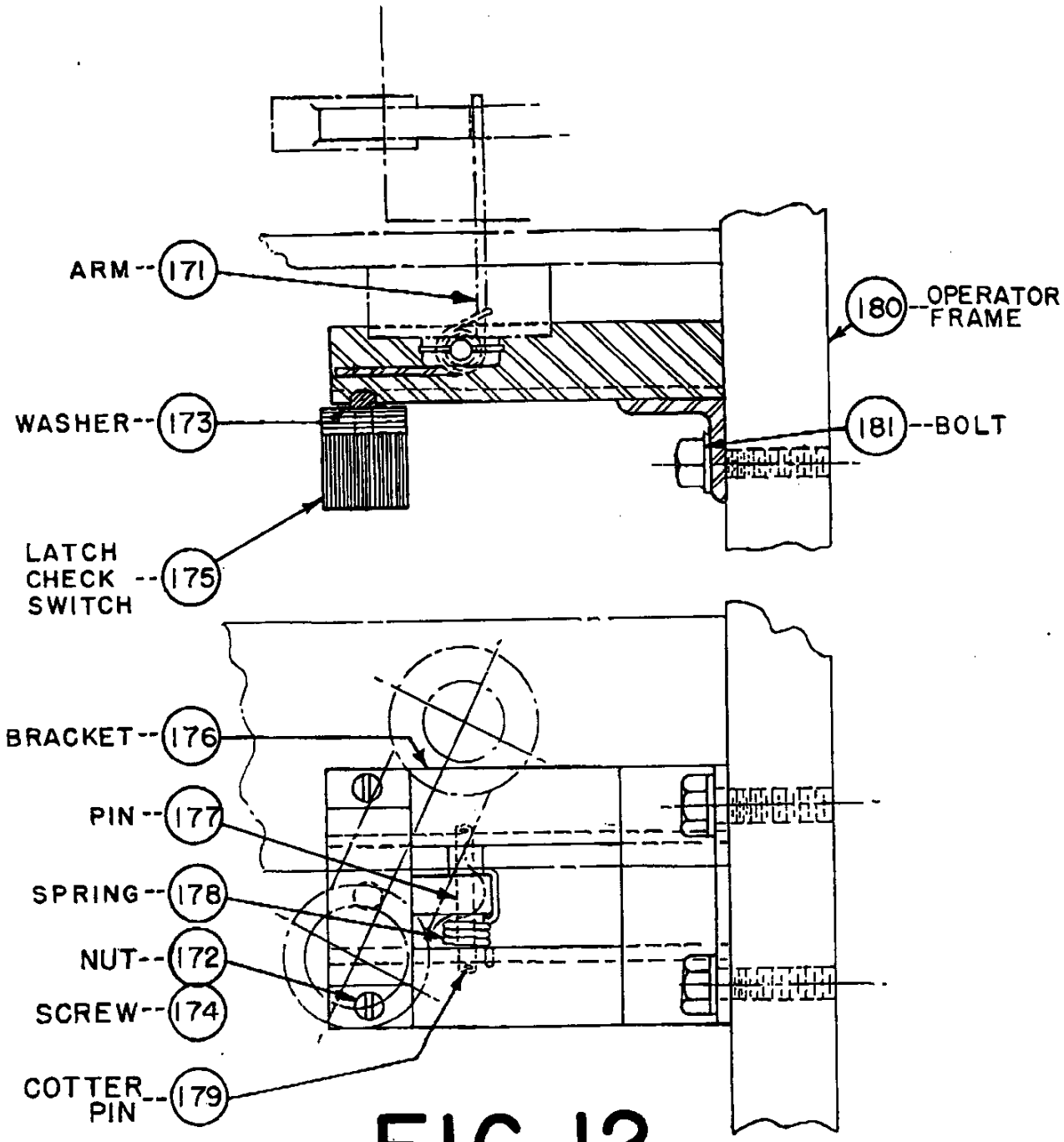

FIG. 12

TYPICAL LATCH CHECK SWITCH

TYPE SO-35

JUNE 16, 1953

71-201-023

ALLIS-CHALMERS MANUFACTURING COMPANY

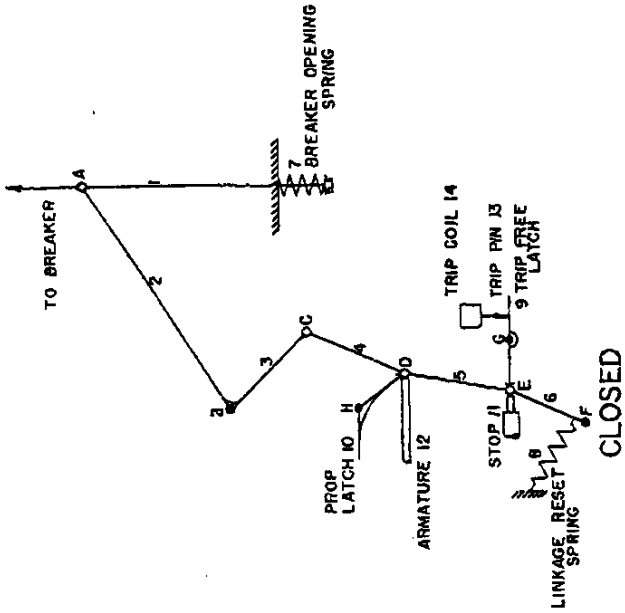

CLOSED
FIG. 14

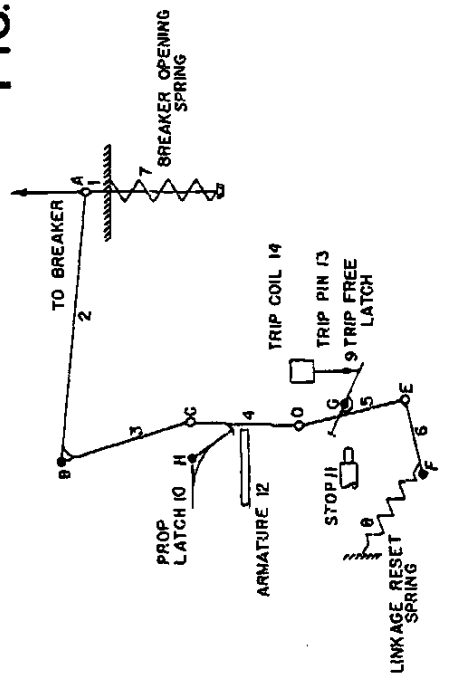

TRIP FREE
FIG. 15

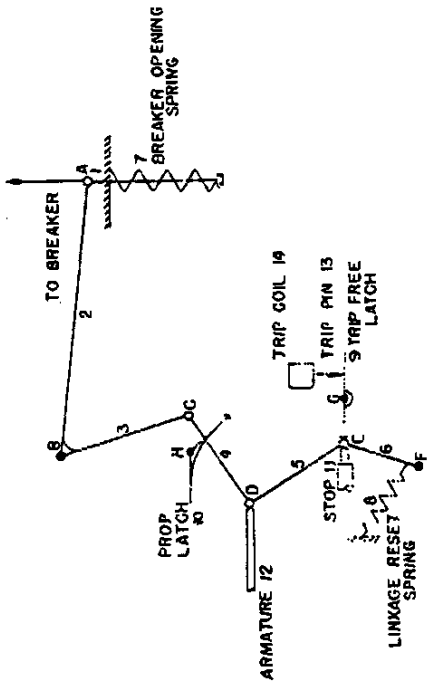

OPEN
FIG. 13

TYPICAL OPERATOR LINKAGE DIAGRAM
71-400-246
SEPTEMBER 9, 1953