INSTRUCTIONS

for

the Installation, Care and Operation of Circuit Breakers and Accessories

TYPE "HJ" MOVABLE PORTION

SECTION 1: TYPE AM-150C RUPTAIR MAGNETIC VERTI-LIFT BREAKER AND AUXILIARY EQUIPMENT

Navy Standard Supplies

SECTION 2: TYPES JAY-802, JDY-801 JDY-802, &JY-8 RELAYS

BOOK BWX-6347-4

These instructions are not intended to cover all details or variations that may be encountered in connection with the installation, operation, and maintenance of this equipment.
Should additional information be desired contact the Allis-Chalmers Mfg. Company.

ALLIS-CHALMERS MFG. CO.

BOSTON WORKS · BOSTON · MASS.

ALLIS-CHALMERS CIRCUIT BREAKER EQUIPMENT

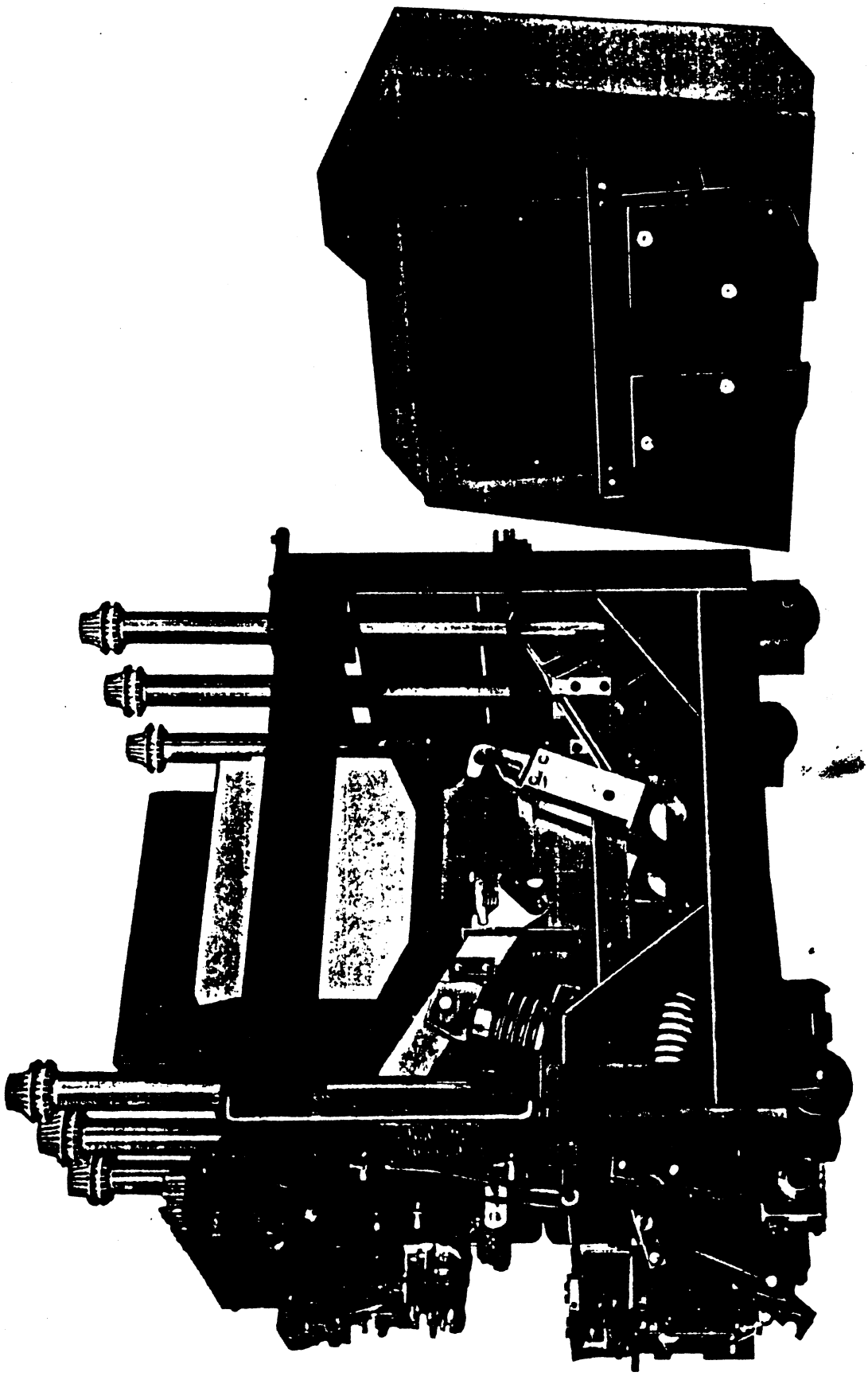

Illustration-160433

1M-7-58-BRP-44074

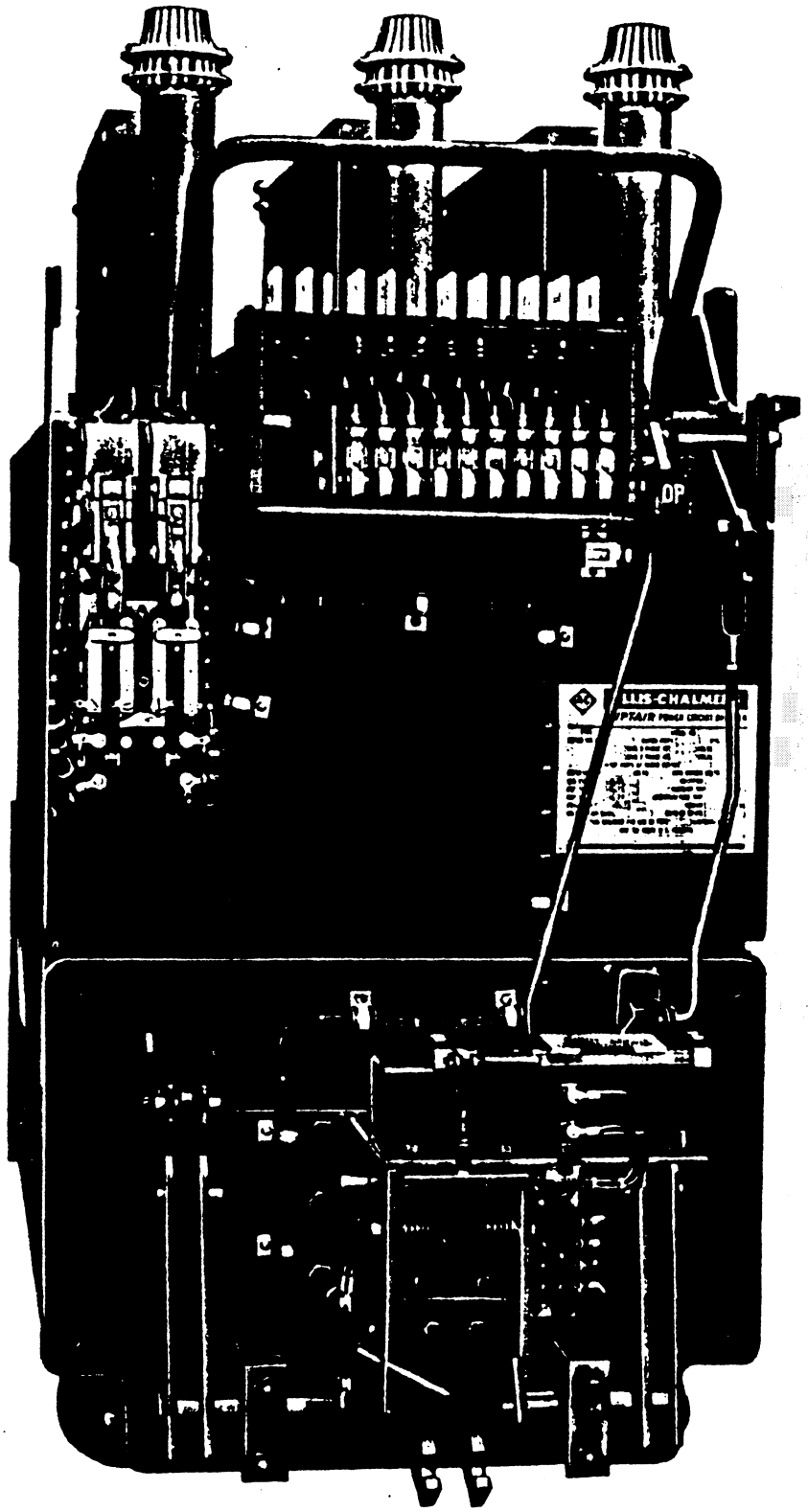

Illustration 160388

1M-7-55-BBP-44074C

ALLIS-CHALMERS CIRCUIT BREAKER EQUIPMENT

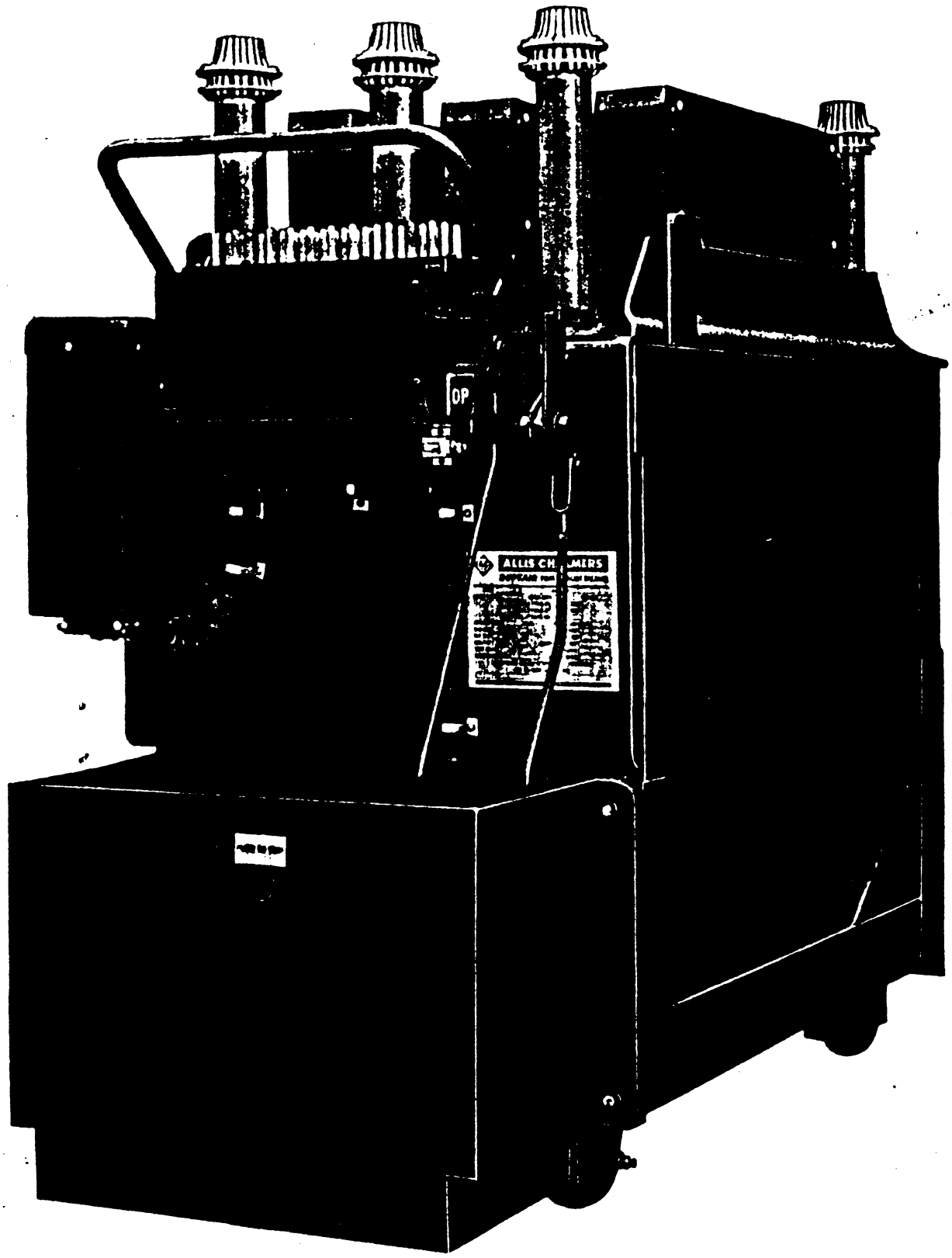

Illustration 160380

1M-7-58-BRP-440

ALLIS-CHALMERS MANUFACTURING COMPANY

INDEX TO INSTRUCTION BOOK
NO. BWX-6347 COVERING THE
ALLIS-CHALMERS TYPE "HJ" MOVABLE PORTION
CONSISTING OF
THE TYPE AM-150C RUPTAIR MAGNETIC VERTI-LIFT BREAKERS
AND AUXILIARY EQUIPMENT

SECTION I

CONTENTS — PARAGRAPH

GENERAL	1-10
PROPER CARE IS ESSENTIAL TO GOOD SERVICE	1-4
INSPECTION	5
RECEIPT	6
STORAGE	7
HANDLING	8
INSTALLATION	9-10
DESCRIPTION	11-19
GENERAL	11-12
CONTACTS	13
ARC-CHUTE ASSEMBLY	14
PHASE BARRIERS	15
BREAKER MECHANISM	16
SOLENOID OPERATOR	17
AUXILIARY EQUIPMENT	18
METHOD OF ARC INTERRUPTION	19
OPERATION	20-23
CLOSING	20-21
OPENING	22-23
ADJUSTMENTS	24-37
GENERAL	24-25
CONTACT ALIGNMENT	26
IMPULSE SPRINGS	27
STROKE	28
CONTACT ADJUSTMENTS	29
CONTACT PRESSURE OF ISOLATING SWITCH CONTACT BLADES	30
TOGGLE SETTING	31
OPERATOR MECHANISM LATCH	32
AUXILIARY SWITCH	33
LIMIT SWITCH	34
LATCH CHECK SWITCH	35
INTERLOCK CRANK	36
TRIPPING UNIT	37

Index to BWX-6347-3 (Cont'd)

CONTENTS. PARAGRAPH

FINAL INSTALLING INSPECTION	38-46
CHECK WITH APPROVED ARRANGEMENT DRAWING	38
LUBRICATION AND OPERATION	39
WIRING	40
CHECKING IN CUBICLE	41
GROUNDING CONTACTS	42
ENGAGEMENT OF PRIMARY AND SECONDARY CONTACTS	43
MECHANICAL INTERLOCK	44
OPERATION IN TEST POSITION	45
FASTENINGS	46
MAINTENANCE	47-51
GENERAL	47
CONTACTS	48
BARRIER STACK	49
BREAKER TIMING	50
LUBRICATION	51
REPLACEMENT PARTS	
HOW TO ORDER	52-54
RECOMMENDED SPARE PARTS LIST	88
INSTALLATION OF REPLACEMENT PARTS	55-87
GENERAL	55
PHASE BARRIERS	56
ARC-CHUTE ASSEMBLY	57
BARRIER STACK	58
FRONT AND REAR ARC RUNNERS AND BLOW OUT COILS	59
FLASH PLATES	60
ARCING CONTACTS	61
MAIN CURRENT CARRYING CONTACTS	62
DISCONNECT CONTACT ARMS	63
MAGNETIC BLOWOUT PLATES	64
BUSHING ALIGNMENT	65-67
FRONT BUSHING STUD	68-73
FRONT BUSHING SUPPORT INSULATOR	74-75
REAR BUSHING STUD	76-80
REAR BUSHING SUPPORT INSULATOR	81-83
CLOSING COIL	84-86
TRIP COIL - SHUNT TRIP	87
SECTION II	
INSTRUCTION BOOK FOR TYPES JA-802, JD-801, JD-802, and JY-8 RELAYS	

ALLIS-CHALMERS MANUFACTURING COMPANY

SUGGESTED MAINTENANCE CHECK LIST
FOR
TYPES AM-75, AM-150C-AM-150D-AM-250C-AM-250D
AIR MAGNETIC CIRCUIT BREAKERS

(REFERENCES ARE TO INSTRUCTION BOOKS)
BWX-6458
BWX-6459
BWX-6473
BWX-6347
BWX-6348

The following list is intended to serve as an easy to use guide for the purpose of insuring complete and adequate servicing of the equipment at the regularly scheduled maintenance intervals.

A routine service inspection should be made at six months or 2000 operation intervals, whichever comes first. The actual service interval and the amount of servicing required will usually be determined by the particular conditions at the installation and will be influenced by such things as the number of operations, number of fault interruptions, cleanliness of the equipment, and past experience with the equipment.

Servicing is usually intended to cover adjusting, cleaning, lubricating, tightening, inspection, test ect. A permanent record is usually desirable and should list for each serial number the date, operation counter reading, general condition of equipment, and work done by serviceman.

For new equipment not yet in service, refer to paragraph 1 through 10 of the instruction book.

1. Prepare breaker for servicing by removing phase barriers, arc chute top section, barrier stack, and arc chute lower section. All parts lift off easily without removing hardware, except for arc chute lower section which requires the blowout coil terminals to be loosened. Refer to Fig. 12.

2. Operate breaker with maintenance closing device to check general operation and freedom of movement.

3. Visually inspect all parts during all phases of servicing.

4. If a travel recording device is available, it will furnish an excellent indication of the mechanical operation of the breaker. Refer to paragraph 50.

5. Clean all parts of breaker. An air blower is useful in removing dust from generally inaccessible places.

6. Remove disconnect arms as a unit by removing bolt 9-290. Refer to Fig. 9. Carefully inspect all contact surfaces in hinge joint. Contact washer 9-285 and adjacent surfaces should be clean and free of roughness or galling. Clean parts thoroughly and lightly brush off the felt sealing washer. Lubricate contact washer and mating surfaces by rubbing in microfine dry graphite used sparingly. Reassemble hinge joint and adjust hinge contact pressure per paragraph 30. (Note - older instruction books may state 8 to 12 pounds pull - 6 to 10 is adaquate).

7. Check operating mechanism toggle adjustment per paragraph 31. Adjustment is by shims 3-96.

8. Check latch operating mechanism adjustment per paragraph 32.

9. Check trip pin (3-123) clearance per paragraph 37.

10. Check limit switch (Fig. 3) adjustment per paragraph 34. Operate manually and electrically. Inspect to see that contacts are clean and made properly.

11. Check stroke of main contact per paragraph 28.

12. Check adjustment of main contact per paragraph 29.

13. Check auxiliary switch adjustment per paragraph 33. Inspect condition of contacts.

14. Check control relay for proper action, check condition of contacts.

15. Operation counter is actuated by a spring

which should be adjusted for minimum force by positioning of the counter arm.

16. Mechanical trip interlock 2-18 should be adjusted to trip the breaker within 3/8 of linear travel of roll as crank rotates away from breaker and there is a minimum of 1/16" overtravel. The breaker must trip within the first 5/16" of movement as the movable portion is towered from its fully raised position in cubicle. Per paragraph 36.

17. Check all wiring for frayed or broken wires, tighten all terminals.

18. Check all hardware for tightness (see special instructions for hinge joint hardware, Item 6 above). Note that Stover locknuts are used in many places. These nuts may be identified by the slightly egg-shaped hole on one end and the parallel grooves on the corresponding face of the nut.

19, Operate breaker manually and electrically. Check operation at minimum close and trip voltage if possible.

20. If breaker is rectifier operated, refer to rectifier instruction book for instructions.

21. Reassemble breaker - Be sure blowout coil terminals are properly fastened.

22. Check breaker in cubicle. Check general fit and line-up. Check operation of trip interlock in test position and fully inserted position. Check grounding contacts for good contact.

23. General. The above points will provide a quick reference for maintenance procedures. Other items may be added as experience dictates. For a more thorough understanding of the equipment, the instruction book should be studied. Refer to paragraphs 47 through 51 for general comments on maintenance and lubrication.

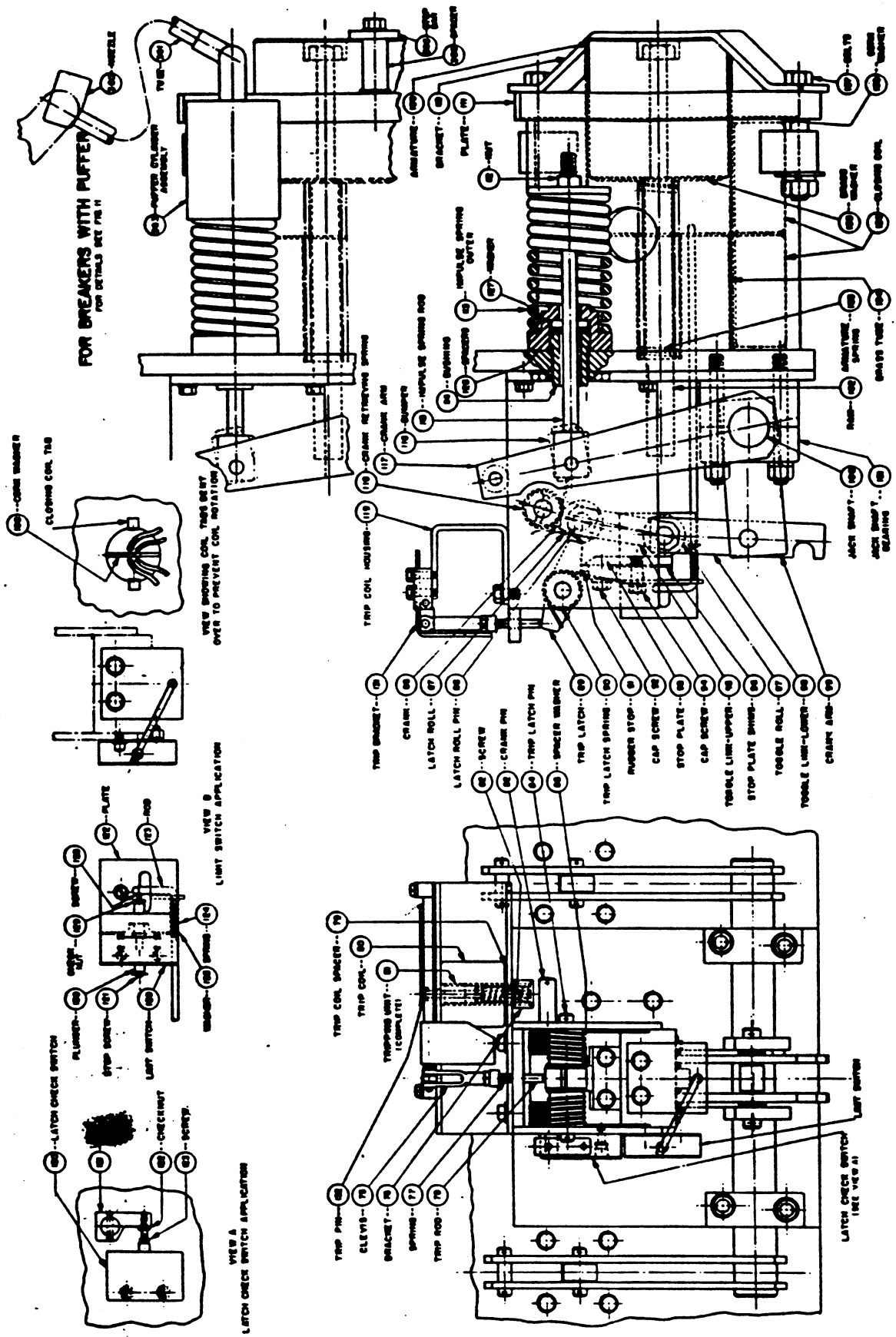

FIG. 3
TYPICAL SOLENOID OPERATOR ASSEMBLY

point. After properly positioning the locknuts (3-112), they are staked in place to insure permanence of adjustment. The contact pressure of the isolating switch contact blades (See Paragraph 30) should be properly adjusted before the accelerating springs are set, since this has some effect on opening velocity.

28. The stroke of the main contact (9-279) is controlled through adjustment of operating arm (2-22). Proper adjustment is obtained when, with the breaker closed, the arcing contact (9-282) bumper surface is not binding tightly on bumper (7-211), and the main contact (9-279) has the maximum possible positive wiping action on the main contact fingers (7-208). Note that the main contacts engage in a "heel and toe" action, first touching at the bottom and then coming to final position at the top, while the bottom initial contact points separate. The described adjustment will provide a separation of the initial contact points of at least 1/64", usually more, up to approximately 3/64". Adjustment is obtained by removing pin that fastens connecting rod (2-22) to crank arm (3-117) loosening checknut and adjusting the length of connecting rod by screwing the rod end in or out until with the closing of the breaker the above conditions of adjustment exist on all three phases. After proper adjustment, make sure that the checknut is made up tight and that cotter pins are properly spread. This adjustment should not be made before the accelerating springs are adjusted (See Paragraph 27).

CONTACT ADJUSTMENT (Fig. 2, 7 & 9)

29. The contacts are carefully adjusted before shipment and no further adjustment should be necessary. However, it would be well to check the adjustment of the arcing and main contacts before installation and periodically thereafter to insure continuous good service. The arcing and main contacts are adjusted as follows: With the stroke set per Par. 28 adjust the stationary arcing contact (7-213) so that it engages the moving arcing contact (9-282) at a point in the stroke when there is 1/4" plus .000 minus 1/16" air gap between the main contact fingers (7-208) and the moving contact (9-279). In general, this gap (arcing contact lead) will decrease slightly with successive adjustments as the arcing contacts wear in service and should not be permitted to become less than 3/16". The adjustment should be made individually on each phase, the 1/4" plus .000" minus 1/16" setting being obtained for each phase by positioning with the maintenance closing device. Each arcing contact will then have approximately the same lead, but all will not necessarily make contact at exactly the same time. The arcing contacts should engage freely and not show any tendency to "stub" when making contact.

CONTACT PRESSURE OF ISOLATING SWITCH CONTACT BLADES (Fig. 9)

30. The contact pressure of the isolating switch contact blades should be adjusted with reference to Figure 9. Proper adjustment is to have the hinge joint adjusted so that with isolating switch just out of contact, a pull of 6 to 10 pounds will move the contacts toward the open position. In order to measure the required pounds, pull to move the contact. It is suggested that one end of a wire or cord be fastened around the movable arcing contact (9-282) just below the arcing contact surface, and the wire or cord extended through back of breaker frame and attached to a spring scale. The pull must be made approximately perpendicular to the contact. Adjustment is made by positioning the "Stover" locknut (9-288) on

cap screw (9-290) until the pull registers 6 to 10 pounds. Where "Stover" locknuts have been "staked" in position they should be restaked after any change in adjustment to insure permanence of setting.

TOGGLE SETTING (Fig. 3)

31. With the breaker in the full closed position, i.e. with toggle roll (3-97) against stop plate (3-93) there must be a minimum clearance of 1/16" between roll (3-97) and end surface of ram (3-102) when armature (3-109) is solidly against the pole head. The toggle roll (3-97) should also be approximately 1/8" in the overcenter position. Adjustments if necessary are made by adding or removing shims (3-96) in back of stop plate (3-93). To remove stop plate simply take out cap screws (3-94). However, a check for proper clearance must be made before electrical operation of breaker is attempted. If adjustment is found necessary make sure that all fastenings are secure on completion.

OPERATOR MECHANISM LATCH (Fig. 3)

32. The operator mechanism trip latch (3-89) should be set such that the latch pressure is applied at a point approximately 7/32" above the bottom edge of the latch. This may vary slightly due to the requirements of minimum tripping voltage and operator stability on full voltage electrical closure. A check must be made for proper latching before breaker is operated electrically. A suggested method for checking latch position is as follows: With the breaker in the open position chalk the latching surface of latch and then, with maintenance closing handle, apply pressure such that a line of contact between latch roll (3-87) and latch (3-89) will be indicated on chalked surface. Check latching surface and note whether latch is making contact at a point approximately 7/32" above the bottom edge of the latch. If adjustment is found to be necessary it is made by raising or lowering the rubber stop (3-91) in its clamp, or in the case where latch is riding higher than permissible, by carefully cutting off some of the rubber. Very slight change in position of rubber stop results in a greater increment of change at end of latch. Thus care must be exercised in adjustment of rubber stop. After setting rubber stop to correct height make sure that it is set square in clamp as stop will tend to crawl when clamp is tightened. Make sure that clamp is tightened evenly and securely.

AUXILIARY SWITCH (Fig. 2 & 10)

33. The auxiliary switch located within the box of the plugging device (1-4) has been adjusted at the factory and as normal installations should not require further adjustments, care should be exercised in making any changes. However, before, the breaker is placed in service a check should be made to see that the combination crank and position indicator (10-348) throws approximately equal distances on either side of a horizontal centerline. The adjustment for throw of lever is made by positioning clevis on connecting rod (2-16). After correct adjustment is made, make sure all fastenings and locknuts are secure. Each rotor (10-341) can be adjusted individually in steps of 22-½ degrees (see cut) merely by pressing the contact to one side against the spring and rotating it within its insulated rotor housing until it snaps into the desired position.

LIMIT SWITCH (Fig. 3)

34. The limit switch is located on the lower left side of the operator frame and contains both the "a-a" and "b-b" stages of limit switch contacts. The switch has been adjusted correctly before leaving the factory. However, a check should be made to see that with the solenoid de-energized screw (3-128) is adjusted such that "b-b" contacts are making with approximately 1/32" additional follow up. Adjustment is made by loosening checknut (3-129) and positioning screw (3-128) such that positive contact is obtained with 1/32" follow up. Then check to see that additional overtravel of the contact plunger (3-130) is possible. After screw (3-128) has been positioned correctly, lock in place with checknut (3-129).

LATCH CHECK SWITCH (Fig. 3)

35. The latch check switch (when furnished) is mounted on the left side of operator frame and the switch operating crank (3-121) is pinned to the crank pin (3-83). Proper adjustment has been made prior to shipment. However, a check should be made to see that contacts are closed only when trip latch (3-89) is in the latched or normal position. When in this position there should be 1/32" positive overtravel of plunger after contact is made. The making of contact with 1/32" overtravel is controlled by setting of screw (3-123). If adjustment is found necessary, make sure that checknut (3-122) is made up tight on completion.

INTERLOCK CRANK (Fig. 2)

36. The mechanical interlock crank (2-18) located at front right hand side of breaker has been properly adjusted at the factory and no further adjustment should be necessary. However, a check should be made to see that the breaker trips in the first 3/8" of linear travel of roll as crank rotates away from breaker, and that there is 1/16" minimum overtravel. Also, with this setting of interlock crank the breaker must trip within the first 5/16" of movement as the movable portion is lowered from its fully raised position in cubicle. Correct adjustment is made simply by adjusting clevis (2-37) on trip interlock rod such that the above requirements are fulfilled. Care should be taken to insure that the trip interlock arm (2-36) rests on the trip coil housing (3-119) when the breaker is in the fully raised position. After correct adjustment has been made, lock clevis in position with checknut and make sure that cotter pins are spread properly. If with this adjustment the breaker fails to trip in the first 5/16" as it is lowered from fully raised position in cubicle, slightly earlier tripping can be obtained by lengthening the trip rod (3-78). When in adjustment lock in position with checknut.

NOTE: To insure mechanical stability on closing, there should be a norminal 1/16" clearance between trip rod (3-78) and trip latch (3-89).

TRIPPING UNIT (Fig. 3)

37. The shunt trip or standard trip application as shown on Fig. 3 is factory set and should need no further adjustment. In nominal adjustment, trip pin (3-132) should float freely on its spring and should not bear against trip bracket (3-130).

FINAL INSTALLING INSPECTION

CHECK WITH APPROVED ARRANGEMENT DRAWING

38. Make sure that the Ruptair magnetic breaker is properly set up in accordance with the approved arrangement drawing.

LUBRICATION AND OPERATION

39. Check to see that the mechanism operates freely and that all shaft bearings have been lubricated with a light film of Gargoyle A- No. 0 grease or equal. Prior to shipment the engaging areas of main current carrying contact fingers, movable arcing contact, hinge area of contact arms and solenoid armature have been rubbed with MICROFINE DRY GRAPHITE and all excess wiped off. If occasion arises when any of the above mentioned parts have to be replaced in field they should be treated with the graphite before installation.

CAUTION: GRAPHITE MUST BE KEPT OFF ALL INSULATION UNDER PENALTY OF REPLACING INSULATION AS IT CANNOT BE WIPED OFF SURFACE.

WIRING

40. Inspect all insulated wiring and check on all terminal connections. Test the wiring for possible grounds or short circuits.

CHECKING IN CUBICLE

41. Check to see that when installing the movable portions in cubicle the lift pins and hooks on breaker frame engage properly with mating parts of lifting gear.

GROUNDING CONTACTS

42. Check to see that the grounding contacts at rear of breaker make proper contact with stationary contact in cubicle as breaker is raised into position.

ENGAGEMENT OF PRIMARY AND SECONDARY CONTACTS

43. As the movable portion is raised into final position, check to see that the primary and secondary contacts are in alignment for proper contact engagement. With breaker fully raised against stop in cell, there should be 5/16" plus or minus 1/16" clearance between bakelite plates of movable and stationary portions of secondary disconnect device.

MECHANICAL INTERLOCK

44. Check to see that the roll end of the mechanical interlock operating crank at front of breaker falls into slot of tripping cam in fixed portion when breaker has been raised to its final position in cubicle. Check to see if breaker can be closed only in either its test position or in its final raised position.

OPERATION IN TEST POSITION

45. The breaker should be operated several times in the test position to see that all parts are working smoothly before it is placed in service.

FASTENINGS

46. Check to make sure that all fastenings are secure.

MAINTENANCE

GENERAL

47. Upon the proper operation of the circuit breaker depends the safety of the operators and the successful functioning of the connected apparatus, therefore, the breaker should have regular systematic, thorough understanding inspection and maintenance. Be sure that the breaker and its mechanism is disconnected from all electric power before any maintenance is attempted. Inspect the breaker and auxiliary equipment mechanically and electrically at least once every six months.

CONTACTS

48. Inspect all contacts frequently, depending on severity of service. Replace badly pitted or burned contacts before they are damaged to such an extent as to cause improper operation of the breaker.

BARRIER STACKS

49. The arc-chute barrier stacks are very fragile and should be handled carefully. The barrier stacks (8-231) should be inspected for erosion of the plates in the areas of the slots. Stacks should be replaced when erosion progresses to a point such that the slots of the shortest plates have been extended to the lowest hole through the plate above the slot. They should be likewise replaced if plates are broken in vicinity of the slots.

BREAKER TIMING

50. Check the contact adjustment and breaker timing occasionally, also check adjustments of auxiliary equipment and see that they function properly. A comparison of breaker timing at any period of maintenance with that taken new, will immediately indicate a condition of maladjustment or friction should the timing vary more than 1/2 cycle on opening or 2 cycles on closing with the same coils.

LUBRICATION

51. Keep shaft bearings of breaker mechanism adequately lubricated with a light film of Gargoyle A - No. 0 or its equal.

REPLACEMENT PARTS

HOW TO ORDER

52. When ordering replacement parts, refer to Figs. 1, 2, 3, 7, 8, 9, 10 and to

the following parts list. Specify quantity, reference numbers, and give description of parts required. Also, give type, amperage, voltage and serial number of breaker on which parts are to be used.

EXAMPLE:- 3 - arcing contact, reference 7-213, for use on type AM-150C, 1200 amp., 4160 volts, Serial Number 295500, Ruptair Circuit Breaker.

53. A sketch of the part wanted will help materially if any uncertainty exists.

54. It is recommended that sufficient parts be carried in stock to enable operators of circuit breakers to replace without delay any worn, broken, or damaged parts. In the last two columns of the Spare Parts List are given quantities of the parts which are recommended to be kept in stock.

INSTALLATION OF REPLACEMENT PARTS

GENERAL

55. Before removing part to be replaced, observe its function and adjustment. By so doing, it is usually possible to avoid any appreciable amount of adjustment work after the installation of the replacement parts.

CAUTION: BEFORE REMOVING ANY PART, MAKE SURE THAT THE BREAKER AND ITS OPERATING MECHANISM IS DISCONNECTED FROM ALL ELECTRIC POWER.

PHASE BARRIERS (Fig. 2)

56. The outside phase barriers (2-21) and inter-phase barriers (2-35) can be removed by simply withdrawing them from the top of breaker. On replacement make sure that the barriers are fully inserted and set in their respective locating slots.

ARC-CHUTE ASSEMBLY (Fig. 2 & 8)

57. When removing an arc-chute assembly, remove the phase barriers adjacent to that particular phase, lift off top section of arc-chute tube, remove barrier stack, disconnect blowout coil leads from front and rear bushings, and then lift out lower section of arc-chute tube.

CAUTION: ON INSTALLING MAKE SURE BLOWOUT COIL LEADS ARE FASTENED SECURELY.

BARRIER STACK (Fig. 2 & 8)

58. For replacing an arc-chute barrier stack remove top section of arc-chute tube as outlined in Paragraph 57 and lift out barrier stack. On installation make sure that the barrier stack is inserted with the "Vee" shaped slots toward the bottom of the chute.

FRONT AND REAR ARC RUNNERS AND BLOWOUT COILS (Fig. 8)

59. Should it be found necessary to replace an arc runner, remove the top section of the arc chute tube and barrier stack as outlined in Paragraphs 57 and 58. Then after the blowout coil leads have been disconnected from the bushings lift out the lower section of the arc-chute tube, remove side plate (8-239) and remove screws holding arc runners (8-232) in place, remove blowout coil (8-246), then remove coil and connected arc runner. To reassemble reverse procedure.

FLASH PLATES (Fig. 8)

60. Should it be found necessary to replace a flash plate, remove top section of arc-chute tube, barrier stack, lower section of arc-chute tube, blowout coils and arc runners as described in Paragraphs 57-59, and the desired side of the lower arc-chute tube. The flash plate may then be unfastened from the support plate. To reassemble reverse procedure.

ARCING CONTACTS (Fig. 7)

61. To remove the stationary arcing contact remove phase barriers and arc-chute assembly as described in Paragraph 57, and the adjusting screw (7-214) in the arcing contact. The contact may then be pushed from its slot. To reassemble reverse the procedure and adjust contact as outlined in Paragraphs 28 & 29 making sure that all connections are made, springs in place, and fastenings secure. Care should be taken to insure that spacer (7-217) is in place between arcing contact (7-213) and spring (7-202).

MAIN CURRENT CARRYING CONTACTS (Fig. 7)

62. To remove the main current carrying contacts, remove the phase barriers and arc-chute assemblies as outlined in Paragraphs 57-58. Remove the bakelite cover plates (7-203) from the front contact block, after which the contact fingers can be pushed from the retaining slot. On replacement make sure springs, spacers, and contact fingers are in proper relationship and free of binds and that all connections are made and fastenings secure.

DISCONNECT CONTACT ARMS (Fig. 9)

63. The disconnect contact arms are fastened to the rear stud by means of a bolt and stover lock nut and may be removed by removing the bolt (9-290) and inner bearing tube (9-289). Care should be taken on reassembly to set the hinge joint pressure as described in Paragraph 30. The arcing contact (9-282) may be removed from the disconnect arms by removing the two screws (9-281) holding it in place.

MAGNETIC BLOWOUT PLATES (Fig. 8)

64. The magnetic blowout cores (8-251), right and left hand, front and rear, are bolted to the outside of the top section of the arc-chute tube and may be removed by unfastening guide (8-261) from tube after it has been removed from the breaker.

BUSHING ALIGNMENT (Fig. 2)

65. Proper bushing alignment is of extreme importance for the easy and exact mating of primary contacts as the movable portion is raised into service position in the cubicle. Bushings have been jig aligned with greatest care at the factory prior to shipment. If the occasion arises in the field where alignment of bushings has to be disturbed such as for replacement of bushing studs, support insulators, etc., re-alignment will have to be done by taking exacting measurements with reference to view showing bushing locations on Fig. 2.

66. When it is necessary to remove or disturb a front bushing for replacement purpose, the rear bushings should not be disturbed in any manner in order that they can be used for reference points when taking measurements for alignment. The reverse is true when a rear bushing has to be replaced or disturbed.

67. After bushings have been properly aligned and secured the movable portion should be raised slowly into position in cubicle and the centering of finger contacts in stationary tubes observed. If misalignment is noted, the movable portion should be removed from cubicle, bushing alignment checked, and corrections made.

FRONT BUSHING STUD (Figs. 2 & 7)

68. When it is found necessary to replace a front bushing stud (7-219), remove the phase barriers and arc-chute assemblies (Refer to Paragraphs 56 & 57) from all phases for ease of access.

CAUTION: WHEN REMOVING A FRONT BUSHING STUD DO NOT DISTURB THE FRONT OR REAR BUSHING PLATES AS REAR BUSHINGS MUST BE HELD IN CORRECT POSITION FOR PROPER ALIGNMENT OF FRONT BUSHING AFTER REPLACEMENT.

69. To remove a front bushing stud (7-219), first remove primary contact fingers (1-3) from phase being replaced, and remove bushing tube (7-220) and cap screw (7-221). The stud may now be lifted clear of support insulator (7-201) and removed through the side or the top of the breaker.

70. With the bushing assembly on a bench remove the arcing and main contact fingers as described in Paragraphs 61-62 to assemble parts on new bushing stud. Refer to Fig. 7 and reverse procedure for dismantling.

71. For installation of bushing assembly in breaker refer to Fig. 2 and reverse procedure outlined in Paragraphs 68 & 69.

72. Align bushings and contacts in accordance with Paragraphs 65 thru 67 and Paragraph 26. Refer to cut in Figure 2 for dimensions.

73. Make sure all fastenings and connections are secure and finally install arc-chute assemblies (2-34) and phase barriers (2-21 and 2-35).

FRONT BUSHING SUPPORT INSULATOR (Fig. 2)

74. To remove a front bushing support insulator (7-201), first remove arc chute and phase barriers from all phases. Next remove operating arm (2-22) from phase being worked on. After removing cap screw (7-221) the front stud assembly may be raised clear of insulator, permitting insulator to be removed. Shims under insulator must not be lost. Replacement will be made easier if the exact location of the insulator is marked before it is removed.

75. To install bushing support insulator (7-201) reverse procedure outlined in Paragraph 74 and align in accordance with Paragraphs 65 thru 67 and 26, using the same thickness of shims as was removed from insulator. Make sure all fastenings and electrical connections are secure.

REAR BUSHING STUD (Figs. 2 & 9)

76. For the removal of a rear bushing stud (9-283) remove the phase barriers (2-21 and 2-35), arc-chute assembly (2-34) as outlined in Paragraphs 56-57.

CAUTION: WHEN REMOVING A REAR BUSHING STUD DO NOT DISTURB THE FRONT BUSHING TOP PLATE AS FRONT BUSHING MUST BE HELD IN CORRECT POSITION FOR PROPER ALIGNMENT OF REAR BUSHING AFTER REPLACEMENT.

77. Remove primary contact finger (1-3) and then remove rear bushing tube (9-284) by lifting it up over stud, remove top plate (2-32). Disconnect the operating arm (2-22) from contact arm (9-277, 9-278) by taking out pin (2-23) remove bolt (9-293) on phase from which stud is to be removed, loosen bolts (9-293) on other two phases so that bushings can be tilted forward to permit bottom plate (2-28) to clear top of breaker frame, and then lift out through top of breaker, the rear bushing stud, movable contact, and bottom bushing plate as a unit.

78. With the rear bushing stud assembly on a bench, first remove plate (2-28) from stud, next remove contact arms (9-277, 9-278) from stud by taking out cap screws (9-290) to free spring washers (9-287), and finally withdraw tube (9-289) to free contact arms.

79. The assembly of the contact arms on stud is obvious. However, do not tighten nut on cap screw (9-290) at this time. Place bottom plate (2-28) over stud and as a unit install stud, movable contact and plate in breaker. Bolt stud to support bushing (use washers (9-292) if breaker is 1200 ampere size) but do not make up tight. Install top plate (2-32) and bushing tube (9-284) but do not make bolting secure. Connect up movable contacts and connecting rod by means of pin (2-23).

80. Using the front bushings as an index align the rear bushings as outlined in Paragraphs 65-67 and make all fastenings secure. Contact alignment must be checked in accordance with Paragraph 26. Install arc-chute assemblies and barriers, operate breaker with maintenance closing handle and electrically and finally check breaker in cubicle.

REAR BUSHING SUPPORT INSULATOR (Figs. 2 & 9)

81. For the removal of a rear bushing support insulator (9-276) remove phase barriers and arc-chute assemblies as outlined in Paragraphs 58 and 59.

82. Remove cap screw (9-293) from phase from which support insulator is to be removed, back out cap screws fastening insulator to breaker frame, freeing support insulator, and then work insulator toward back of breaker until free of support angle, pull downward until tongue on insulator is free of stud and withdraw from breaker. Do not lose or mislay shims used under insulator.

83. The installation of the new support insulator is obvious. However make sure that the same number of shims are used under new insulator as was removed from under old one. Secure insulator in place using cap screws and the necessary shims and spacer bar. Bolt bushing stud and support insulator together with cap screw (9-293) (use spacers (9-292) if breaker is 1200 ampere size). Check alignment of rear bushings as outlined in Paragraphs 65-67 and check for contact alignment as outlined in Paragraph 26. Make all fastenings secure and install arc-chute assemblies and phase barriers.

CLOSING COIL (Figs. 2 & 3)

84. To remove the closing coils (3-106) the breaker should be blocked up at least 10 inches off the floor to facilitate the removal of coils through bottom of breaker frame. The phase barriers (2-21 and 2-35) and arc-chute assemblies (2-34) for all phases should be removed for working clearance. For removal of above parts refer to Paragraphs 56 and 57.

85. Remove the bolts (3-107) on plate (3-111) and bracket (3-110), disconnect coil leads, undo wrapping binding leads together, bend metal tabs provided to prevent coil rotation into hole in shell for coil leads, take hold of tape loops on coil and withdraw first coil section, then withdraw second section of coil.

86. On replacing coils the first coil section must be installed with the lead end of coil facing back of breaker and when in place, the leads are to be pulled through opening in coil housing. Next the cork washer (3-108) is positioned. Leads of the second coil section must be pushed through the hole in the shell and then the coil slipped on over the end of the brass tube. Cut leads to length, connect them to terminal block, wrap leads together and then pull coil tabs through hole and bend tabs over the outside of shell to prevent coil rotation. Install cork washer (3-108) between coil and back plate and bolt back plate and bracket securely in position. When bolting plate in position make sure that the shell is fitted into the groove in the plate.

TRIP COIL - SHUNT TRIP (Fig. 3)

87. To remove a trip coil (3-80) from shunt trip application, remove the bracket (3-76) by taking out the two screws (3-82), withdraw the tripping unit assembly (3-81), disconnect coil leads and remove coil. Replacement is obvious. However, make sure that trip coil spacers (3-79) are in position on bottom of coil, that tab on coil is

in slot of spacers and that all fastenings and coil connections are secure.

Allis-Chalmers Mfg. Company
Boston Works
Boston, Mass.

SEPTEMBER, 1952

RETYPED MARCH, 1955

RECOMMENDED SPARE PARTS LIST
FOR
TYPE AM-150C RUPTAIR MAGNETIC BREAKER

Fig. No.	Item	Description	Quantity Per Brkr.	Recommended Stock for 1 Brkr.	Recommended Stock for 5 Brkrs.
1	2	Grounding Contact Fingers	1	1	1
1	3	Primary Contact Fingers	6	2	6
1	6	Control Relay (With Coils (Specify Voltage)	1	1	1
2	21	Outside Phase Barrier	2		2
2	35	Inter Phase Barrier	2		2
2	22	Operating Arm	3	2	4
3	80	Trip Coil (Specify Voltage)	1	1	2
3	89	Trip Latch	1	1	1
3	106	Closing Coil (Specify Voltage)	2	2	2
3	120	Limit Switch	1	1	3
3	120	Latch Check Switch	1		
7	201	Support Insulator (Front)	3	1	3
7	208	Main Contacts	18	18	18
7	213	Arcing Contact	3	3	6
7	219	Stud	3	1	3
7	220	Tube	3	1	3
8	231	Barrier Stack	3	1	3
8	232	Arc Runner	3	3	3
8	250	Arc Runner	3	3	3
8	236	Blowout Coil Front	3	1	3
8	245	Blowout Coil Rear	3	1	3
8	242	Flash Plate	6	2	6
9	276	Support Insulator (Rear)	3	1	3
9	277	Disconnect L.H.	3	1	3
9	278	Disconnect R.H.	3	1	3
9	279	Main Contact	3	1	3
9	282	Arcing Contact	3	3	6
9	283	Rear Stud	3	1	3
9	284	Bushing Tube	3	1	3
9	285	Contact Ring	6	2	6
9	287	Spring Washer	12	4	12
10	340	Operation Counter	1	1	1
10	345	Stationary Contact (Assembled)	16	4	8
10	341	Rotor (Assembled)	8	2	4

NOTE: REFER TO PARAGRAPHS 52-54 FOR INSTRUCTIONS ON HOW TO ORDER SPARE PART ITEMS.

LIST OF ILLUSTRATIONS FOR INSTRUCTION BOOK BWX-6347-3 TYPE AM-150C RUPTAIR MAGNETIC BREAKER

FIGURE	DESCRIPTION
1	Typical "HJ" Movable Portion
2	Typical Ruptair Magnetic Breaker Assembly
3	Typical Solenoid Operator Assembly
4, 5, & 6	Typical Operator Linkage Diagrams for Type AM-150C Magnetic Breaker
7	Typical Front Bushing and Contact Assembly
8	Typical Arc-Chute Assembly
9	Typical Rear Bushing and Disconnect Contact Assembly
10	Typical Auxiliary Switch and Plugging Device Assembly
11	Typical Puffer Assembly

missing
Figure
#1

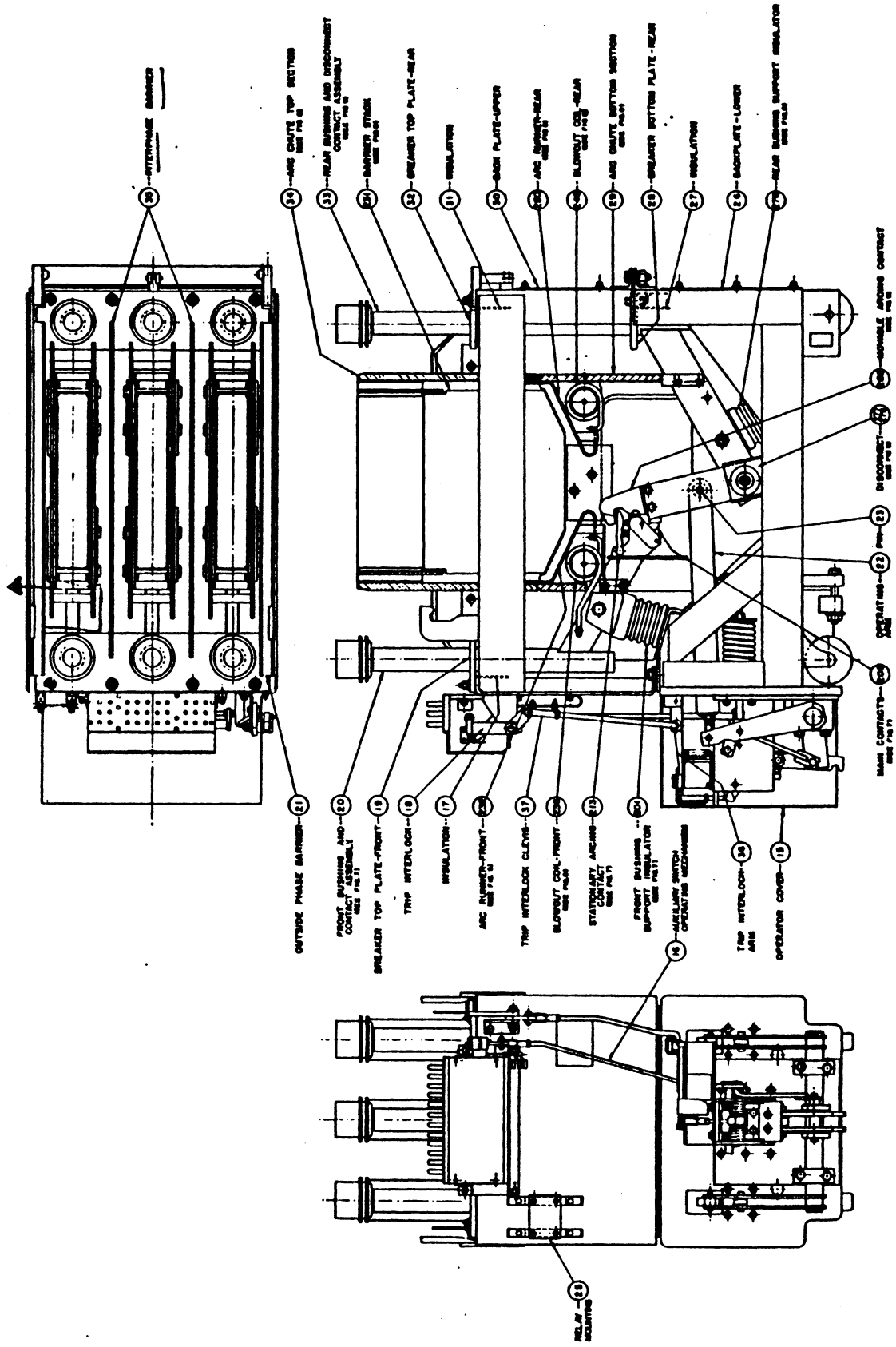

FIG. 2

TYPICAL RUPTAIR MAGNETIC BREAKER ASSEMBLY

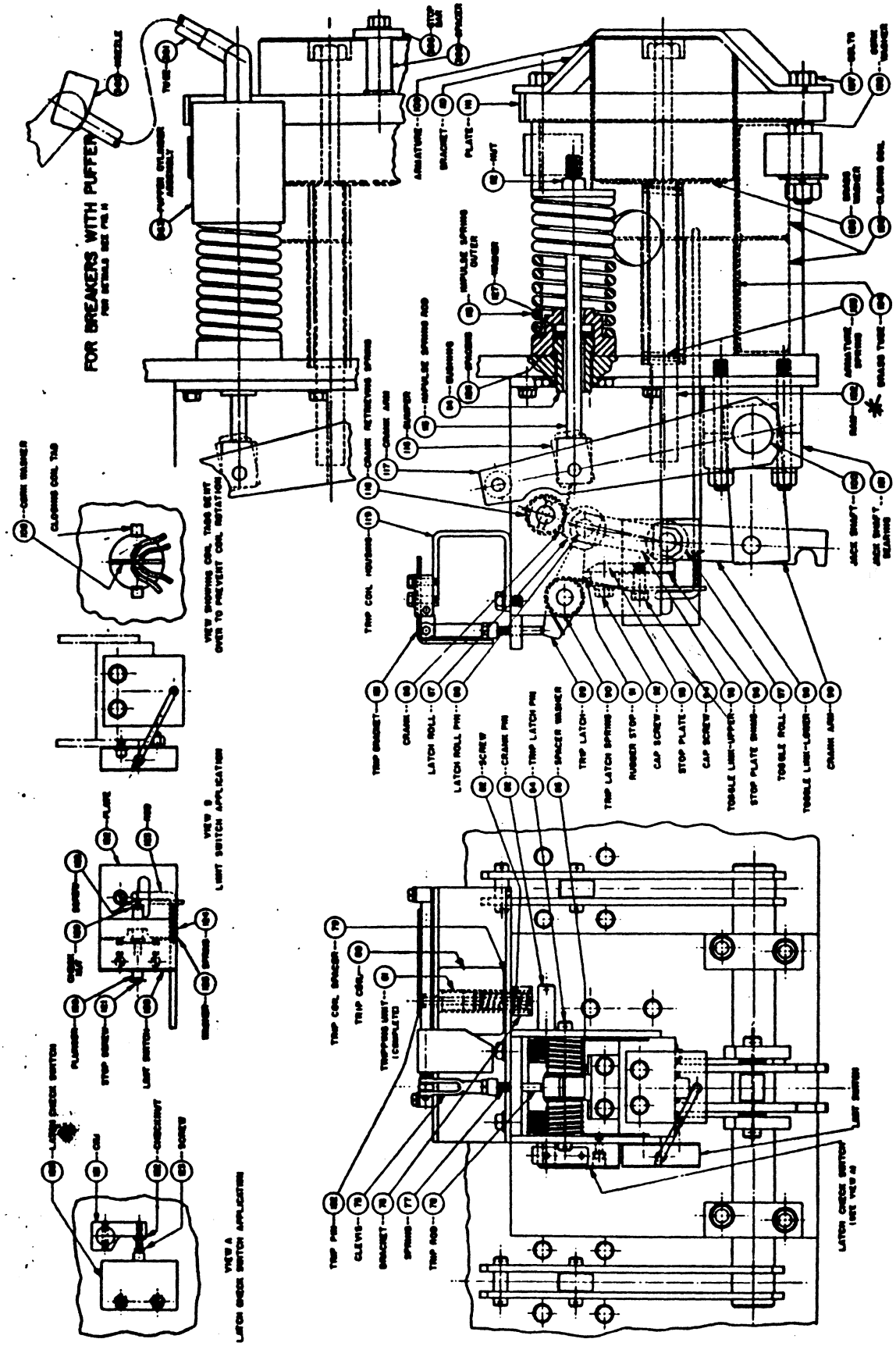

FIG. 3
TYPICAL SOLENOID OPERATOR ASSEMBLY

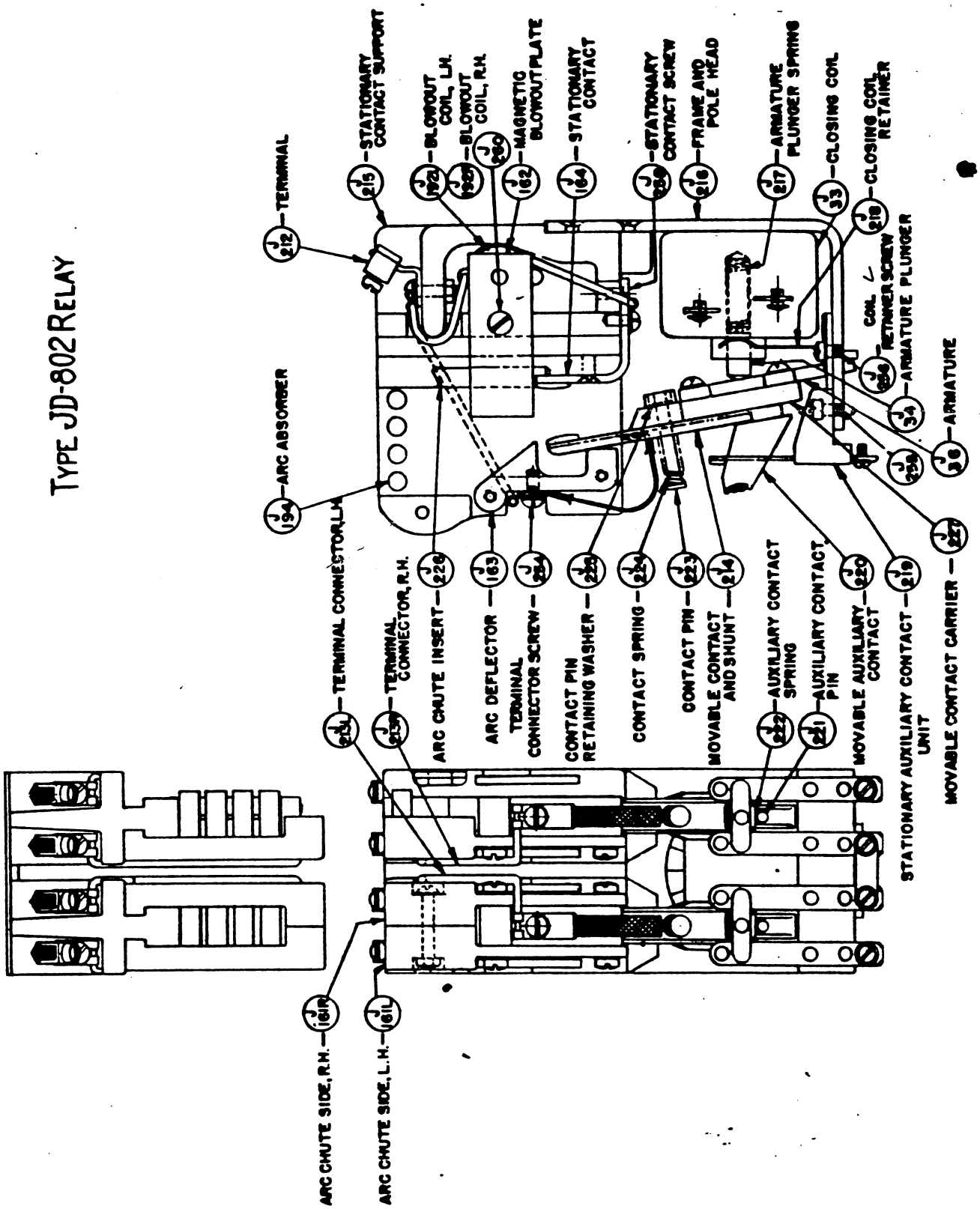

Illustration CBX-624

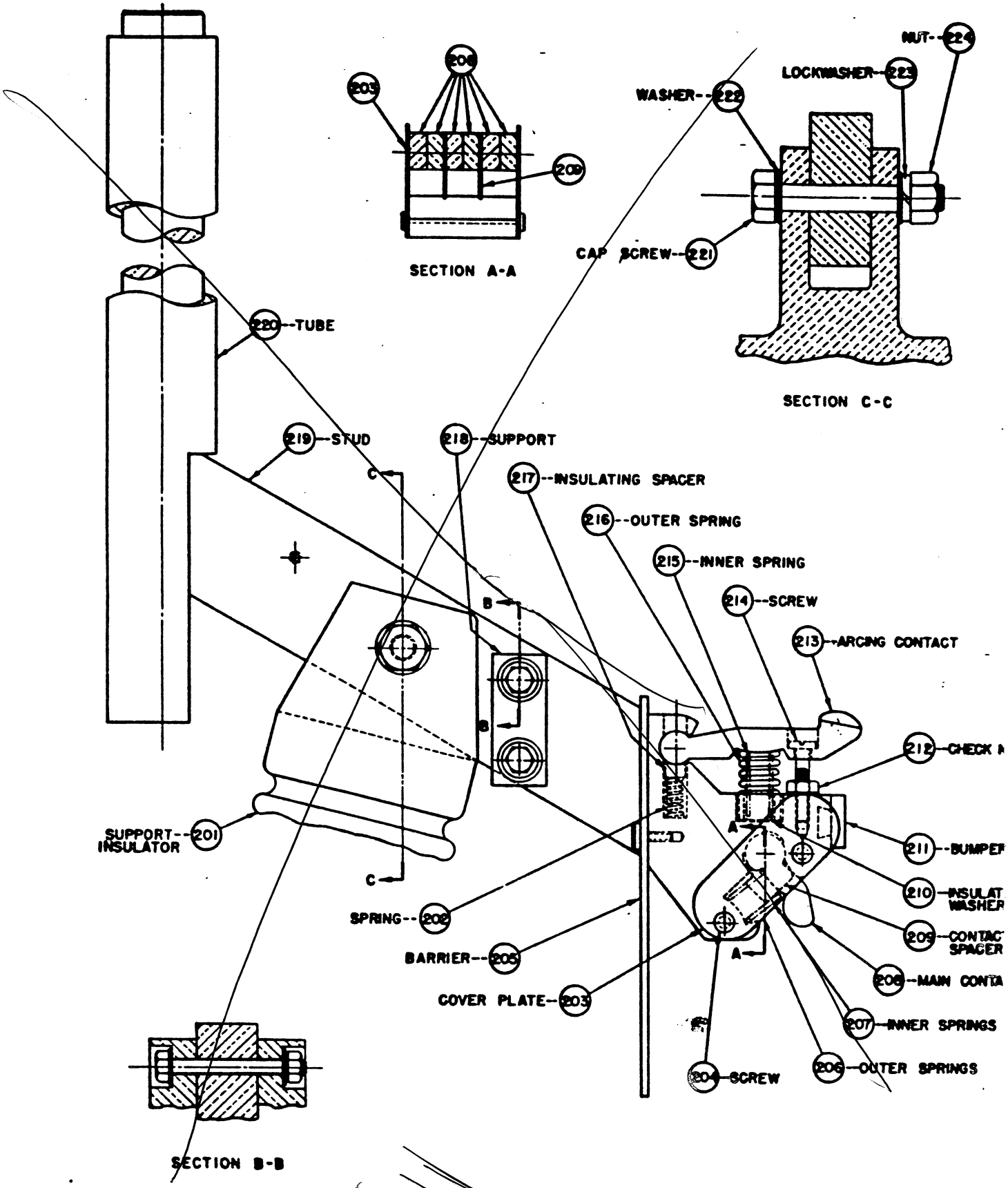

FIG. 7

TYPICAL FRONT BUSHING AND CONTACT ASSEMBLY

NOVEMBER 14, 1952 71-400-019

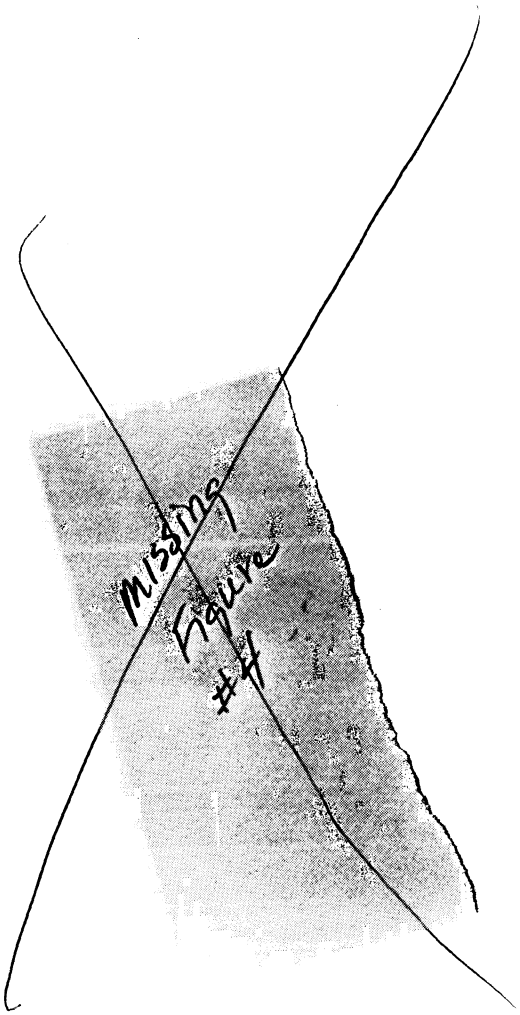
Missing
Figure
#4

Missing
Figure
#5

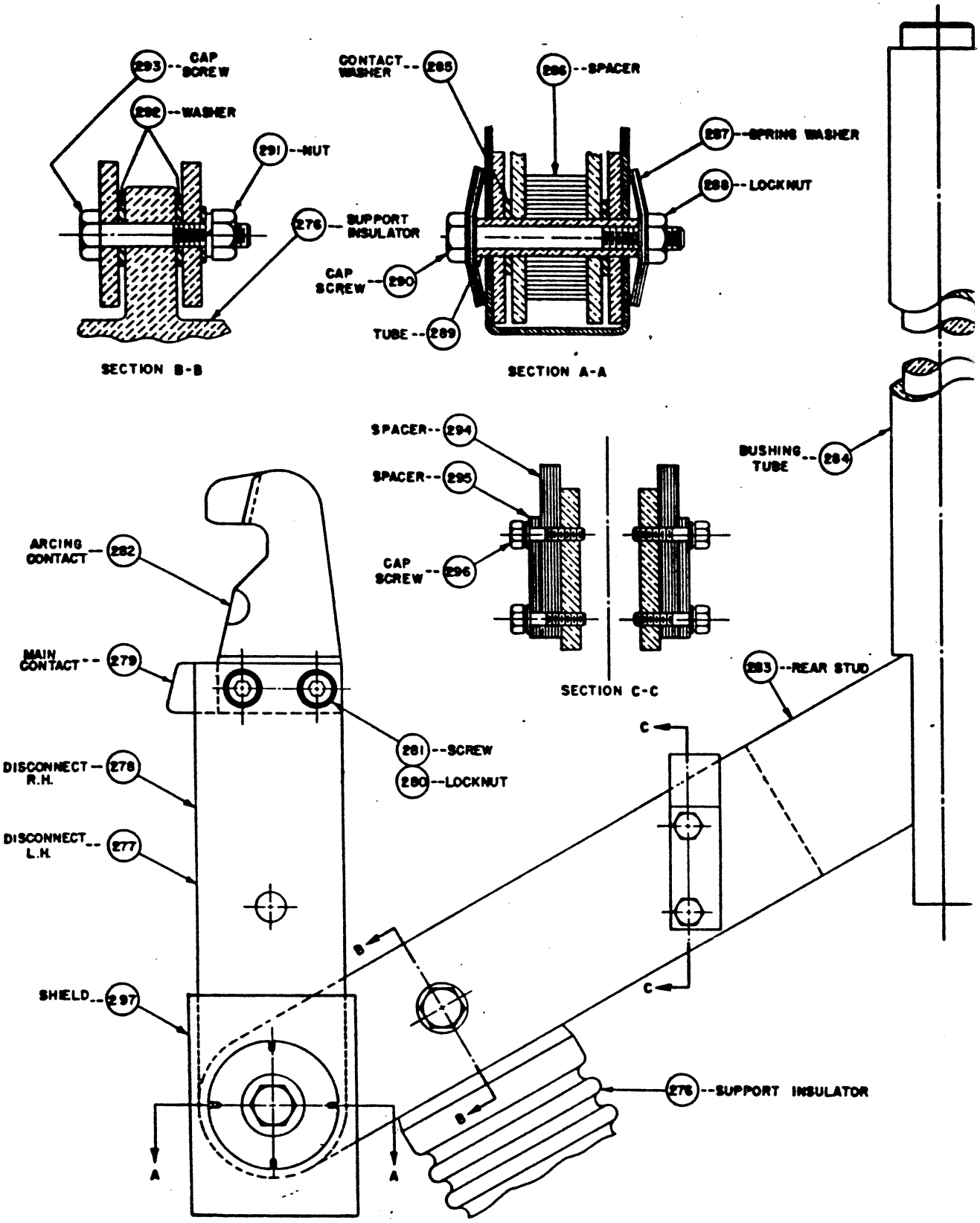

FIG. 9

TYPICAL REAR BUSHING AND DISCONNECT CONTACT ASSEMBLY

NOVEMBER 7, 1952 71-400-014 MK.401

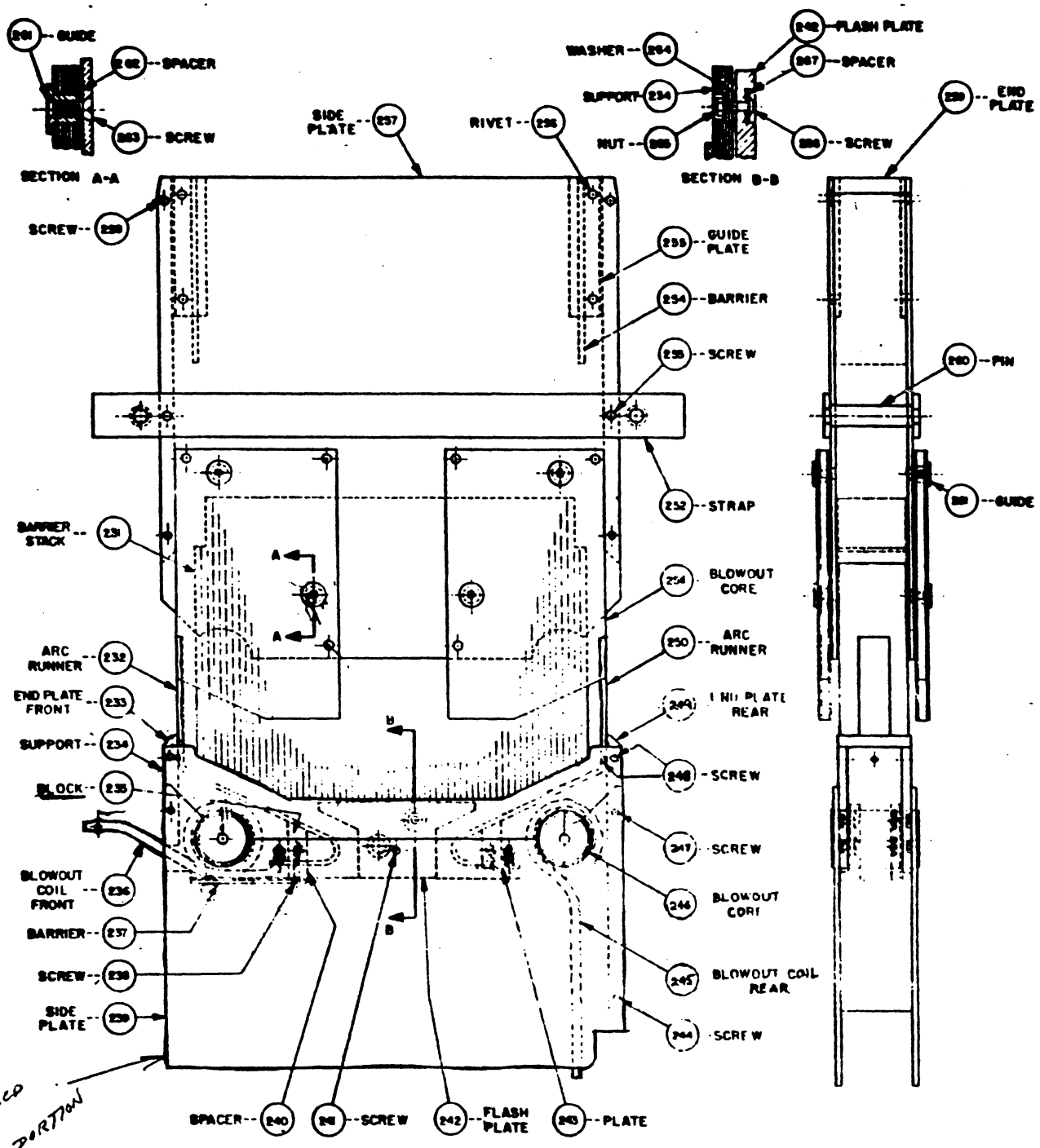

RED OUTLINED AREA - LOWER PORTION

FIG. 8

TYPICAL ARC-CHUTE ASSEMBLY

9-4-52

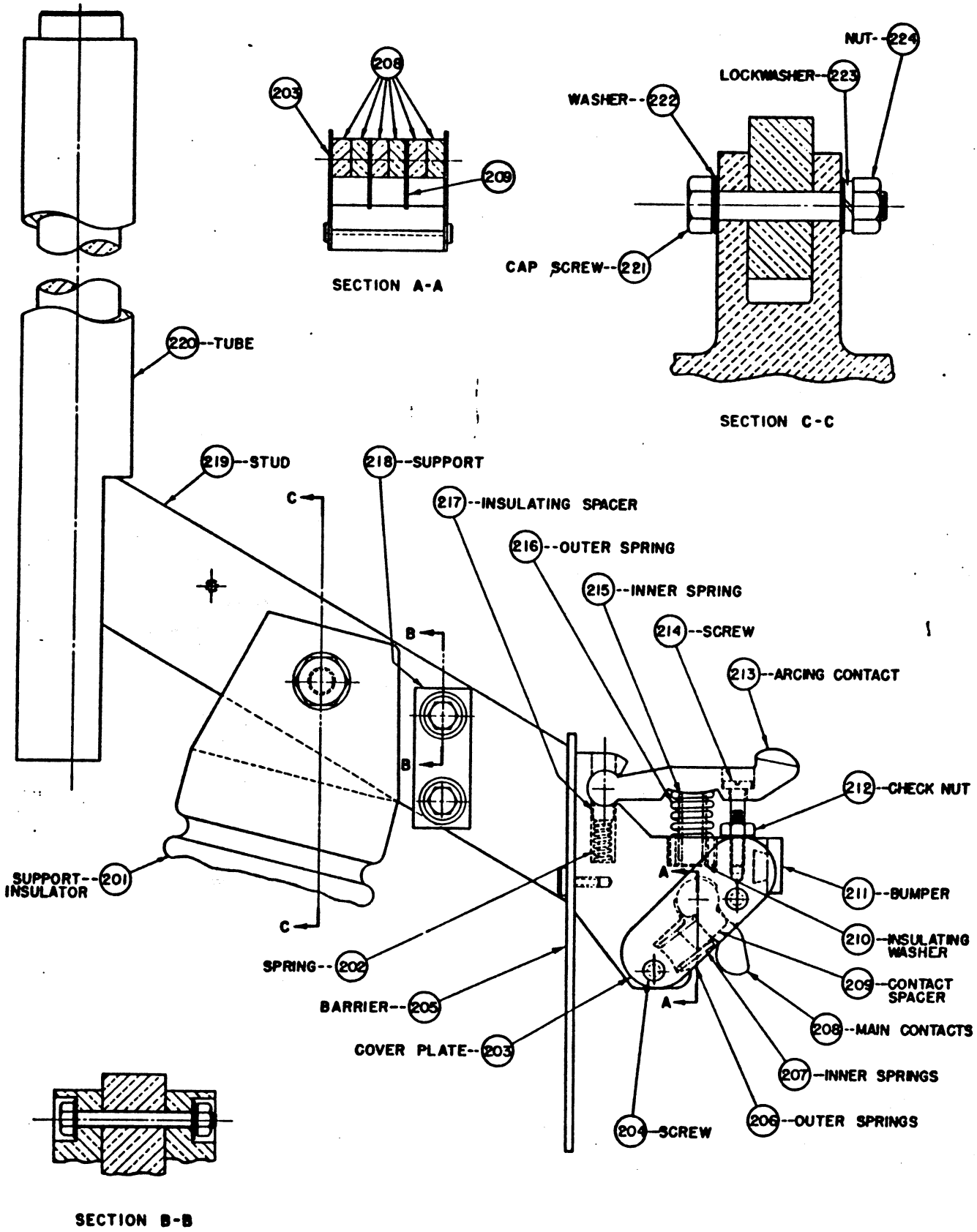

FIG. 7

TYPICAL FRONT BUSHING AND CONTACT ASSEMBLY

NOVEMBER 14, 1952 71-400-019

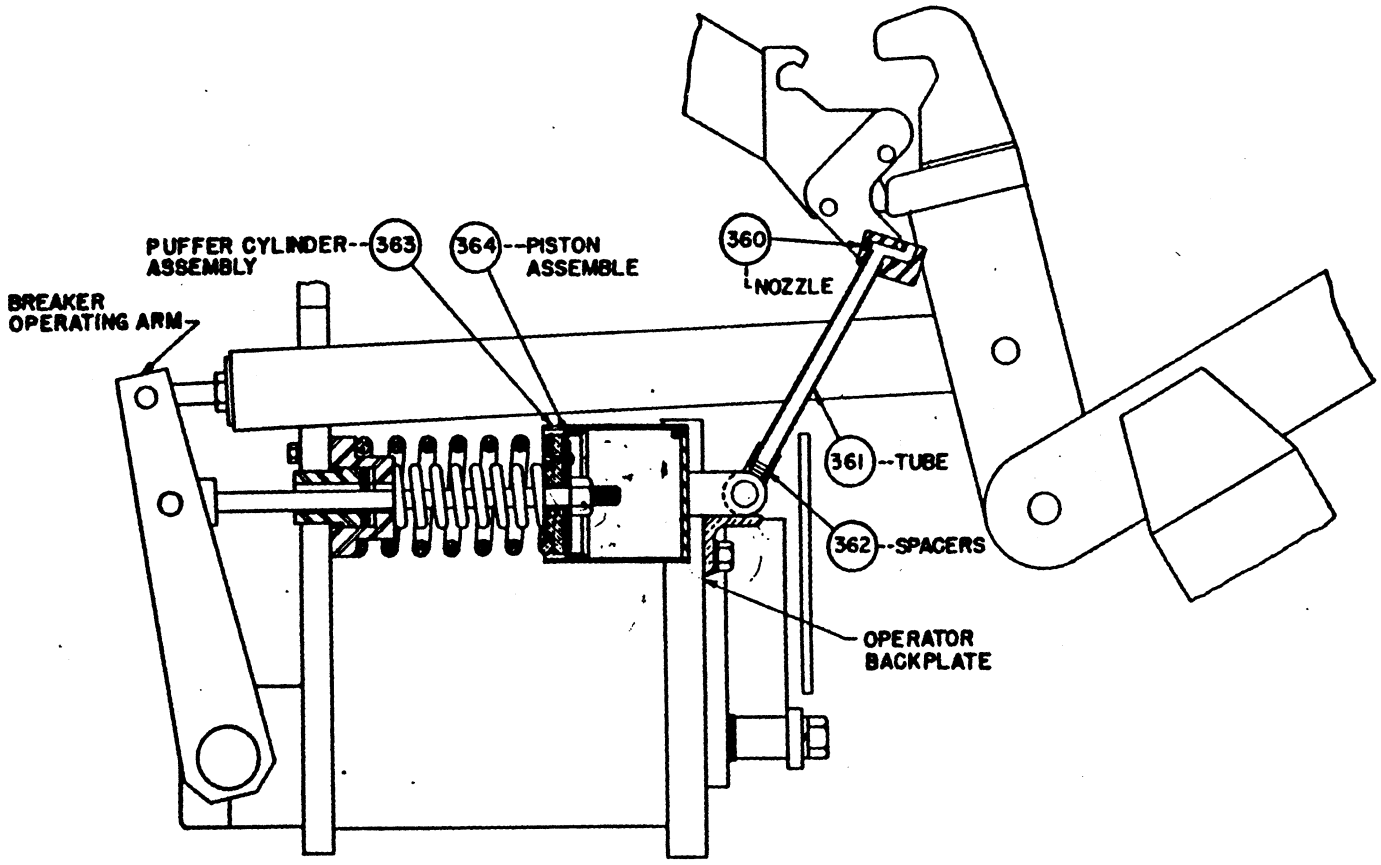

FIG. 11
TYPICAL PUFFER ASSEMBLY

DECEMBER 2, 1954 71-300-819