REMOTE CONTROL STATIONS

FIG. B

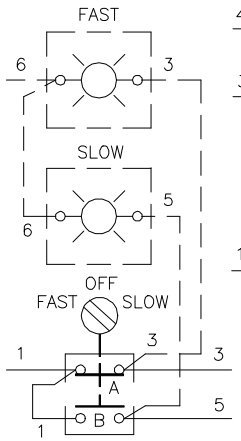

FIG. C

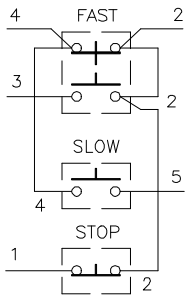

CONTACT	POSITION		
	FAST	OFF	SLOW
A	X		
B			X

X = CONTACT CLOSED

FIG.1

MOTOR CONNECTIONS

CONSTANT HORSEPOWER MOTOR

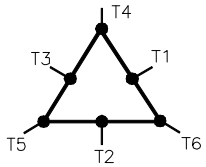

SPEED	CONNECT LINES L1	L2	L3	TOGETHER
	TO MOTOR TERMINALS			
SLOW	T1	T2	T3	T4, T5, T6
FAST	T6	T4	T5	

SEPARATE CONTROL

REMOVE WIRE "C" WHEN IT IS SUPPLIED. CONNECT SEPARATE CONTROL LINES TO THE NO. 1 TERMINAL ON THE REMOTE CONTROL STATION AND THE NO. 96 TERMINAL ON 2OL OVERLOAD RELAY.

FRONT VIEW OF PANEL

CONTACTORS "F" AND "S" ARE MECHANICALLY INTERLOCKED.

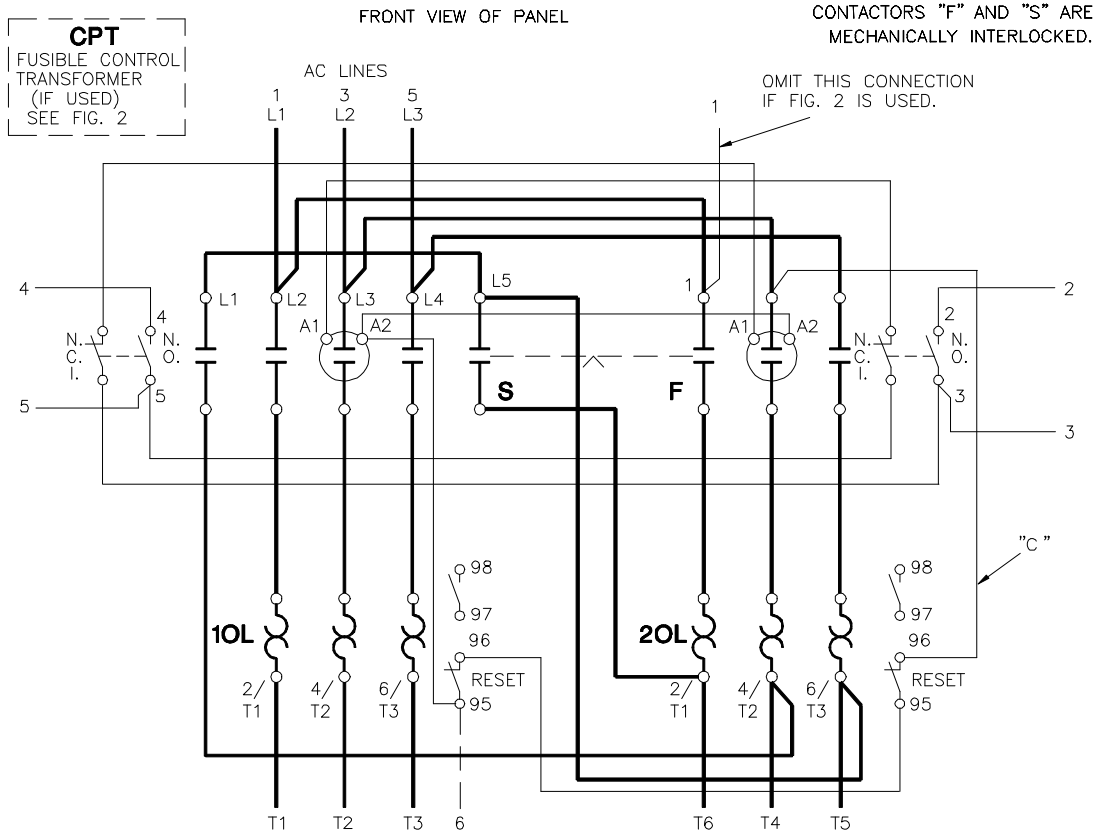

STARTER ELEMENTARY DIAGRAM

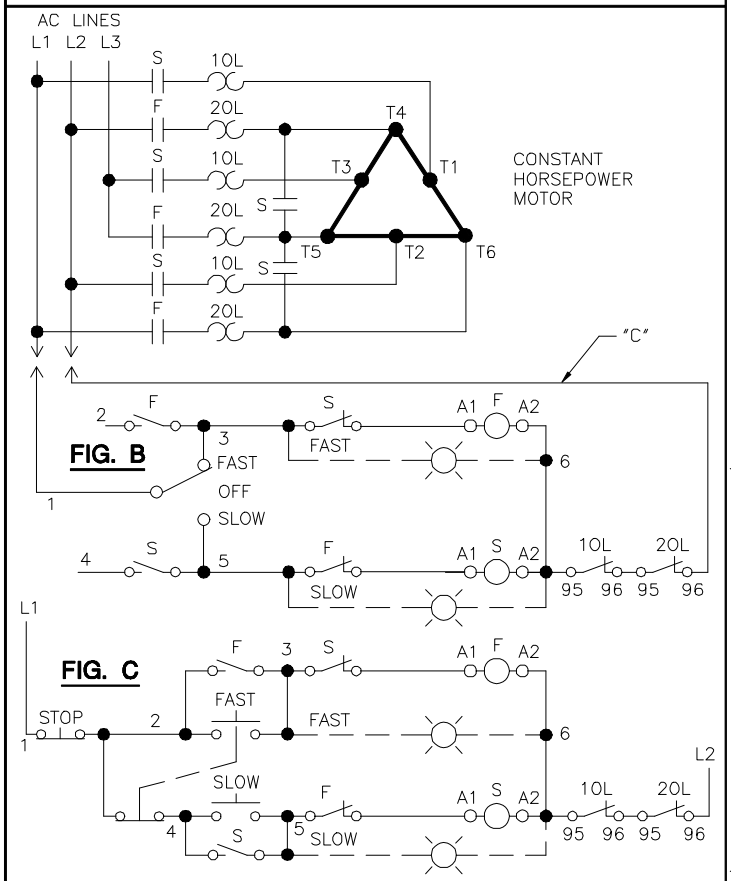

FIG. 2 CONTROL CIRCUIT TRANSFORMER (IF USED)

REMOVE WIRE "C" IF SUPPLIED AND CONNECT AS SHOWN BELOW. (ALL OTHER WIRING REMAINS AS SHOWN IN FIG. 1).

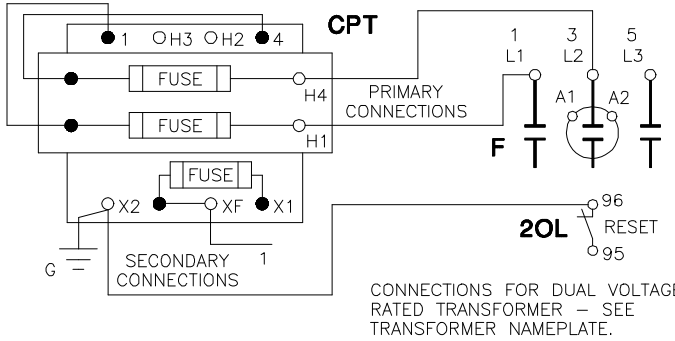

CONNECTIONS FOR DUAL VOLTAGE RATED TRANSFORMER – SEE TRANSFORMER NAMEPLATE.

CONNECTIONS FOR FREEDOM MULTISPEED STARTER – 2 SPEED, 1 WINDING – CONSTANT HORSEPOWER NEMA SIZE 1 & 2 – FORM 1 RECONNECTABLE WINDING.

	APPROVAL	WIRING CHANGED INTERNAL	EXTERNAL					
				DRAWN BY	M.A.GOSKOWICZ	10-30-96	ENGR. APP. G.J.HENDERSON	11-7-96
A	J.H.J. 3-19-97	NO	NO	CHECKED BY	G.J.HENDERSON	11-7-96	SUPR. APP. F.R.BONESS	11-7-96
B				SUP. NO.				
C				SUP. BY NO.				
D				PANEL NO.				
E				BUL. NO.				
F				GROUP NO.				
G				ORDER NO.	DV120-1131			

Cutler-Hammer EATON

261045 D3

COMPUTER GENERATED TRACING – .DWG

FILE IN H-65

THE INFORMATION ON THIS DRAWING IS THE PROPERTY OF EATON CORPORATION, IS DISCLOSED IN CONFIDENCE AND IS NOT TO BE REPRODUCED, USED OR DISCLOSED EXCEPT FOR THE PURPOSE FOR WHICH FURNISHED.

FORM 42B