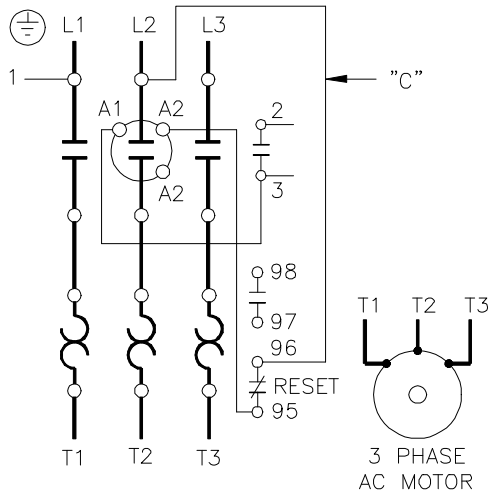

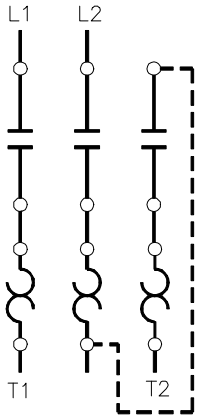

FIELD CONVERSION TO 1 PHASE – ADD DOTTED CONNECTION.

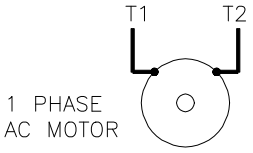

REMOTE PILOT DEVICES

2 WIRE CONTROL

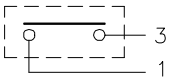

NOT FOR USE WITH AUTO RESET OL RELAYS.

WHEN MORE THAN ONE PUSHBUTTON STATION IS USED OMIT CONNECTOR "A" AND CONNECT PER SKETCH BELOW.

3 WIRE CONTROL

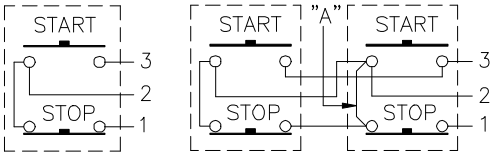

SEPARATE CONTROL

REMOVE WIRE "C" WHEN IT IS SUPPLIED. CONNECT SEPARATE CONTROL LINES TO THE NO.1 TERMINAL ON THE REMOTE PILOT DEVICE AND THE TERMINAL 96 ON THE OVERLOAD RELAY.

NEMA SIZE "0" NON–REVERSING STARTER.

	APPROVAL	WIRING CHANGED INTERNAL	WIRING CHANGED EXTERNAL					
				DRAWN BY M. STEHLING	5–7–86	ENGR. APP. E.M.WAGNER	5–21–86
A	E.W. M.F.S. 9–30–86	YES	NO	CHECKED BY		SUPR. APP. F.R.BONESS	5–22–86
B	J.R.R. D.M.R. 8–21–90	NO	NO	SUP. NO.		Cutler-Hammer EATON	
C	J.H.J. 4–14–94	NO	NO	SUP. BY NO.			
D				PANEL NO.			
E				BUL. NO.		255775 D1	
F				GROUP NO.			
G				ORDER NO. DV13–1697–10		COMPUTER GENERATED TRACING – .DWG	

THE INFORMATION ON THIS DRAWING IS THE PROPERTY OF EATON CORPORATION, IS DISCLOSED IN CONFIDENCE AND IS NOT TO BE REPRODUCED, USED OR DISCLOSED EXCEPT FOR THE PURPOSE FOR WHICH FURNISHED.