INSTRUCTIONS

for the Installation, Care and Operation of Circuit Breakers and Accessories

Return to Customer

TYPE LA-25

AIR CIRCUIT BREAKER

BOOK BWX-6426

These instructions are not intended to cover all details or variations that may be encountered in connection with the installation, operation, and maintenance of this equipment.
Should additional information be desired contact the Allis-Chalmers Mfg. Company.

ALLIS-CHALMERS MFG. CO.

BOSTON WORKS · BOSTON · MASS.

ALLIS-CHALMERS MANUFACTURING COMPANY

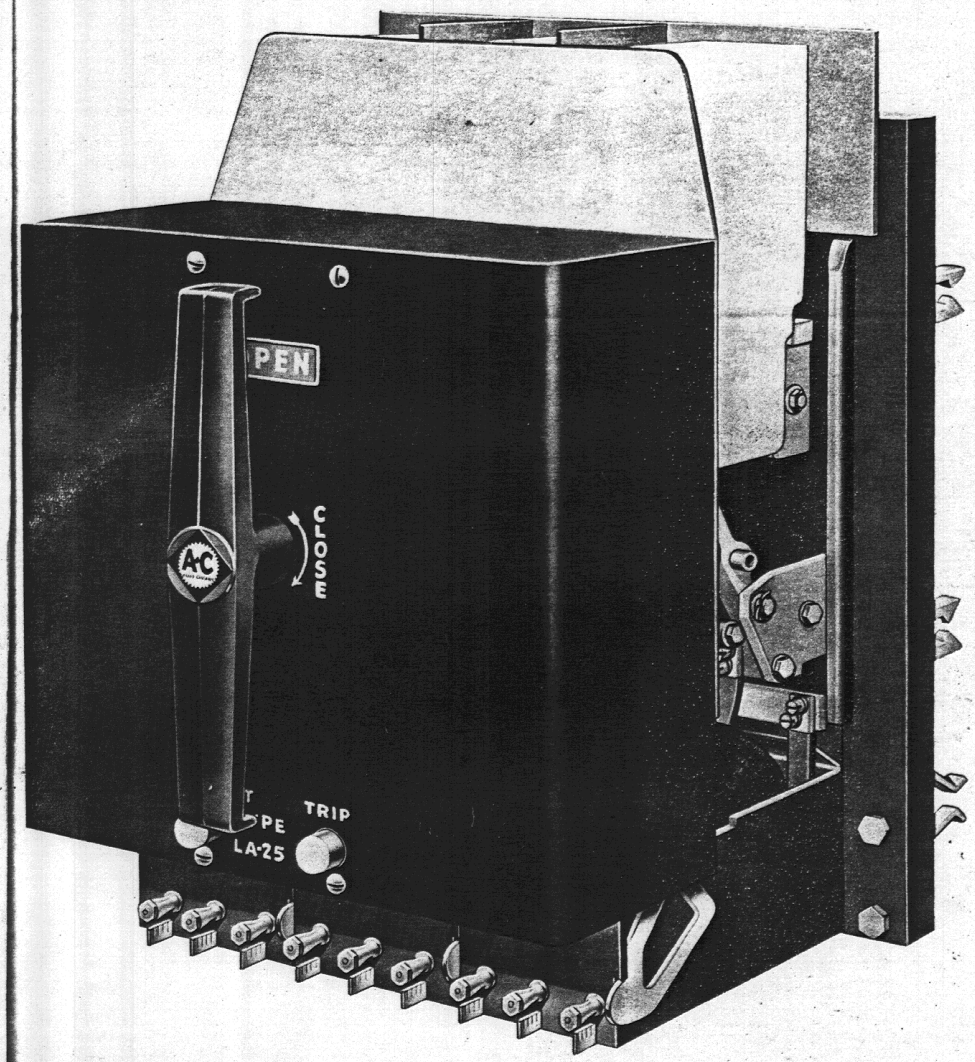

LA-25 low voltage air circuit breaker

178603

ALLIS-CHALMERS MANUFACTURING COMPANY

INDEX TO INSTRUCTION BOOK
COVERING
TYPE LA-25 AIR CIRCUIT BREAKER

Contents | Page No.

Part I. General Information

A.	Introduction	1
B.	Warranty	1
C.	Receiving and Inspection for Damage	1
D.	Storage	1

Part II. Installation and Operation

A.	Mounting	2
B.	Inspection	2
C.	Operating Mechanism Check	3
D.	Trip Units and Accessory Devices	3
E.	Pantograph and Trip Interlock Adjustment	3
F.	Energizing the Breaker	4

Part III. Description and Function of Parts

A.	Operating Mechanism	4
B.	Contacts	5
C.	Method of Arc Interruption	6
D.	Relays	6
E.	Trip Units and Accessory Devices	7

Part IV. Maintenance, Adjustment and Replacement

A.	General	7
B.	Periodic Inspection	7
C.	Maintenance Check List	7
D.	Movable Arcing Contact	9
E.	Stationary Arcing Contact	9
F.	Movable Main Contact	10
G.	Stationary Main Contact	10
H.	Trip Units and Accessory Devices	10
I.	Operating Mechanism (Manual)	10
J.	Operating Mechanism (Electrical)	11
K.	Closing Coil	11

Contents (Cont'd.) Page No.

Part V. Protective Devices

A. Series Overcurrent Trip Device Assembly Adjustment and Calibration 11
Inspection and Adjustment 13
Maintenance and Replacement 13
B. Thermal Magnetic Overcurrent Trip Device Assembly 14
Inspection and Adjustment 15
Maintenance and Replacement 16
C. Overcurrent Trip Flag Indicator and Reset 16

Part VI. Accessory Attachments

A. Shunt Trip Attachment 16
B. Auxiliary Switch Attachment 17
C. Bell Alarm Switch Attachment 17
D. Mechanical Overcurrent Lockout Attachment 17

ALLIS-CHALMERS MANUFACTURING COMPANY

LIST OF ILLUSTRATIONS
COVERING ALLIS-CHALMERS TYPE LA-25
LOW VOLTAGE AIR CIRCUIT BREAKER
AND AUXILIARY EQUIPMENT

FIGURE	DESCRIPTION
1	Electrically Operated Breaker
2	Manually Operated Breaker
3, 4, & 5	Operating Mechanism (Schematic)
6	Wiring Diagrams
7	Auxiliary Switch
8	Secondary Disconnect
9	Closing Solenoid
10	Limit Switch
11	Shunt Trip Device
12	Series Trip Device
13	Thermal Trip Device
14	Indicator Flag, Mechanical Lockout, Bell Alarm Switch, and Reset Button For Overcurrent Trip Devices
15	Series Trip Curves (Dual Magnetic)
16	Series Trip Curves (Dual Selective)
17	Thermal Trip Curves
18	Undervoltage Trip Device

ALLIS-CHALMERS MANUFACTURING COMPANY

CAUTIONS TO BE OBSERVED
IN THE INSTALLATION AND OPERATION
OF THE LA-25 AIR CIRCUIT BREAKER

1. DO NOT ATTEMPT TO OPERATE BREAKER OR INSERT IN CUBICLE UNTIL ALL PACKING TRACES HAVE BEEN REMOVED. BREAKER IS SHIPPED LOCKED IN CLOSED POSITION.

2. READ INSTRUCTION BOOK BEFORE MAKING ANY CHANGES OR ADJUSTMENTS ON THE BREAKER.

3. DO NOT INTERCHANGE PARTS OF TRIP DEVICES - TO DO SO MAY CHANGE CALIBRATIONS.

4. ALWAYS OPERATE MANUAL CLOSING HANDLE QUICKLY AND DECISIVELY - TO HESITATE IN MID-STROKE MAY CAUSE UNDUE BURNING OF CONTACTS.

5. CHECK CURRENT RATINGS AND SERIAL NUMBERS AGAINST SINGLE LINE DIAGRAM TO ASSURE THAT BREAKERS ARE PROPERLY LOCATED IN SWITCHGEAR AT INSTALLATION.

BWX-6426

INSTRUCTIONS
FOR THE INSTALLATION AND OPERATION
OF
ALLIS-CHALMERS TYPE LA-25
LOW VOLTAGE AIR CIRCUIT BREAKER
AND
AUXILIARY EQUIPMENT

PART I
GENERAL INFORMATION

A. Introduction. The type LA-25 air circuit breaker is one of a line of low voltage air breakers which may be used in metal enclosed switchgear, on open type switchboards, or separately mounted in individual housings. The LA-25 air circuit breaker has an interrupting capacity of 25,000 amperes and a maximum continuous current rating of 600 amperes at 600 volts, 60 cycles. For information on other frequencies, the factory should be consulted. All LA-25 breakers are completely assembled, tested, and calibrated at the factory in a vertical position and must be so installed to operate properly. Customers primary connections should be adequately braced against the effects of short circuit currents to prevent overstressing the breaker terminals.

B. Warranty. Allis-Chalmers LA-25 air circuit breakers are warranted to be free of defects in material and workmanship for a period of one year after delivery to the original purchaser. This warranty is limited to the furnishing of any part which to our satisfaction has been proven defective. Allis Chalmers will not in any case assume responsibility for allied equipment of any kind.

C. Receiving and Inspection for Damage. Each LA-25 air circuit breaker and its associated apparatus is carefully checked, inspected, and packed at the factory by workman experienced in the proper handling of electrical equipment. Immediately upon receipt of this equipment, carefully remove all packing traces and examine parts, checking them against the packing list and carefully noting any damages incurred in transit. If such is disclosed, a damage claim should be filed at once with the transportation company and Allis-Chalmers notified. Keep instruction books and tags with the breakers.

D. Storage. When breakers are not to be put into immediate use, they should be carefully wrapped or covered to provide protection from plaster or concrete dust and other foreign matter. Abrasive dust in the breaker can cause excessive friction and rapid wear. Breakers should not be exposed to the action of corrosive gases and moisture. In areas of high humidity or temperature fluctuations, space heaters or the equivalent

should be provided. Circuit breakers should be handled carefully at all times. Shock or jars in rough handling can cause serious damage.

PART II
INSTALLATION AND OPERATION

A. Mounting. The LA-25 air circuit breaker is completely adjusted, tested, and inspected at the factory before shipment and no additional adjustment should be necessary when installing. However, a careful check should be made to be certain that shipment and storage has not resulted in damage or change of adjustment (See next paragraph). Circuit breakers should be installed in a clean, dry, well-ventilated place in which the atmosphere is free from destructive acid or alkali fumes. Mount open type breakers high enough to prevent injury to personnel either from circuit interruption or from moving parts during automatic opening of the breaker. Allow sufficient space to permit access for cleaning and inspection. Also allow a minimum clearance of one inch to an insulating barrier above the breaker to prevent damage from arcing.

B. Inspection. Before being placed in service the breaker should be given a final inspection to be certain that adjustments and connections have not loosened in shipment or handling. Before installing breaker, make certain it is in the open position and that all packing traces have been removed (breaker is shipped blocked in the closed position). After breaker is in position, close it manually to check proper functioning of the mechanism and contacts. (CAUTION: MAKE SURE CIRCUIT IS NOT ENERGIZED) Breaker should operate smoothly with increasing resistance until fully closed and latched. During the closing operation, observe that the contacts move freely without interference or rubbing between movable arcing contacts (2-24) and parts of the arc chute (2-21). Continue to close and observe that the arcing contacts (2-24) and (2-25) touch before the main contacts (2-34) and (2-33). Observe that when main contacts touch that there is a positive wiping action which will produce a clearance at the bottom of the contacts.

NOTE: - Refer to Part IV, Paragraph C, Maintenance Check List, for values of adjustments and settings.

Check to be sure that springs are not solidly compressed. Arcing contact springs (2-22) and main contact finger springs (2-32) and (2-37) in particular should have overtravel to insure against hard closing and overstressing of the breaker parts.

Observe that the manual operating handle (2-13) returns rom closed to neutral positions automatically by action of its eturn spring (2-9).

Next open breaker by means of manual trip button (2-1) n front of breaker. The toggle linkage (2-53) will collapse, he contacts will move to the open position freely and rapidly, nd the closing mechanism will reset, ready for the next operation. perating springs (2-4) assist in rapid opening of the contacts nd actuate the resetting of the closing mechanism.

C. Operating Mechanism Check. The operating mechanism s properly adjusted and tested at the factory, and ordinarily here should be no need for readjustment in the field. If, for ome reason, the mechanism fails to latch in the closed position, heck to be certain that all trip devices are reset and not nterfering with the trip latch (2-43). The trip latch should be ree to return to its latching position. If the trip latch is ree and the mechanism still fails to latch, check to be certain hat there are no binds or interferences in the mechanism and hat all links and latches are fully reset. If breaker is still nstable, the trip latch reset spring (2-42) may be adjusted to ncrease its reaction against the latch (refer to Maintenance heck List, Part IV, Section C). However, before changing any djustments be certain that the trip latch engagement is suffiient, as outlined in the maintenance check list.

D. Trip Units and Accessory Devices. These items also hould receive a thorough check prior to placing breaker in ervice to be certain that adjustments are proper and parts are ot damaged. Refer to Parts V and VI of the instruction book for he description of adjustments and functions of these devices.

E. Pantograph and Trip Interlock Adjustment. This pplies only to cubicle mounted breakers of the drawout type. s a closed breaker is racked into position it should trip shortly fter it passes the "test position" indicator. At this point the ontrol circuits will be made, but the primary connections will be pen, and it will be impossible to close the breaker until it eaches the "operating position" indicator. Continue racking reaker in and close it when the operating position is reached. losing should not be affected by the interlock mechanism. Then, s the closed breaker is racked out towards the test position, fter approximately 5/16 inches travel the breaker should trip. t this point, disconnect fingers (1-14) will still be in full ontact with the stationary stud, and it will be impossible to lose the breaker again until the test position is reached. If he mechanism does not function as described, refer to the cubicle nstruction book for corrective adjustments.

F. Energizing the Breaker. After completion of the installation inspection, the breaker is ready to be energized. The breaker and its compartment should be clean and all foreign material removed. Control wiring should be checked and insulation tested. The drawout type breaker may be racked into position in the cubicle and the stationary type may be mounted in its permanent location. Once the breaker is energized it should not be touched, except for operating, since most of the component parts are also energized.

PART III
DESCRIPTION AND FUNCTION OF PARTS

A. Operating Mechanism. Refer to Figs. 3,4,5. The operating mechanism transmits power from the solenoid operator or the manual closing lever to the contact structure to close the breaker. It is a trip-free mechanism; that is, the breaker contacts are free to open at any time if required, regardless of the position of the mechanism or the force being applied to it. The manual and solenoid operators are exactly the same, differing only by the addition of an electrically operated solenoid assembly and accessories.

Fig. 5 shows the breaker in the open position. Closing force is applied either by rotation of cam (12) through action of manual closing lever (10), or by action of solenoid plunger (8). In either case, link (13) is rotated counterclockwise about fixed center (E). The cam face on link (13) acts against cam roll (22), moving it to the right, and thus rotating link (14) clockwise about temporarily fixed center (D). This action moves link (15) to the right, thus closing breaker contacts (3) and (4) by clockwise rotation about fixed center (F). When the full closed position is reached, link (19) moves counterclockwise about temporarily fixed center (D) and locks link (13) in the operated position to maintain the breaker closed as shown in Fig. 3. The solenoid plunger (or manual closing lever) may now return to the neutral position.

Opening of the breaker contacts is accomplished by the releasing of trip latch (5). Refer to Fig. 3. Trip latch (5) is rotated clockwise about center (A) by action of various trip devices or the manual trip button. Trip levers (6) and (7) are thus released and permitted to rotate clockwise about centers (B) and (C) respectively. Temporarily fixed center (D) is now released and free to move to the right, permitting the force of the stationary main contact springs, springs (21), and springs (20) to move link (14) counterclockwise about cam roll (22) as a center. Thus link (15) will move to the left and open the breaker contacts

(3) and (4). When the mechanism reaches the open position, link (13) is released from link (19) and the mechanism is reset by spring (20) to the open position as shown in Fig. 5.

Fig. 4 shows the mechanism in the trip-free position. Since latch (5) and levers (6) and (7) are released, center (D) is not temporarily held as in a normal closing operation. Thus when link (13) rotates counterclockwise, spring reaction holds center (23) fixed and link (14) rotates counterclockwise about center (23). Thus, although link (13) goes through its complete stroke, link (15) does not move and the breaker contacts will not close. This action can take place during any part of the closing stroke, causing contacts to immediately return to the open position even though the solenoid remains energized or the manual closing stroke is completed.

B. Contacts. The contacts on the LA-25 breaker consist of main current carrying contacts and arcing contacts. They are arranged such that contact make and break is by means of the arcing contacts, while the main contacts are not subjected to arcing. Arcing contact surfaces are clad with a silver tungsten arcing alloy which greatly reduces mechanical wear and arc erosion. The positive wiping action of the arcing contacts, as well as the properties of the contact material, prevents welding and sticking when interrupting high currents. This insures long satisfactory service.

Another feature of the contact structure is the "blow-on" effect produced by the physical configuration of the moving member. This is best shown schematically as in Fig. 5. The current path, when main contacts only are parted, is from the arcing contact (5-3) to pivot point (I), and thence completely around the loop of the main contact to pivot point (F). The mechanical forces produced by current flowing in such a path tend to hold the arcing contacts solidly in contact, both in opening and in closing, and thereby prevent premature or uncontrolled contact parting or bounce. Both the stationary and the movable arcing contacts have arc runners which lead the arc away from the contact surfaces. This prolongs contact life as well as aiding arc interruption.

The main current carrying contacts are silver plated for good conductivity over long periods of time. A positive wiping action also facilitates high conductivity and insures that the actual current carrying areas are maintained smooth and clean and free from pitting or hammering. When the main contacts make, the first point of contact is at the lower end of contact finger (2-33). Further motion causes this contact finger to rotate in its socket, causing the contact point to move up towards the "knee" of the contact, and separating the initial contact point.

Another set of fingers (2-51) similar to the stationary main fingers eliminates the need for a current carrying movable hinge joint. These fingers are always in contact and take no part in the operating sequence of the breaker. They too are silver plated and spring loaded to maintain a high conductivity at all times.

C. Method of Arc Interruption. When the breaker is called upon to interrupt a current, the main contacts (2-34) (2-33) separate, transfering the current to the arcing contacts (2-24) (2-25) without arcing. The "blow-on" effect previously described holds the arcing contacts solidly in contact until the desired parting time. When the arcing contacts part an arc is drawn between the silver tungsten contact surfaces. Due to the inherent magnetic and thermal effects of the arc, it will rapidly move upwards along the arc runners and into the arc chute (2-21) where it is extinguished. Each assembly consists of a double arcing contact group, each group working in a separate chamber in the arc chute. This permits two parallel arcs to be drawn on each phase of the breaker, thereby reducing the current density of each arc and making it easier to extinguish the arcs. The chambers in the arc chute are so vented into each other as to provide a uniform dielectric condition in order for the arc to divide into the two parallel paths. In addition to easing arc interruption, the double contact arrangement aids in prolonging arcing contact longevity.

D. Relays. Relays are used on electrically operated breakers to control the closing power to the operating mechanism and to permit remote or automatic operation of the circuit breaker. Two relays are used. The X relay (1-4) is energized by the control switch, or other means, to connect the closing coil to the control power source. A seal in contact prevents partial operation and insures that a closing operation will be carried to completion even though the control switch may be opened quickly. The Y relay (1-7) acts as a cut-off relay to deenergize the X relay at the proper time. It is energized by the aa switch and seals in through the X seal in contact and the control switch. (The aa switch (Fig. 10) is a mechanically operated contact which closes when the solenoid approaches the completion of the closing stroke.) When the Y contacts close, the X relay and closing coil are deenergized, but the Y relay will remain energized as long as the control switch is held closed. This prevents "pumping" or repeated attempts to close. The control switch must be opened before another closing attempt is possible. The closing coil and the X relay coil are designed for intermittent duty and must not be permitted to remain energized any longer than is necessary to close the breaker. The XY relay scheme accomplishes this automatically. Fig. (6) shows a typical wiring diagram. Although variations may be necessary, or other control elements added, to suit a specific application, the basic XY relay arrangement will usually be as described.

E. Trip Units and Accessory Devices. Description and function of these items are covered in Parts V and VI of the instruction book.

PART IV
MAINTENANCE, ADJUSTMENT, AND REPLACEMENT

A. General. Occasional checking and cleaning of the breaker will promote long and troublefree service. Oiling and greasing should be done with care because excess oil and grease tend to collect dirt which in time might make operation sluggish and affect the dielectric strength of insulating members. Always refer to the instruction book before removing parts or changing adjustments. A recheck of the installation inspection (Part II) during maintenance will indicate the overall general condition of the breaker.

B. Periodic Inspection. A periodic inspection and servicing should be included in the breaker maintenance routine. A semi-annual inspection is usually sufficient, however, in cases where unfavorable atmospheric conditions exist, more frequent inspections are recommended. In any case, the total number of breaker operations between servicing should not exceed 1750 for the LA-25 breaker. The maintenance check list (Section C) will provide a ready and convenient guide to a thorough and understanding inspection of the breaker. Servicing will be facilitated if a tag is attached to each unit listing date, operation counter reading, date of next inspection, counter reading at next inspection, and serviceman's signature.

C. Maintenance Check List. The following items are listed for convenience in maintaining the equipment in the best possible condition. By periodically checking and maintaining these items, the breakers will provide the continued satisfactory service of which they are capable.

1. Cleaning. Remove all dust, dirt and foreign material. Wipe off excess oil and grease. Wipe down insulation. Clean cam faces, latch rolls and latch faces. Make certain that dirt or oxidized grease is not interfering with moving parts.

2. Connections. Check all hardware for tightness. Check for loose wiring connections and broken or abraided insulation.

3. Contacts. Check main contacts for cleanliness and permanence of silver plating. (Main contacts should not be dressed.) Check arcing contacts for wear and arc erosion. Contacts should be replaced if arcing alloy shows indications of wearing

through before next inspection. Arcing contacts should also be replaced if, with arcing contacts (2-24) and (2-25) just touching, a 1/8" dia. rod cannot be passed between stationary contact fingers (2-33) and movable main contact (2-34).

4. Lubrication. Needle bearing are packed with a special lubricant and should need no further attention. Bearing pins and other sliding or rotating areas should be wiped with a light film of "Aero Lubriplate" (made by Fisk Co.). Lubrication should not be applied excessively and must be kept off insulating members, as it may affect dielectric ability and cannot be satisfactorily removed.

5. Contact Adjustment. Arcing contacts (2-24) (2-25) do not require adjustment. Main contacts (2-33) (2-34)are factory adjusted and should not require field adjustment unless parts have been disassembled. Adjustment is obtained by use of shims (2-18) between the operator frame (2-15) and the breaker frame (2-26). Main contacts are in proper adjustment when there is a clearance of 1/64" to 1/16" between the bottom of the stationary main contact (2-33), and the face of the movable main contact (2-34), with the breaker full closed. All contact fingers (2-33) should be in contact at the "knee" of the contact and open at the bottom. Be certain that there is aftertravel in springs (2-32) with the breaker full closed.

6. Arcing Contact Hinge Tension. Spring washers (2-57) should be compressed to a height of .038" ± .002" as measured with feelers between washers (2-58) and flat side of arcing contact (2-24).

7. Trip Latch Adjustment. Trip latch (2-43) should have a tripping force of 2 to 3½ oz. as measured at right angles to a 3/4" radius (pulling in line with the centerline of screw (2-41) will fulfill this condition). Force may be changed by positioning slotted end of spring (2-42) - clockwise to decrease tripping force, and counterclockwise to increase the tripping force.

Trip latch (2-43) engagement on secondary trip lever (2-44) roll should be 3/16" ± 1/16". Measurement is from the leading edge of trip latch face to the line of contact on the latch face. Adjustment is obtained by positioning screw (2-41) to vary the angular position of trip latch (2-43). Trip latch roll on screw (2-41) may have up to 1/32" clearance to trip block (2-48) as long as the trip latch engagement is maintained.

8. Manual Closing Lever Overtravel Stops. Two overtravel stop screws (2-12) are provided. The one to the right of manual closing cam (2-10) is set to stop the manual closing lever (2-13) in its vertical position and is set visually. The left hand stop screw limits travel in the closed position and is set

to provide 1/32" to 1/16" clearance between prop latch (2-2) face and pin on main closing cam (2-5) when the hand closing cam (2-10) is against the overtravel stop screw.

9. Reset Button. The reset button (14-6) is adjusted to provide 1/16" to 1/8" clearance between reset lever (14-10) on the breaker and trip device reset lever (14-17) with the reset shaft (14-1) on the trip device in the tripped position.

10. Operation Counter. The operation counter (2-11) when supplied is actuated by the open-close indicator (2-14) and is adjusted such that the counter arm has some overtravel when breaker is open.

11. Limit Switch. With breaker in closed and latched position, the upper contacts (10-8) (10-9) of limit switch (10-3) should have 1/32" follow-up after contact make. Adjustment is by use of shims (10-7) between switch and mounting pad.

12. Closing Solenoid. The closing solenoid (Fig. 9) is mounted on the operating mechanism frame (2-15) and pinned in position. Should readjustment ever be necessary, the solenoid is to be positioned and repinned such that with the solenoid armature (9-13) tight against the pole head (9-5) to hold the breaker closed, the main closing cam (9-1) will have 1/8" clearance to its overtravel stop (9-10), and the prop latch (9-6) face will have 1/16" clearance to the prop latch pin (9-7). After securing the solenoid mounting screws (9-4), and drilling four letter "F" (.257" dia.) holes for the locking pins (9-11) but before inserting pins, check breaker open position. There should be 1/32" to 1/16" clearance between the end of the armature cam (9-8) and the cam pins (9-9). If adjustment is necessary, remove solenoid and rotate solenoid armature stop (9-14) as necessary and lock with set screws (9-15), after which the solenoid is replaced on the breaker and pinned in place. Note that redrilling for locking pins is not necessary for normal reassembly - only when adjustments require changing.

D. Movable Arcing Contact. The movable arcing contact (2-24) may be replaced, after removing arc chutes (2-21) and phase barriers (2-20), by removing hardware and spring washers (2-57) at the hinge joint of the arcing contact. In reassembling, make certain that the hinge tension is correct as outlined in Section IV - C-6.

E. Stationary Arcing Contact. The stationary arcing contact (2-25) may be replaced, after removal of arc chutes and phase barriers, merely by removal of screws (2-27) and (2-28). Replacement is obvious and no adjustment is required.

F. Movable Main Contact. The movable main contact (2-34) is best removed as a unit including the arcing contact. The outside contacts must be removed before the center phase contact can be removed. Contacts will be free for removal when the hinge pin is removed. Since the hinge pin is under pressure from the hinge joint contact fingers (2-51), care must be used not to score or damage the pin. In replacing movable contacts be certain that all three phases are lined up on shaft (2-56) to insure smooth operation and freedom from binds.

G. Stationary Main Contacts. To remove the lower main contact block (2-50), first remove movable contact assembly (2-34) as outlined in Part IV - F, then screws (2-49) and (2-36). If desirable, contact block (2-50) and moving contact unit (2-34) can be removed as a group on the outside phases. Then, after removing the main shaft (2-56), the center phase assembly can be removed. To remove upper main contact block (2-30), first remove movable main contact (2-34) as outlined in Part IV - F, then screws (2-31) and (2-27), permitting contact block (2-30) and stationary arcing contact (2-25) to be removed as a group. Once the above members are removed, it is a simple matter to replace contact fingers (2-33) and (2-51). Remove fingers under a cloth or other shield to prevent springs from flying free. A screwdriver may be used to work springs and fingers to the ends of the block for removal. Be careful not to raise nicks or burrs or otherwise damage contact fingers. Note that spring (2-37) consists of a double (inner and outer) spring, while spring (2-32) is a single spring. During reassembly of upper and lower contact blocks there are no particular adjustments to observe, however, alignment between the three phases is important to insure that the main operating shaft (2-56) is free of binds and that the complete assembly works smoothly and easily.

H. Trip Units and Accessory Devices. For maintenance, adjustment, and replacement of these devices refer to Parts V and VI of the instruction book, where detailed instructions will be found.

I. Operating Mechanism (Manual). The manually operated mechanism is fastened to the breaker panel frame by four screws (2-17). Shims (2-18) are used to adjust main contacts (see section IV-C-5) and must not be changed for any other reason. The operator may be removed from the breaker by disconnecting breaker operating link (2-52) and removing four screws (2-17), carefully noting amount of shims (2-18). After reassembly, pay particular attention to trip latch adjustments and main contact adjustments to be certain they have not changed. Check mechanisms for ease of operation and freedom from binds.

J. Operating Mechanism (Electrical). The electrical operating mechanism is exactly the same as the manual mechanism, with the addition of an electrical solenoid and accessories to accomplish the closing operation. The manual closing means is retained, as in the manually operated breaker. The operating mechanism and solenoid can be removed as a unit as described in section IV - I, after disconnecting the closing coil and limit switch leads. Should the solenoid be removed from the operating mechanism, it must be carefully readjusted on assembly as outlined in section IV - C-12. A D.C. solenoid is furnished for use with a direct current control source. When the breaker is to be operated from an alternating current source, an A.C. solenoid is furnished. Thus, rectifiers and aging resistors are not required.

K. Closing Coil. Removal of the closing coil (9-16) requires that the solenoid (Fig. 9) be removed from the breaker. This is accomplished by removing locking pins (9-11) and screws (9-4). With the solenoid removed, the armature stop (9-14) can be removed, (after marking it for replacement at the same setting), permitting the armature to be withdrawn and the coil removed. After replacing coil, mount and adjust solenoid as outlined in section IV - C-12, making sure that all connections are made up tight.

PART V
PROTECTIVE DEVICES

A. Series Overcurrent Trip Device Assembly Adjustment and Calibration. Series overcurrent trip devices used on low voltage breakers function to trip the breaker whenever the current through the breaker exceeds a predetermined value. This device includes a series coil, magnetic circuit with two armatures, and a sealed oil time delay device. This arrangement is varied somewhat on current ratings above 600 amps. on the LA-50, and the LA-75 breakers, in that the trip device coil is not tied to the power contact structure, but is linked to an inductive series coil mounted on the fixed bus in the rear of the breaker. Figure 12 shows the arrangement of the functional components of this device and Figures 15, 16 give the inverse time delay characteristics.

The trip elements available in the various categories of series trip devices are three in number and calibrated in the following ranges.

Long time delay element - for use in combination with the adjustable instantaneous trip and/or the short time delay element. The pick up of the long time delay element is adjustable in the field to 80, 100, 120, 140, or 160% pickup of the

continuous current rating of the trip coil. Calibration settings in excess of 100% do not permit the continuous current rating to exceed 100% of the series coil rating.

Short time delay element - for use in combination with the adjustable instantaneous element and/or the long time delay element on selective trip systems. The pickup of the short time delay element is adjustable in the field to 500, 750 and 1000% pickup of the continuous current rating of the trip coil.

Instantaneous trip element - for use in combination with the long and short time delay elements. The pickup of the instantaneous trip element is adjustable in the field between 500 and 1500% pickup of the continuous current rating of the trip coil.

The series overcurrent trip devices are factory adjusted and calibrated and should not be disturbed in the field without proper equipment and knowledge of the device. The operation of the long time delay element (12-15) is as follows: When the magnetic pull on the armature (12-15) increases sufficiently due to an overcurrent condition in the series coil (12-7), the armature (12-15) will pick up and rotate about shaft (12-4). This magnetic attraction must overcome the tension in the pickup spring (12-20) and also displace the silicone oil in time delay device (12-14) from the lower chamber to the upper chamber through the accurately controlled metering element (12-12). As the armature closes the gap to the core (12-8), it engages trip block (2-48) and trips the breaker. When the breaker has tripped, the armature will reset against stop (12-10) due to tension in pick up spring. Quick reset is provided by means of the check valve (12-13) in time delay device.

The short time delay element (12-18) functions in the same manner as the long time element. The one major difference between the two elements is that the short time delay device (12-19) has a coarser metering element. The time delay devices for the long and short time delay elements are not interchangeable and are clearly marked in that the cover on the long time delay device is red and the short time delay device is green.

The time delay band adjustments for the two inverse time elements are adjustable by locating the plunger (12-1) of the time delay device in the proper mounting hole as marked on the extensions of the trip elements. To decrease time band move plunger location closer to shaft (12-4) of armature and to increase move plunger away from shaft. This relocation of the plunger varies the force applied to the time delay device by changing the lever arm and also changing the stroke required for tripping. Each time band, maximum, intermediate or minimum, is marked by a white band indicating the mounting point for the time delay device plunger. All of the band locations are

progressive and if desired, intermediate settings may be made between the calibrated points for finer selectivity.

The pickup calibration of the armatures is selected by rotating knob (12-2) which moves the calibration label (12-3) to the required setting. Adjustment of the calibration label increases or decreases tension in the pickup spring and is factory calibrated for values of pickup current.

INSPECTION AND ADJUSTMENT

The series trip device should be inspected prior to being put in service to see that the pickup calibration and time delay band selections are in accordance with the application requirements. This device leaves the factory with the following standard settings unless otherwise specified in the purchase order:
Long time delay element is set at 100% pickup on the intermediate time delay band. Short time delay element is set at 750% pickup on the intermediate time delay band.
Instantaneous trip element is set at 800% pickup.
Selections other than those already made to the device do not require further testing in that the unit is completely calibrated at the factory. The current rating of the series coil is stamped on the breaker Nameplates and should be checked in applications involving varied current ratings.

MAINTENANCE AND REPLACEMENT

The individual phase series trip device assemblies are mounted on a common base and must be removed from the breaker for maintenance or replacement as one assembly. To remove this assembly, detach the assembly mounting bolts (2-39), and screws (2-47) and (2-49) holding the series overcurrent coils (12-7) to the contact structure. Having removed the assembly from the breaker, each single phase assembly can then be detached from the common base by the removal of four mounting screws (14-15) and the reset shaft (14-1).

To remove series coil (12-7) which does not require a single phase disassembly, detach the four mounting screws (12-5) holding core assembly (12-8) in place and slide the complete core assembly out of the device. The series coil will then slide off the core leg and can be assembled in the reverse steps. Care must be taken at assembly that the two screws (12-5) holding the core in the assembly next to the armature shaft (12-4) be securely tightened before the other two screws.

To remove time delay devices (12-14) or (19) remove either side plate from the single phase assembly, detach the time delay device plunger (12-1) from the trip armature and slide the device

out of the top of the assembly. The time delay device is a sealed unit which is factory adjusted and cannot be repaired in the field. In like manner, the calibration labels (12-3) are also factory calibrated for values of trip current and calibration label locking screw (12-25) should not be disturbed at any time. Parts of individual devices, such as pickup springs and calibration labels, must not be interchanged between devices, or calibrations will be lost.

The individual armature trip screws (12-9) are factory set in a jig, and should not require adjustment on the breaker. The adjustments of these armature trip screws may be checked by closing the armature to 1/8" air gap at the lower edge of the face of the upper core leg at which point the trip screw should just engage the trip block (2-48).

B. Thermal Magnetic Overcurrent Trip Device Assembly. The thermal magnetic trip device is mounted and functions to trip the breaker in the same manner as the series overcurrent trip device, excepting that the time delay is accomplished by means of a thermal element. This device includes a series coil, magnetic circuit with two armatures, spiral wound bimetallic element, nichrome wire heater coil and a secondary coil. This arrangement varies in the same manner as the series overcurrent device for ratings on the LA-50 and LA-75 which use the series inductive coil (see paragraph A of section V). Figure 13 shows the arrangement of the functional components of this device and figure 16 illustrates the inverse time delay characteristics.

Each thermal magnetic trip device is calibrated and tested prior to leaving the factory and should not be disturbed in the field without proper equipment and knowledge of the device. The thermal magnetic trip armature pickup is adjustable in the field to 80, 100 and 120% pickup of the continuous current rating of the series trip coil. This selection is made by rotating knob (13-6) on the front of the device to the desired calibration setting. The device nameplate (13-4) attached to the front of the device has etched on it the time delay characteristic curves which enables the operator to easily select the proper settings. Calibration settings in excess of 100% do not permit the continuous current rating to exceed 100% of the series coil rating.

The thermal magnetic trip armature (13-19) functions to trip the breaker in the following manner: When an overcurrent condition exists in the series coil (13-12), it causes a similar overcurrent in the secondary coil (13-9) due to the transformer action in the fixed armature (13-16). This overcurrent condition in the secondary coil generates heat to the spiral wound bimetallic element (13-3) by means of the nichrome wire heater coil (13-2) which surrounds this element. The heat generated in the heater coil (13-2) causes the free end of the bimetallic element (13-3) to rotate along with cam (13-5) which is fastened to it. On

overloads, the rotation of cam (13-5)is sufficient to release the thermal trip armature (13-19) which was previously restrained by roller (13-7) working against this cam. Upon being released, the thermal armature rotates on shaft (13-10) so as to close the air gap through which it is electromagnetically attracted to the core assembly (13-13). As the thermal armature (13-19) closes this gap, it picks up and engages the trip block (2-48) at trip screw (13-14) and acts to trip the breaker as previously described in section III - A of the operating mechanism. The breaker having tripped, the core assembly (13-13) is no longer energized which allows the thermal armature to be returned to its latched position by return spring (13-18). A short time interval may be required to completely reset cam (13-5) after trip cycle is completed due to cooling of bimetallic element.

Because of the inherent long time delay of this device it is equipped with an instantaneous trip armature (13-21) which provides high-overload protection. This instantaneous trip armature is factory set so as to trip the breaker whenever there is an overload of 8 to 12 times normal coil current.

Trip screw (13-14) on thermal trip armature (13-19) is removed for those applications which require the thermal armature to sound a bell alarm on overcurrent conditions, but not trip the breaker. Under these conditions the instantaneous trip armature (13-21) must have the trip screw (13-14) properly adjusted for high overload protection. For details concerning reset of the bell alarm see section VI - C under bell alarm.

INSPECTION AND ADJUSTMENT

The thermal magnetic trip device should be inspected prior to being put in service in the same manner as the series trip device to check that the pickup calibration is in accordance with the application requirements. The thermal trip device leaves the factory with the following standard settings unless otherwise specified in the purchase order:

Thermal magnetic trip element is set at 100% pickup calibration, Instantaneous trip element is set at 800% pickup. The thermal magnetic trip element may be adjusted without further testing as this element has been factory calibrated over its full range, but the instantaneous element would require calibration to change its pickup value. To adjust instantaneous pickup, loosen screw (13-22) and increase tension in pickup spring (13-20) to increase pickup and decrease tension to decrease pickup by rotating bracket (13-23) about locking screw (13-17)

MAINTENANCE AND REPLACEMENT

The individual phase thermal trip device assemblies are mounted on a common base and fastened to the breaker in the same manner as the series trip device. This assembly requires the same procedure for removal and series coil replacement as the series trip assembly. Refer to section V - A "Series trip Maintenance and Replacement" for detail instructions. Other parts of the device should not be removed or disassembled since to do so will disturb the calibration.

C. Overcurrent Trip Flag Indicator and Reset. Each phase of the series and thermal magnetic trip devices are equipped with flags that indicate which phase or phases caused the tripping of the breaker due to overcurrent or short circuit conditions. These flags (14-7) are so arranged that as the trip armatures (14-20) close the gap on tripping, the armatures engage flag release shaft (14-21) which pivots about point "A". The engagement of the flag shaft by the trip armature causes the shaft to move out from under the hook point "B" on the flag (14-7) and release same at the instant the breaker trips. The target rotates in clockwise direction due to gravity and torsion spring (14-3) which in turn rotates the reset shaft (14-1) by means of pin (14-2). The pins (14-2) which rotate the reset shaft (14-1) are so located that only the phase or phases which caused the breaker to trip, release the flag. The flag is then visible at point "C" to the operater to indicate which phase caused the breaker to trip. To reset the flags, push reset button (14-6), which actuates reset lever (14-7) to rotate reset shaft (14-1), thereby resetting flags (14-7) at point "B", providing that the overcurrent condition has been removed.

NOTE: The tripping of the flag on any phase of the trip device during tripping cycle does not lockout the breaker as the breaker may be closed without resetting flag system.

PART VI
ACCESSORY ATTACHMENTS

A. Shunt Trip Attachment. The shunt trip attachment Fig. 11 is used to trip the breaker electrically from a remote position by closing its circuit either manually through a control switch or automatically through relay contacts. Since the shunt trip coil is designed for a momentary duty cycle, an "a" auxiliary contact switch is used to interrupt its circuit immediately after the breaker is tripped. Each electrically operated breaker is equipped with a shunt tripping device for remote control. This device is mounted on a bracket on the left side of the mechanism

frame as shown on Fig. 1. It includes a coil, magnet, armature and return torsion springs. Energization of the coil (11-3) causes armature (11-2) to pickup and engage trip bar (11-4) thereby tripping the breaker. The torsion springs (11-1) are used primarily to return the armature to a neutral position after the breaker trips. Little or no maintenance or adjustment is required on this device. To check, move the armature to the pickup position and note that the trip bar has moved the trip latch as explained in section III paragraph A under operating mechanism.

B. Auxiliary Switch Attachment. The auxiliary switch Figure 7 is of the rotary type and is sturdily constructed. This switch is mounted on the operating mechanism frame and functions by direct connection to the breaker mechanism. Electrically operated breakers are provided with 2 "a" and 2 "b" (7-4) contacts in this switch, mounted on the left side of the mechanism. Provisions are available for the mounting of an identical switch on the reverse side. "a" switches are closed when the breaker contacts are closed, and "b" switches closed when breaker contacts are open. The auxiliary switch contacts are factory set for "a" and "b" position, but may be interchanged in the field by reassembling the rotor element (7-1) as desired. A moulded bakelite cover (7-3) which snaps on can be easily removed for contact inspection.

C. Bell Alarm Switch Attachment. The bell alarm switch (14-8) functions to close an alarm circuit upon automatic overcurrent tripping of the breaker, or by special application may indicate an overcurrent condition by sounding an alarm without tripping the breaker. This switch is a single pole double throw switch mounted on the outer phase trip device. The bell alarm switch is actuated by lockout lever (14-9) which rotates with reset shaft (14-1). The rotation of the reset shaft is described under "series trip flag indication" section V paragraph C. The rotation of lockout lever (14-9) trips toggle spring (14-16) which holds this lever in the tripped position until reset button (14-6) is actuated to reset the reset shaft. It must be noted that the bell alarm switch is reset only by manually actuating the reset button (12-6). Replacement of the bell alarm switch requires only the removal of two mounting screws holding switch to the trip device. On reassembly check to be certain that alarm will sound when lockout lever (12-9) is released.

D. Mechanical Overcurrent Lockout Attachment. The mechanical lockout feature prevents the circuit breaker from being closed either manually or electrically after being tripped by an overcurrent condition. This feature locks the trip mechanism in the trip free position and can be removed only by manually resetting reset button.

The mechanical lockout Fig. 14 is provided by adding lockout bar (14-18) to the breaker trip shaft (14-22) in the mounting location provided on this shaft (14-22). When an overload has tripped the breaker and the reset shaft (14-1) on the trip device, as described under "series trip flag indication" section V paragraph C, the mechanical lockout bar (14-18) is held in the tripped position by lockout lever (14-9). This lever (14-9) as explained under section VI paragraph C is held in the tripped position by toggle spring (14-16). This prevents the breaker trip latch (2-43) from resetting. Since the breaker is mechanically trip free, it cannot be closed by any means until the trip latch (2-43) is reset by actuating the reset button (14-6) to reset lockout lever (14-9).

Allis-Chalmers Mfg. Company
Boston Works
Boston, Mass.

February 1955

ldding
the
over-
the
on"
is
s lever
n the
the
er is
ntil
on (14-6)

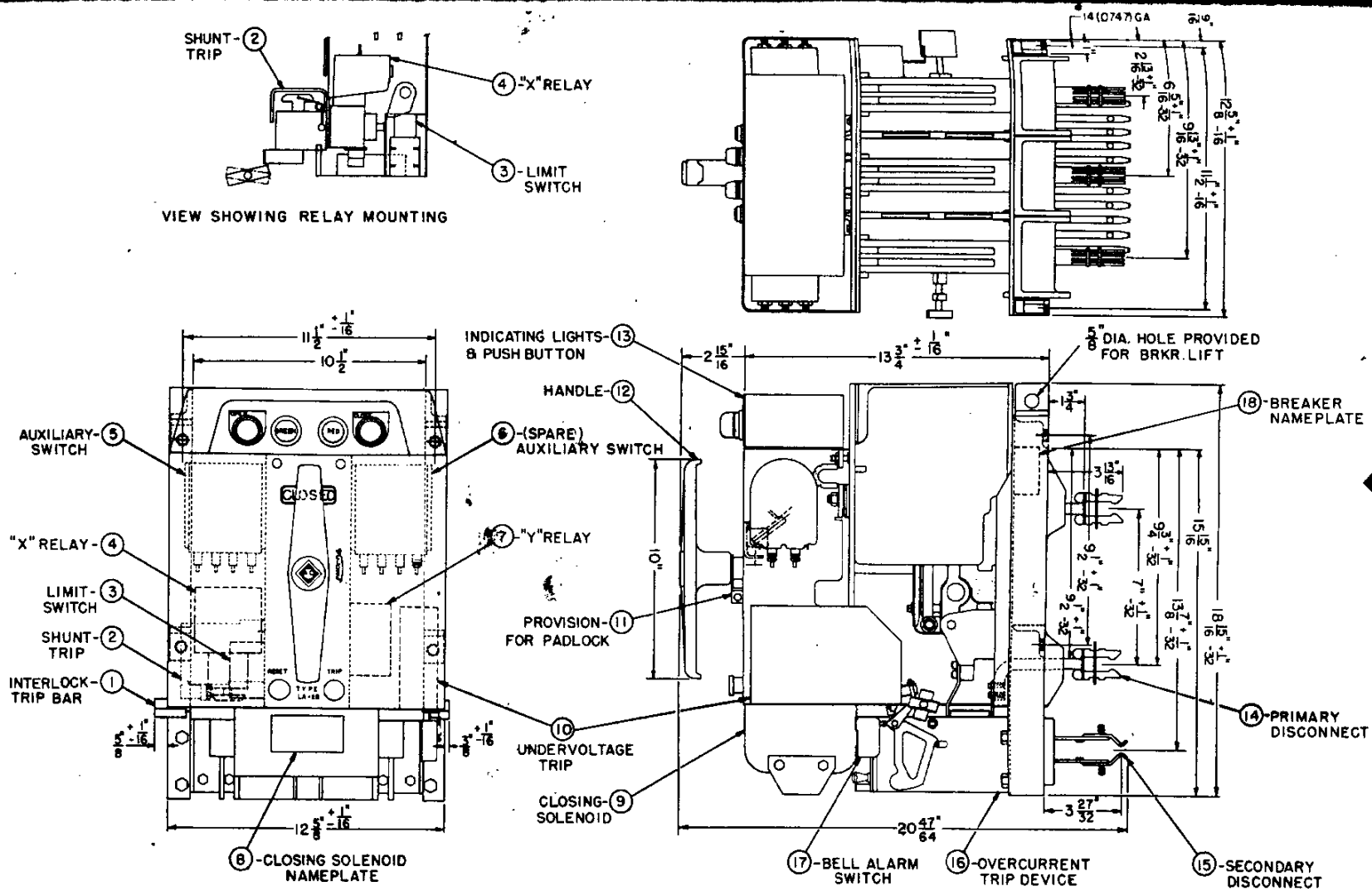

FIG. - 1
ELECTRICALLY OPERATED BREAKER

ALLIS-CHALMERS MANUFACTURING COMPANY

ALLIS-CHALMERS MANUFACTURING COMPANY

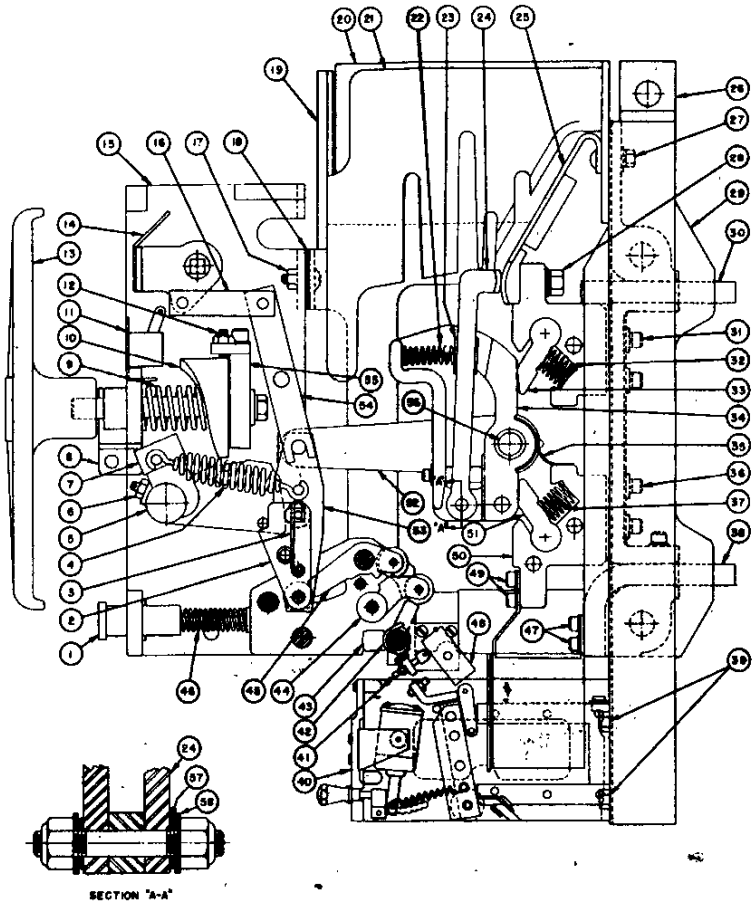

MANUAL TRIP, RESET BUTTON
PROP LATCH
PROP LATCH SPRING
OPENING SPRING
MAIN CLOSING LINK
LOCKING SCREW
CAM FOLLOWER
BREAKER LOCK
CLOSING HANDLE RETURN SPRING
MANUAL CLOSING CAM
OPERATION COUNTER (WHEN REQ'D)
CLOSING CAM OVERTRAVEL STOPS
MANUAL CLOSING LEVER
OPEN - CLOSE INDICATOR
MECHANISM FRAME
LINK
SCREW
SHIM
FRONT BARRIER
PHASE BARRIER

21. ARC CHUTE
22. ARCING CONTACT SPRING
23. ARCING CONTACT INSULATION
24. ARCING CONTACT (MOVABLE)
25. ARCING CONTACT (STATIONARY)
26. FRAME
27. SCREW
28. SCREW
29. PANEL BASE
30. STATIONARY MAIN CONTACT BLOCK
31. SCREW
32. MAIN CONTACT SPRINGS
33. MAIN CONTACT FINGER (STATIONARY)
34. MAIN CONTACT (MOVABLE)
35. SHIELD
36. SCREW
37. HINGE CONTACT SPRING
38. LOWER STUD CONNECTOR
39. SCREW
40. TRIP UNIT
41. TRIP LATCH ADJUSTING SCREW
42. TRIP LATCH ADJUSTING SPRING
43. TRIP LATCH
44. SECONDARY TRIP LEVER
45. PRIMARY TRIP LEVER
46. MANUAL TRIP, RESET, SPRINGS
47. SCREW
48. TRIP BLOCK
49. SCREW
50. HINGE CONTACT BLOCK
51. HINGE CONTACT FINGER
52. CONTACT OPERATING LEVER
53. MAIN TOGGLE LINK
54. LINK
55. MAIN CLOSING LINK OVERTRAVEL STOP
56. MAIN OPERATING SHAFT
57. SPRING WASHER
58. RETAINING WASHER

FIG. 2

MANUALLY OPERATED BREAKER

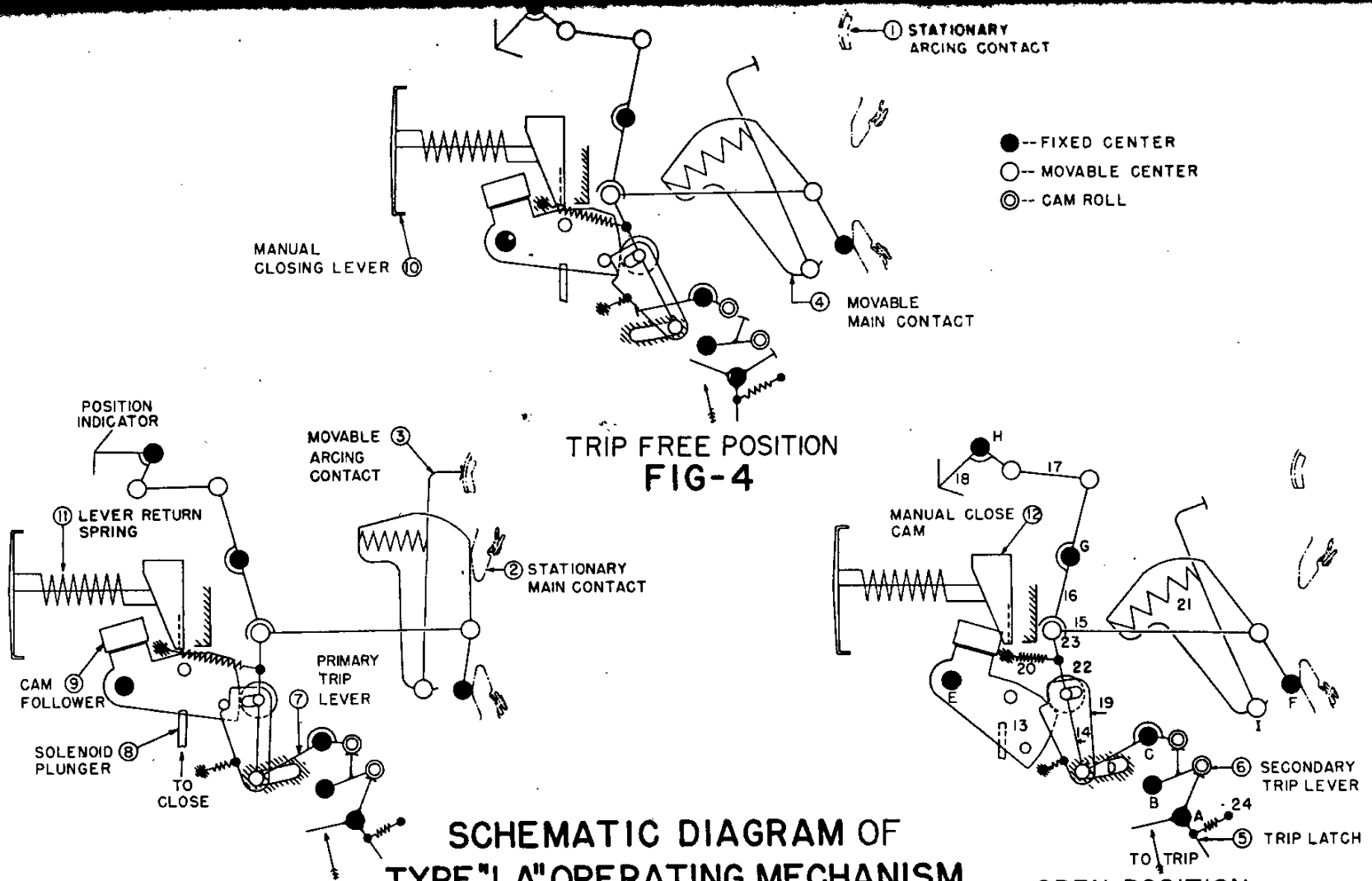

TRIP FREE POSITION
FIG-4

CLOSED POSITION
FIG-3

OPEN POSITION
FIG-5

SCHEMATIC DIAGRAM OF TYPE "LA" OPERATING MECHANISM

ALLIS-CHALMERS MANUFACTURING COMPANY

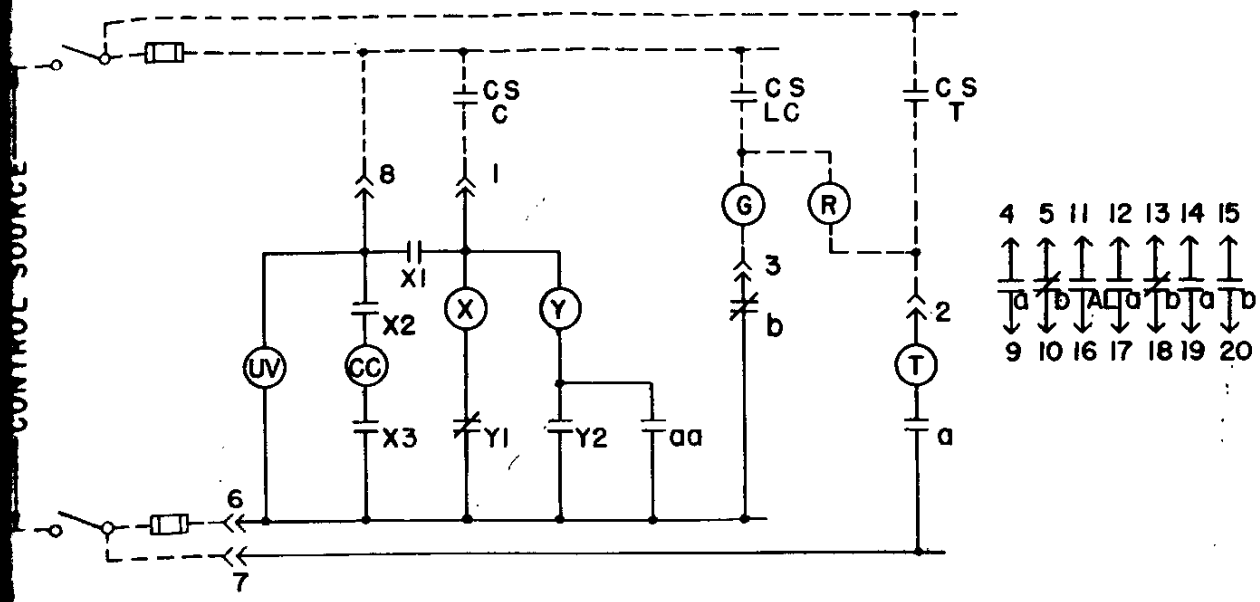

TYPICAL WIRING DIAGRAM FOR
ELECTRICALLY OPERATED BREAKERS

FIG. 6A

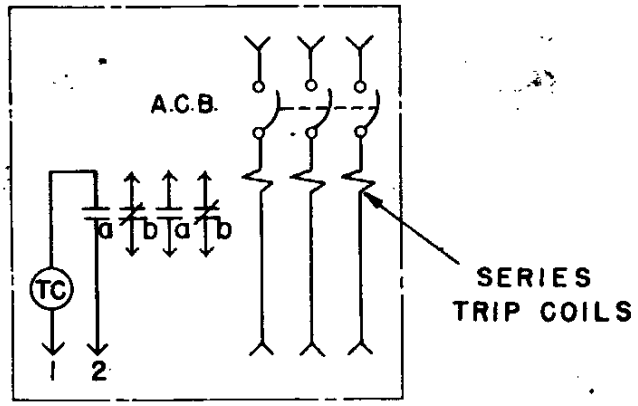

TYPICAL WIRING DIAGRAM FOR
MANUALLY OPERATED BREAKERS

FIG. 6B

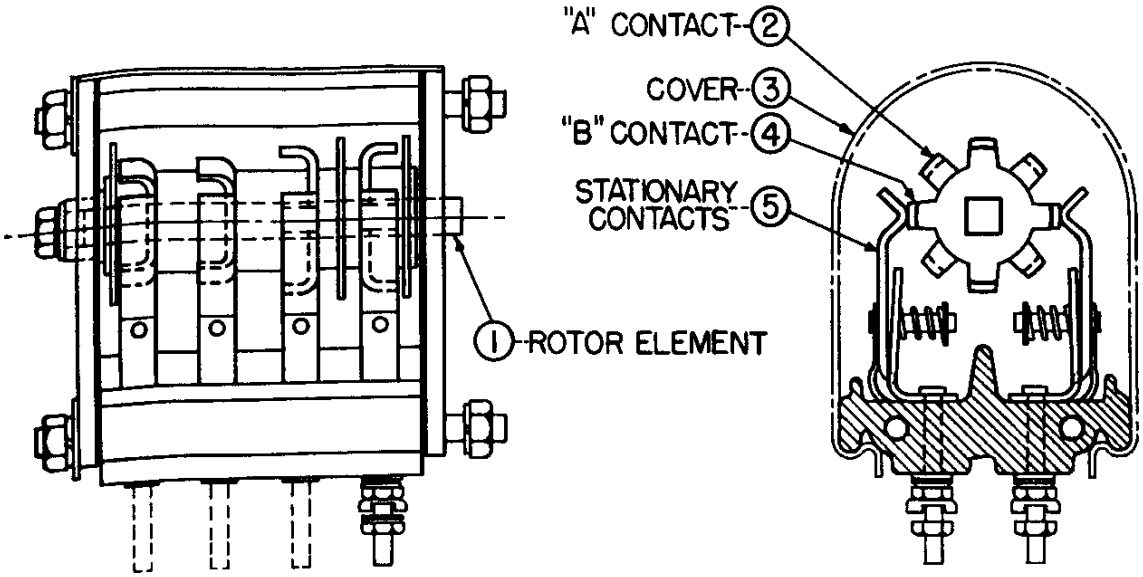

AUXILIARY SWITCH
FIG. 7

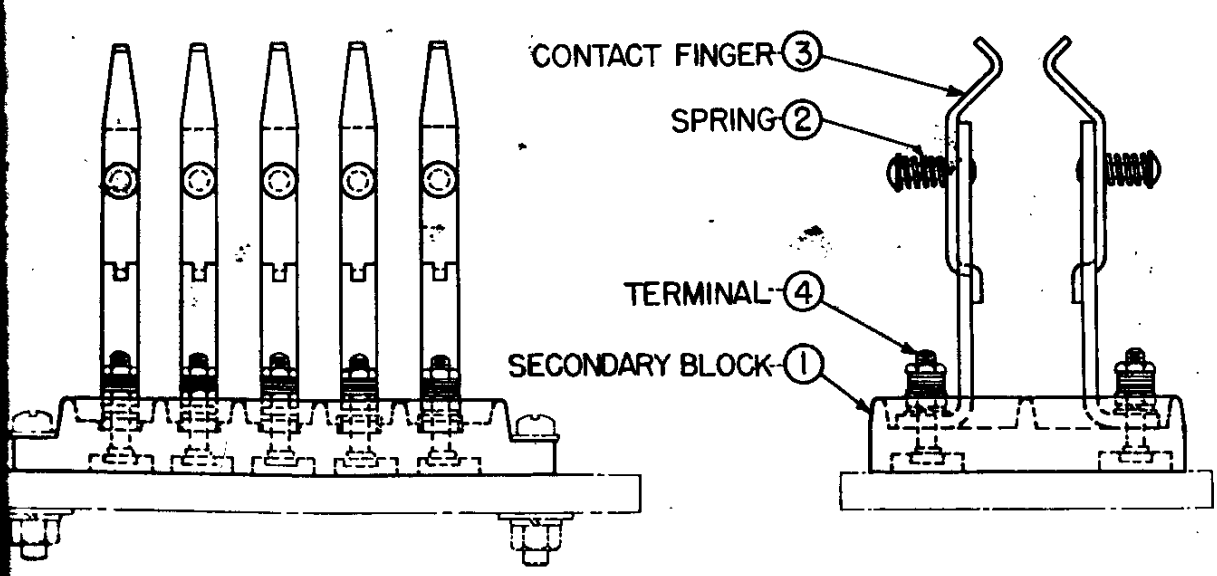

SECONDARY DISCONNECT ASSEMBLY
FIG. 8

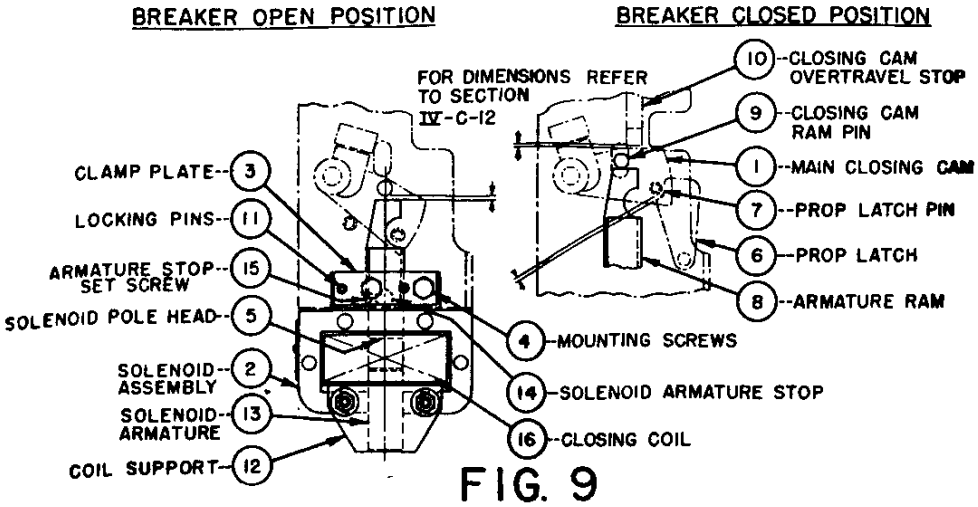

FIG. 9

CLOSING SOLENOID

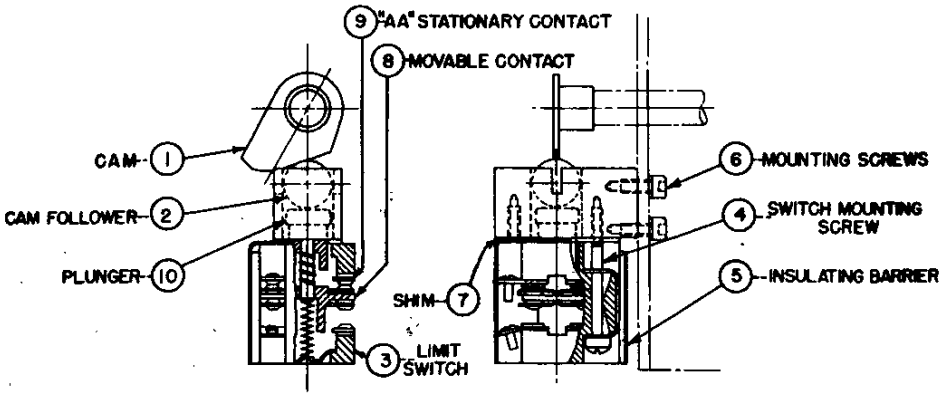

FIG. 10

LIMIT SWITCH
CLOSED POSITION

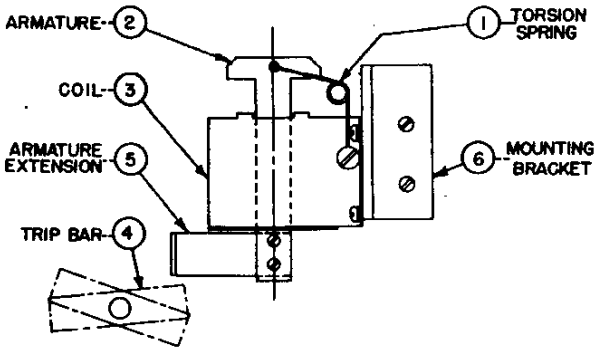

FIG. 11

SHUNT TRIP DEVICE
ATTACHMENT

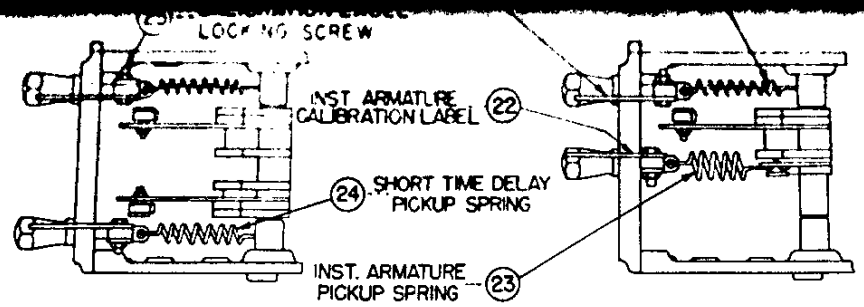

BOTTOM VIEW
DUAL SELECTIVE TRIP DEVICE
(LONG & SHORT TIME ELEMENTS)

BOTTOM VIEW
DUAL MAGNETIC TRIP DEVICE
(LONG TIME & INSTANTANEOUS ELEMENTS)

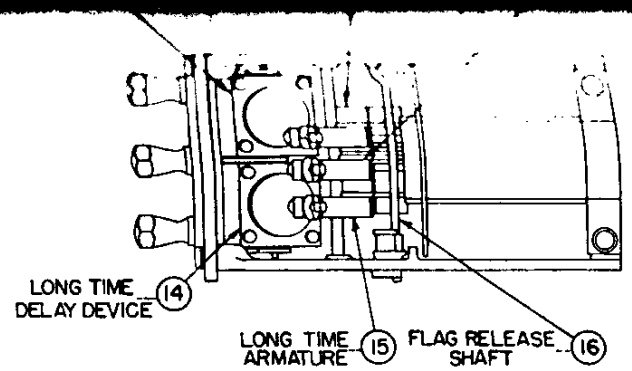

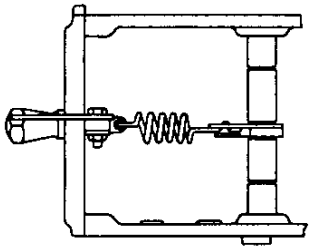

BOTTOM VIEW
SERIES INSTANTANEOUS TRIP DEVICE
(ADJUSTABLE 100-200% PICKUP)

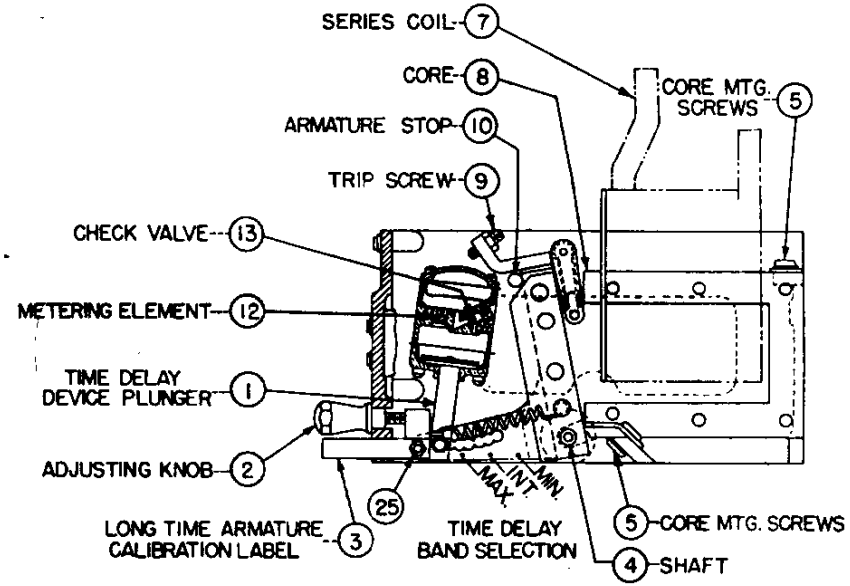

FIG. 12
SERIES OVERCURRENT TRIP DEVICE
"LA" TYPE BREAKERS

ALLIS-CHALMERS MANUFACTURING COMPANY

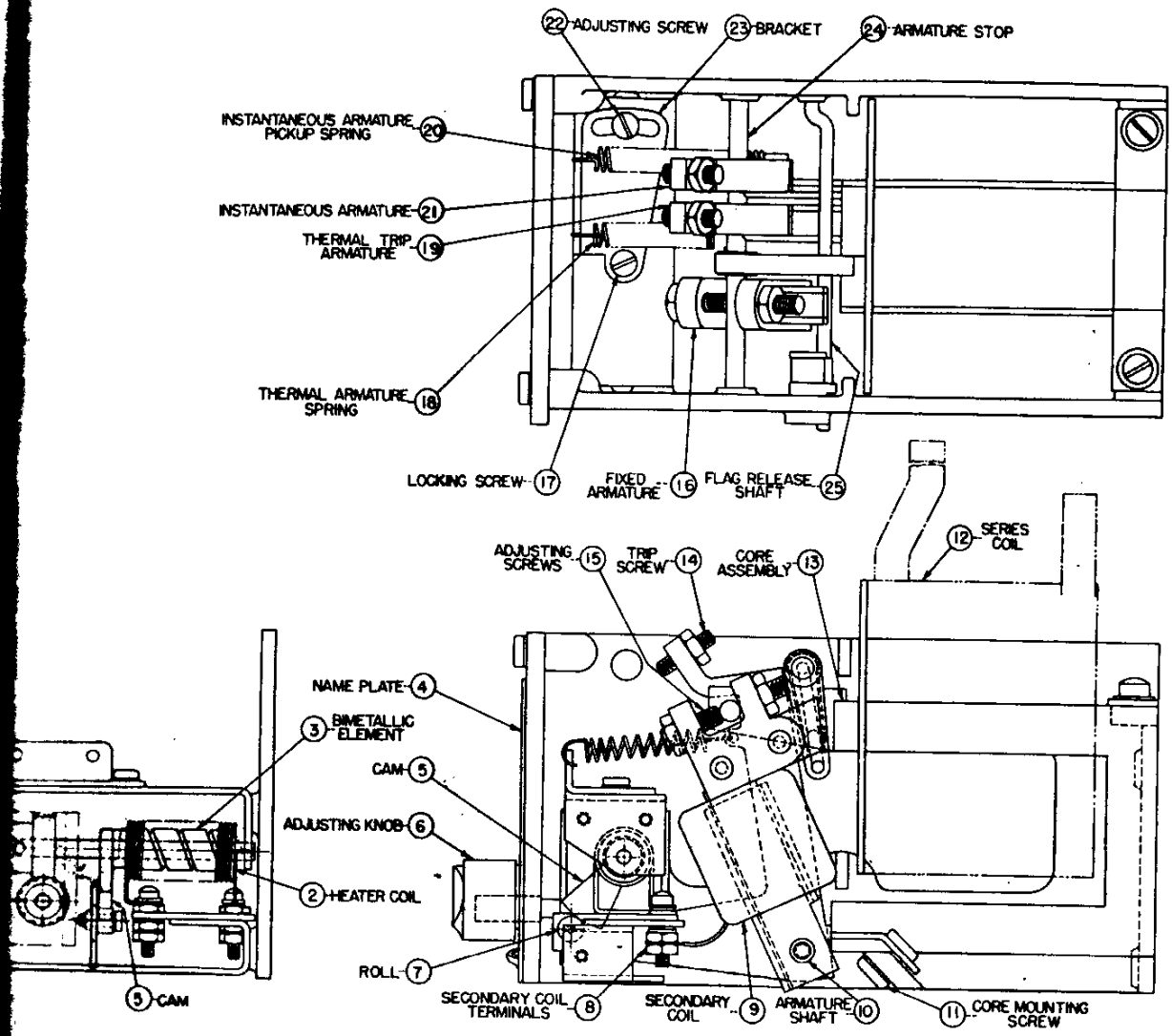

THERMAL MAGNETIC OVERCURRENT TRIP DEVICE
FIG. 13

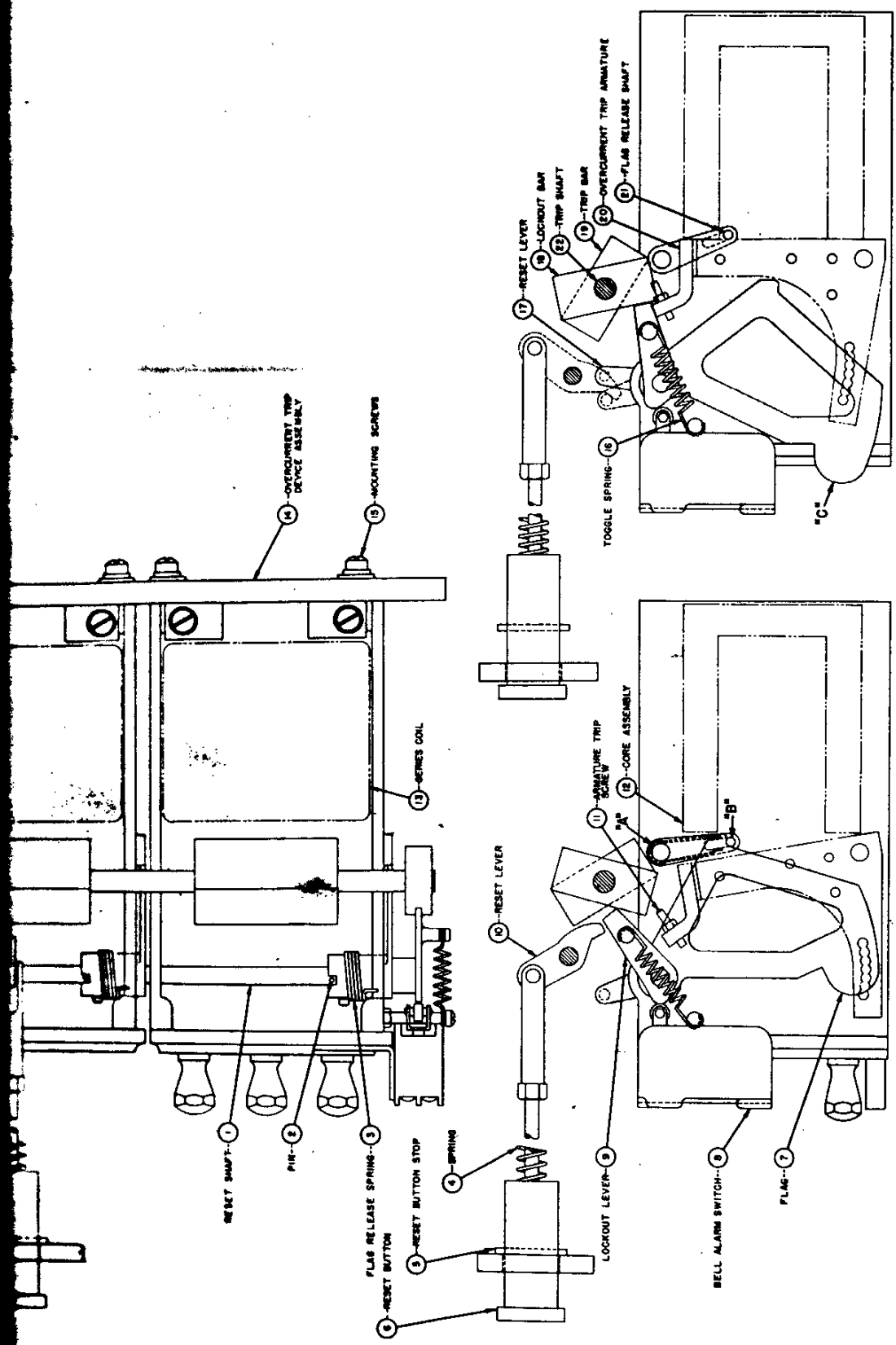

FIG. 14

INDICATOR FLAG, MECHANICAL LOCKOUT, BELL ALARM SWITCH & RESET BUTTON FOR OVERCURRENT TRIP DEVICES

ALLIS-CHALMERS MANUFACTURING COMPANY

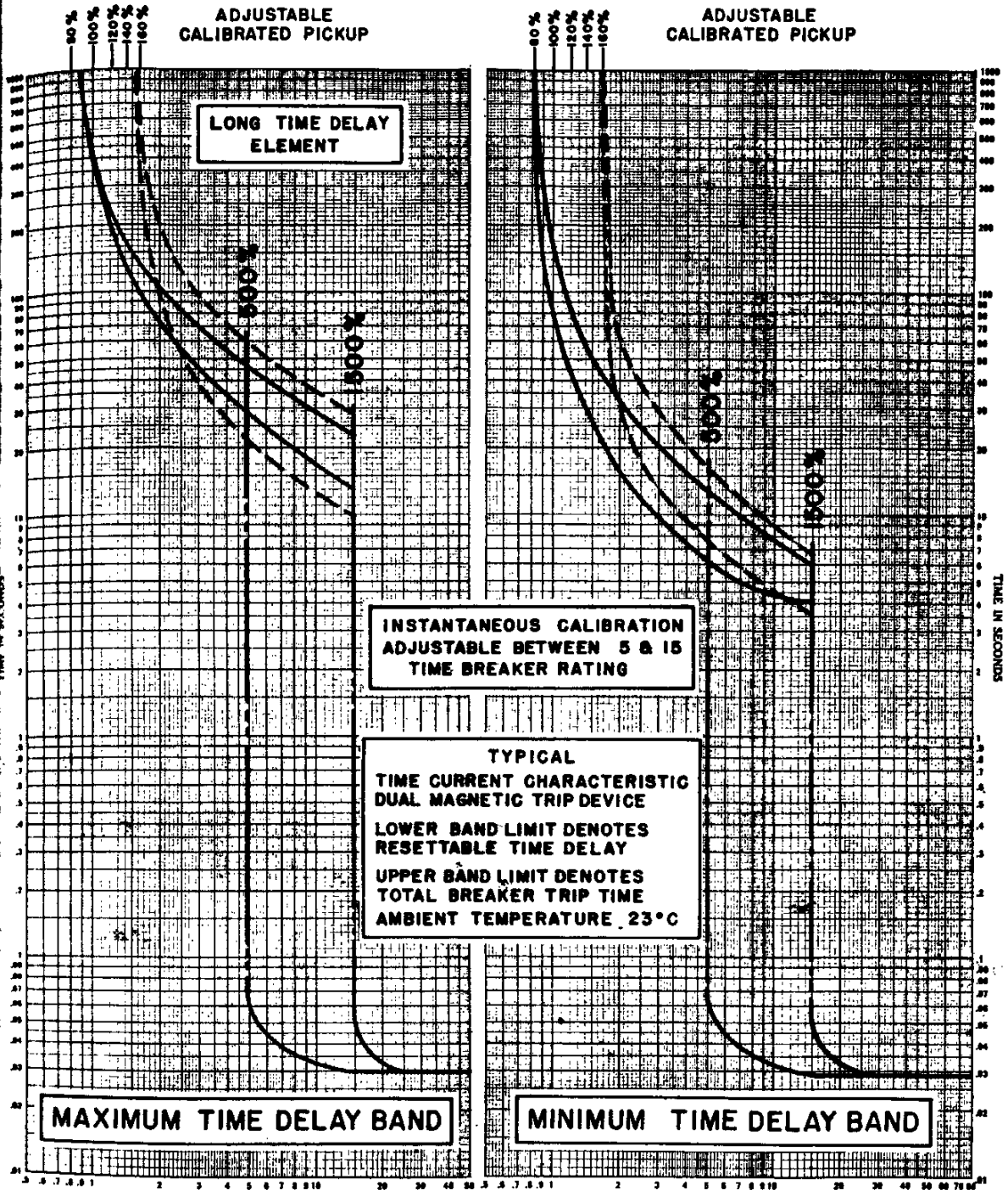

FIG.15

SERIES OVERCURRENT TRIP CALIBRATION CURVES

MARCH 4, 1955 71-340-065

ALLIS-CHALMERS MANUFACTURING COMPANY

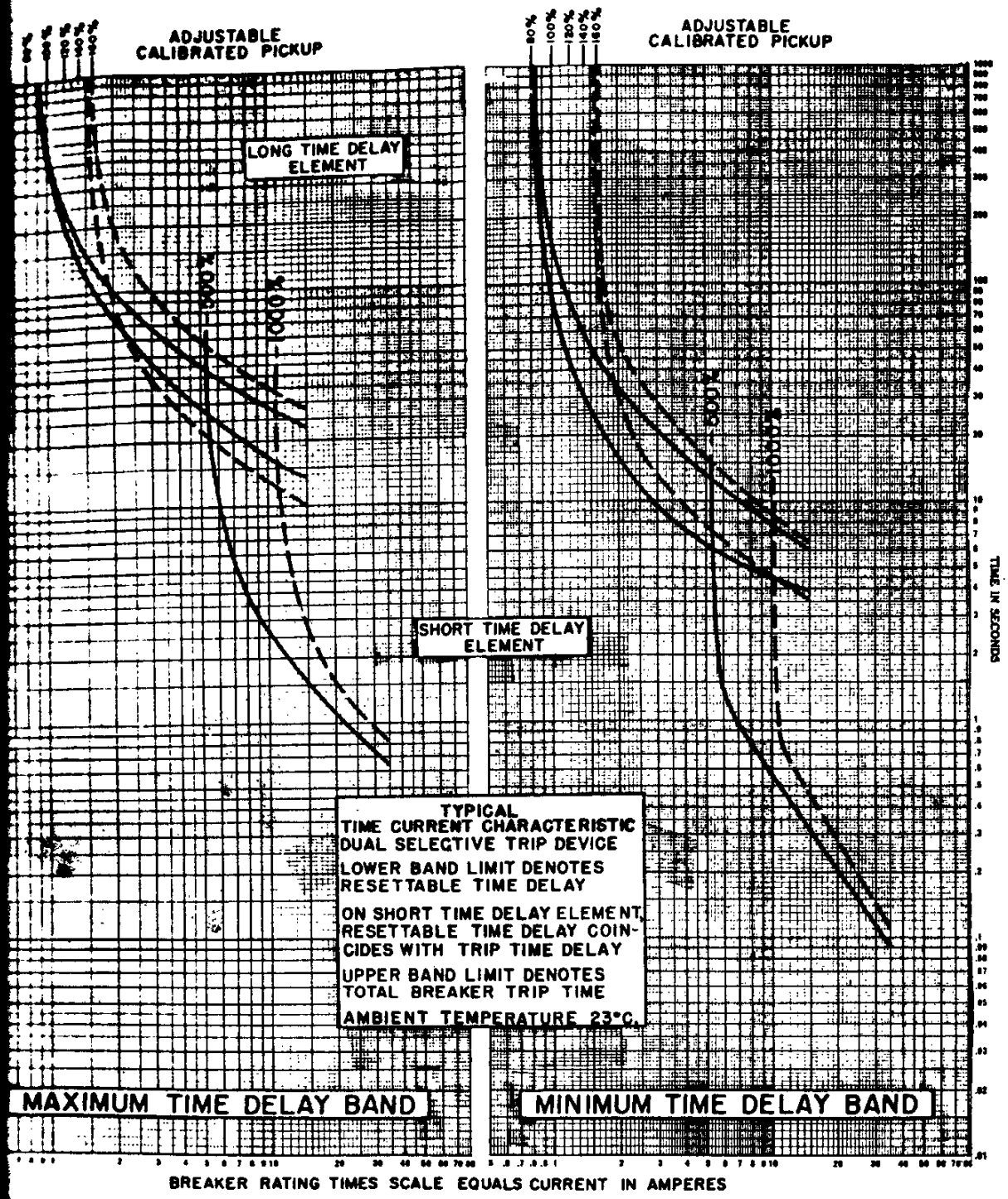

FIG. 16

SERIES OVERCURRENT TRIP CALIBRATION CURVES

MARCH 4, 1955

71-340-066

ALLIS-CHALMERS MANUFACTURING COMPANY

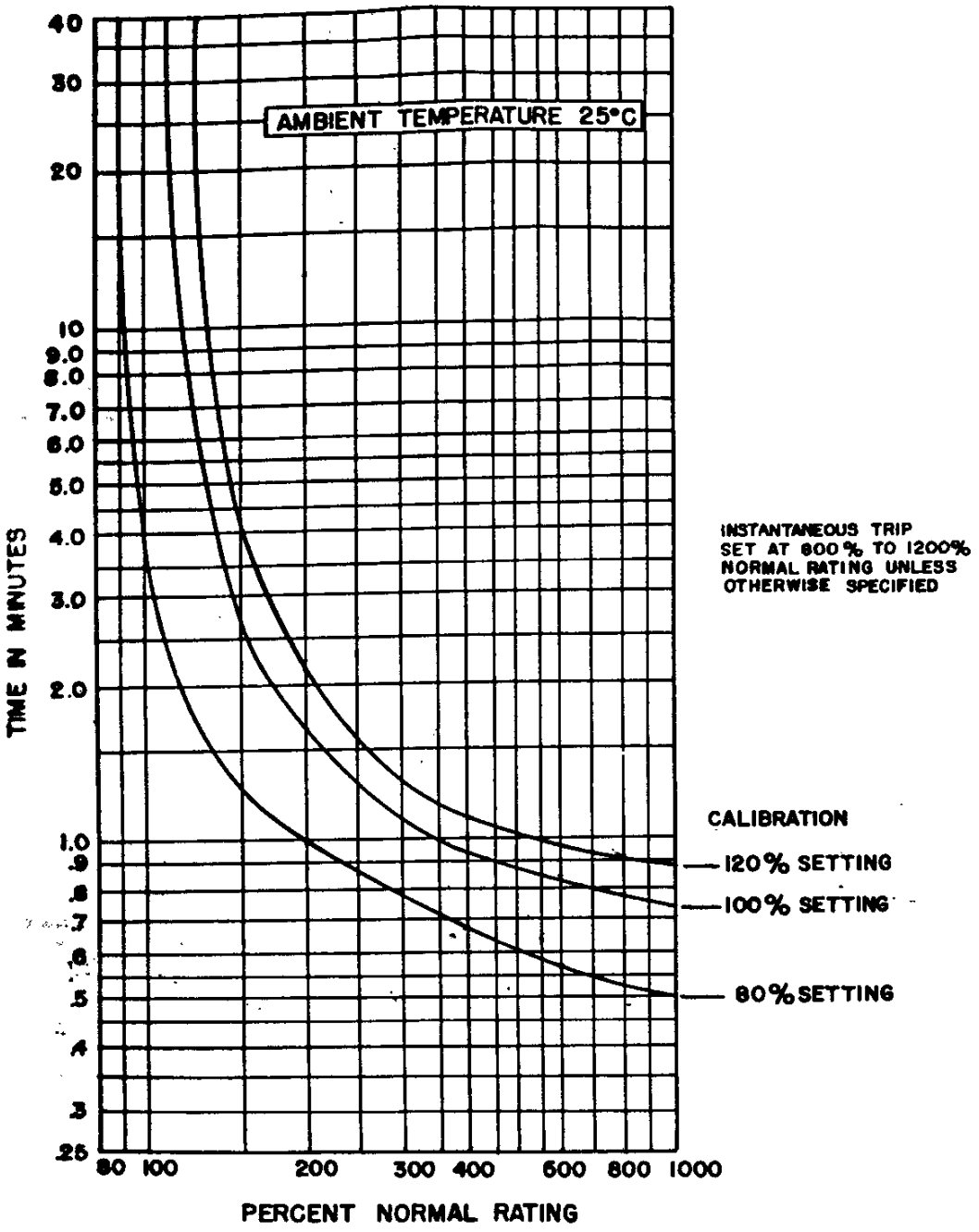

FIG. 17A

TYPICAL TIME CURRENT CURVE
THERMAL TRIP DEVICE

NOV. 4, 1955 71-240-179

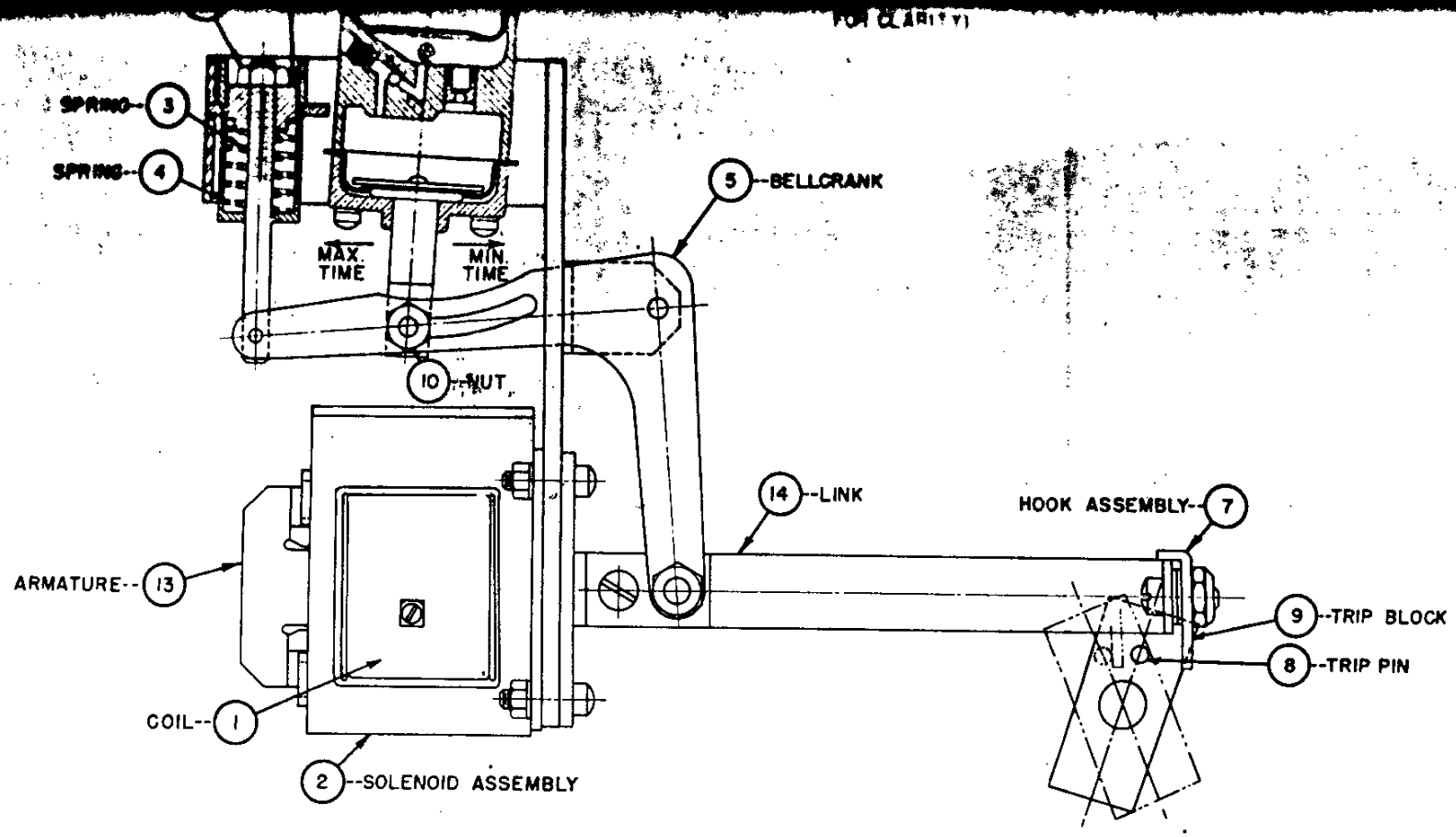

FIG. 18

TYPICAL UNDERVOLTAGE TRIP DEVICE

JUNE 3, 1955

71-440-031

ALLIS-CHALMERS MANUFACTURING COMPANY

UNDERVOLTAGE TRIP DEVICE
FOR TYPE LA-25
AIR CIRCUIT BREAKER

UNDERVOLTAGE TRIP DEVICE

The undervoltage trip attachment (Fig. 18) provides a means for automatically tripping the breaker when the voltage drops below a predetermined value. The device consists essentially of a solenoid with a coil for the specified voltage, a positive displacement silicone oil time delay device (which functions the same as those described under Part V - Protective devices) and necessary linkage for tripping the breaker. This device is set at the factory to pick up and seal in if line voltage is 80% of normal voltage or above and will drop out if line voltage drops to some value between 30 and 60% of normal line voltage.

The undervoltage trip device (Fig. 18) is shown in the energize position and functions to trip the breaker in the following manner - The energy produced by coil (18-1) of solenoid assembly (18-2) holds armature (18-13) firmly against its pole head, and this armature through bell crank (18-5) preloads springs (18-3) and (18-4). When a drop in voltage occurs (below a predetermined value), the force exerted on a bell crank by the springs overcomes the magnetic attraction on the armature causing the armature to leave the pole head and trip the breaker. The breaker is tripped by hook assembly (18-7) engaging trip pin (18-8) on trip block (18-9) rotating this block counterclockwise which acts to trip the breaker as previously described in Section III - A of the operating mechanism. The time delay device (18-6) is fastened to bell crank (18-5) and acts to to control the time in which the preloaded springs respond to trip the breaker. For those applications in which instantaneous undervoltage trip is required, the time delay device (18-6) is omitted.

INSPECTION AND ADJUSTMENT

The undervoltage trip device should be inspected prior to being put in service to see that all packing traces are removed and that the armature (18-13- slides freely to the breaker trip position without being energized. This device (with time delay) leaves the factory set at 2 seconds time delay, when the voltage drops to zero, unless otherwise specified. The time delay device is adjustable, but not calibrated, between 2.5 seconds and .5 seconds. This adjustment is obtained by loosening nut (18-10) and positioning time delay device (18-6) on bell crank (18-5) as shown in (Fig. 18). The pick up and drop settings can be adjusted by loosening locknut (18-11) and adjusting the pre-compression of springs (18-3) and (18-4) by turning adjusting nut (18-12).

NOTE: After making this adjustment, a check should be made to see that the armature still seats firmly on the pole head, otherwise the increased exciting current may cause the coil to overheat.

Allis-Chalmers Mfg. Co.
Boston Works
Boston, Mass.

Jan. 1957

ALLIS-CHALMERS MANUFACTURING COMPANY

PROCEDURE FOR CHANGING COILS IN TRIP UNITS ON LA-25 AND LA-50 AIR CIRCUIT BREAKERS UP THROUGH 600 AMPS

1. Loosen shoulder screw (1-1) located on the bottom of handle (1-2) and then slide the handle from the shaft.

2. Remove the screws which hold the shroud in place and then slide off shroud.

3. Loosen slotted screws (1-3) on top of operating frame and remove the front barrier and arc chutes.

4. Remove hex head socket screws (1-4) which connect the leads of the trip coil to the lower contact block (1-5) on the right hand outside phase only.

5. Detach the three hex head socket screws (3-1) located on molded piece in back of lower contact block in the right outside phase.

6. Rotate the complete movable contact member (1-6) of the outside phase, until there is enough clearance to slide this section from the shaft.

7. Detach the hex head socket screws (2-1) which connect the trip coil leads to the lower contact blocks on the remaining two phases.

8. Remove the four assembly mounting bolts (3-2) which hold the base plate, upon which the three phases of the trip device are mounted to the frame.

9. Detach the four mounting screws (4-1) which hold the core assembly in place and lift the complete core assembly (4-2) out of the trip device. Slide the coil (4-3) off the leg of the core and replace with new coil.

10. The device can be reassembled by reversing the preceding steps. Care must be taken to insure that the two lower mounting screws holding the core in the assembly next to the armature shaft be securely tightened before the top two screws.

11. STANDARD TOOLS: All the tools used were standard and the following are recommended:

    (A) Universal Joint (1/4" drive)

    (B) 12" Extension Bar (1/4" drive)

    (C) 3/16" Hex Head Bit for Universal Joint (1/4" drive)

    (D) 3/16" Allen Head Wrench

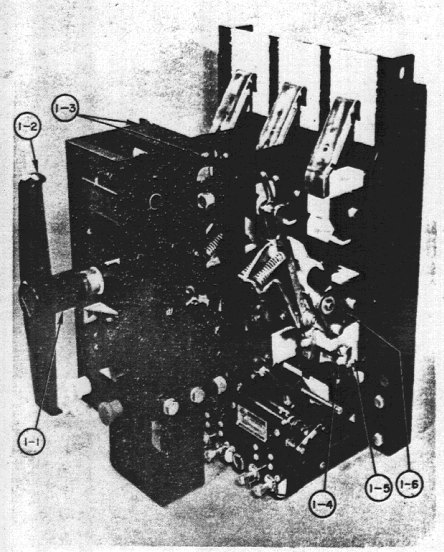

LA-25 Air Circuit Breaker with Arc Chutes, Phase Barriers Front Barrier Plate, and Shroud Removed.

Figure 1

LA-25 Air Circuit Breaker Showing Access to Middle Phase and Removal of Screws Holding Series Trip Coil in Place.

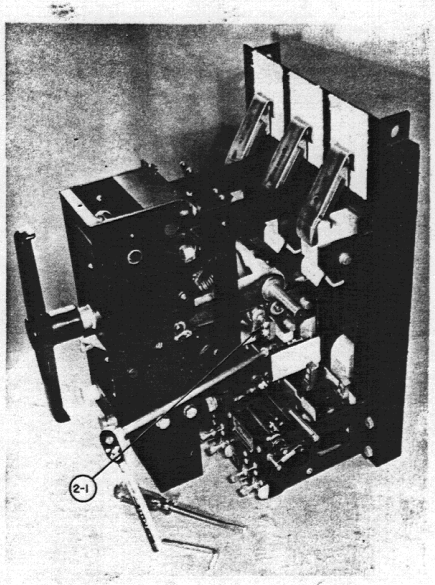

Figure 2

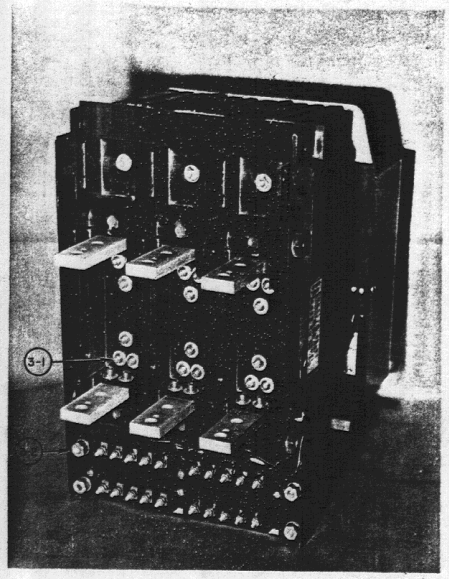

Figure 3

Rear View of LA-25
Air Circuit Breaker

Series Overcurrent
Trip Device for LA-25
Air Circuit Breaker,
Upper Front View,
Series Coil Mounted
in Left Phase.

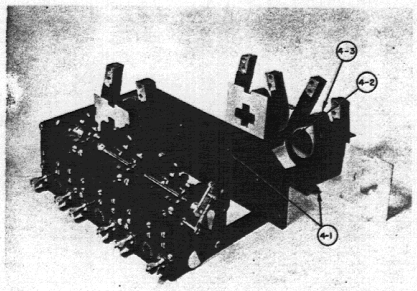

Figure 4

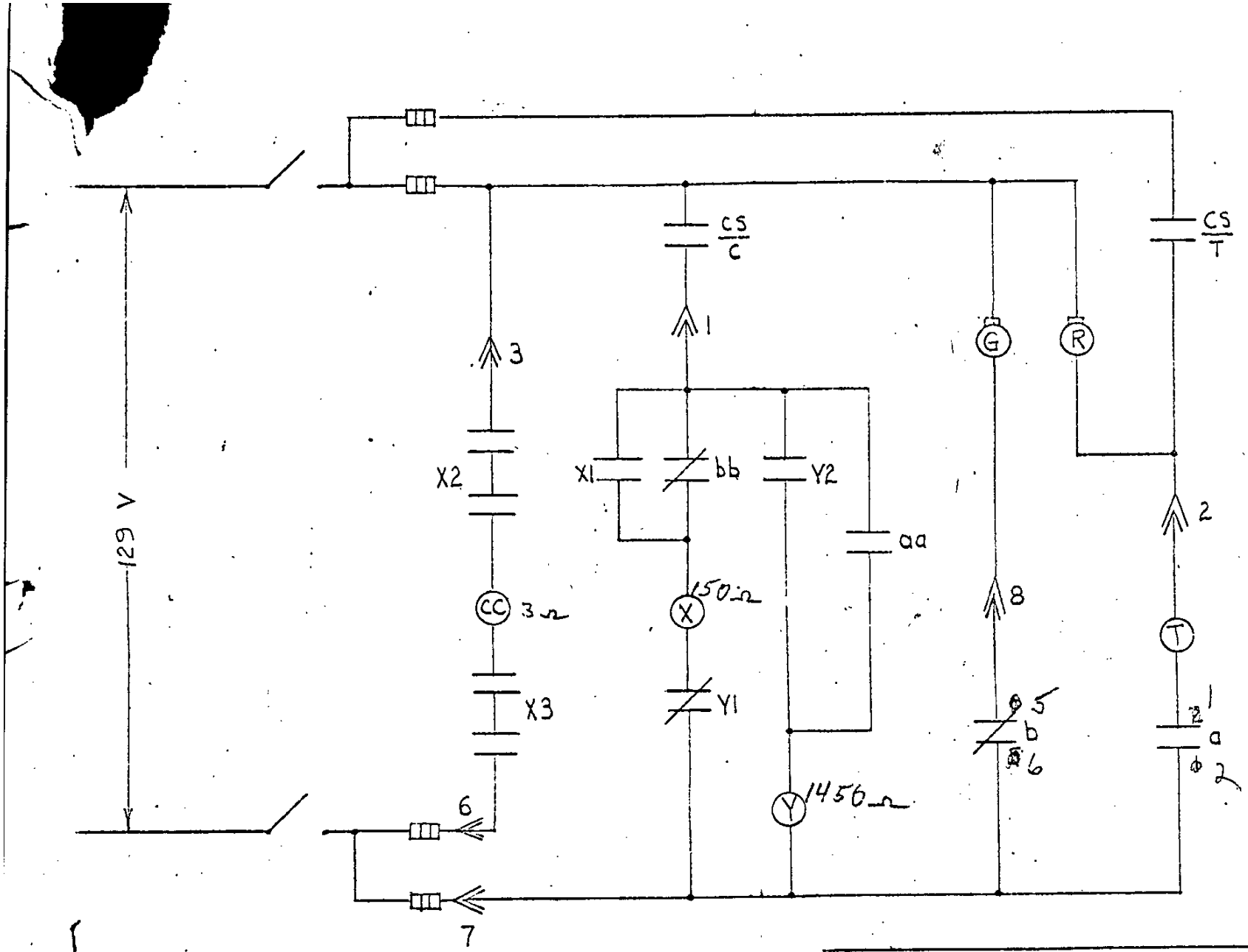

HOUSTON LIGHTING AND POWER CO.

~~W. A. PARISH PLANT~~

AC LA-25A440 BREAKER

9-4-70 J. N BESSER