Catalog LV 35 · 2006

circuit-breakers

3VT/3WT

Circuit-Breakers
from
10 A to 3200 A

SIEMENS

Related catalogs

Contents

Low-voltage Switchgear and Controlgear
SIRIUS · SENTRON · SIVACON

Order-No.:

Catalog
E86060-K1002-A101-A5-7600 — LV 1

Technical Information
E86060-T1002-A101-A5-7600 — LV 1 T

Available March 2006

Systems • Controlgear: Contactors and and contactor assemblies, solid-state switching devices • Protection Devices • Load feeders, motor and soft starters • Monitoring and control devices • Detecting devices • Commanding and signaling devices • Planning and configuration with SIRIUS • Transformers • Power supplies• ALPHA FIX terminal blocks • SIVACON Switchgear, distribution systems and cabinets • SENTRON Switching and protection devices for power distribution: Air circuit-breakers, molded-case circuit-breakers, switch disconnectors • Planning, design and management with SIMARIS • BETA installation equipment

Industrial Communication — IK PI
Industrial Communication for Automation and Drives

Order-No.:
E86060-K6710-A101-B5-7600

Industrial Ethernet to IEEE 802.3 • PROFINET • Industrial Mobile Communication • PROFIBUS to IEC 61158/EN 50170 • SIMATIC ET 200 distributed I/O • AS-Interface • Remote operation with SINAUT ST7 • Routers • ECOFAST system

SIDAC — LV 60
Reactors and Filters

Order No.:
E86060-K2803-A101-A3-7600

Commutating reactors for converters • Mains reactors for frequency converters • Iron-core output reactors • Ferrite output reactors • Iron-core smoothing reactor • Smoothing air-core reactors • Filter reactors • Application-specific reactors • Radio interference suppression filters • dv/dt filters • Sinewave filters

SIVACON 8PS — LV 70
Busbar Trunking Systems CD, BD01, BD2 up to 1250 A

Order No.:
E86060-K1870-A101-A1-7600

Busbar Trunking Units, Overview • System CD (25 A - 40 A) • System BD01 (40 A - 160 A) • System BD2 (160 A - 1250 A)

Automation & Drives — CA 01
The Offline Mall for A&D

Order No.:
E86060-D4001-A110-C3-7600

All products from Automation and Drives, including the products from the catalogues listed above.

A&D Mall

Internet:
http://www.siemens.com/automation/mall

All products from Automation and Drives, including the products from the catalogues listed above.

Registered trademarks

All product designations may be trademarks or product names of Siemens AG or supplier companies whose use by third parties for their own purposes could violate the rights of the owners.

Further information about low-voltage controlgear is available on the Internet at:
http://www.siemens.com/lowvoltage

Technical Assistance

Tel.: +49 (9 11) 8 95 - 59 00
Fax.: +49 (9 11) 8 95 - 59 07

Email: technical-assistance@siemens.com

Circuit-Breakers from 10 A to 3200 A

Catalog LV 35 · 2006

Please contact your local Siemens office

© Siemens AG 2005

SIEMENS

Introduction 1

3WT
Air Circuit-Breakers
up to 3200 A (AC) 2

3VT
Molded-Case
Circuit-Breakers
up to 630 A 3

Appendix 4

Introduction

1

1/2 Welcome to Automation and Drives

1/4 Totally Integrated Automation – Innovations for more productivity

1/6 Totally Integrated Power – Energy distribution and management from one source

1/8 Low-voltage, controls and distribution Basis for advanced solutions

1/10 3VT and 3WT circuit-breakers The economic solution

Welcome to Automation and Drives

We would like to welcome you to Automation and Drives and our comprehensive range of products, systems, solutions and services for production and process automation and building technology worldwide.

With Totally Integrated Automation and Totally Integrated Power, we deliver solution platforms based on standards that offer you a considerable savings potential.

Discover the world of our technology now. If you need more detailed information, please contact one of your regional Siemens partners.
They will be glad to assist you.

Totally Integrated Automation – innovations for more productivity

With the launch of Totally Integrated Automation, we were the first ones on the market to consistently implement the trend from equipment to an integrated automation solution, and have continuously improved the system ever since. Whether your industry is process- and production-oriented or a hybrid, Totally Integrated Automation is a unique "common solution" platform that covers all the sectors.
Totally Integrated Automation is an integrated platform for the entire production line - from receiving to technical processing

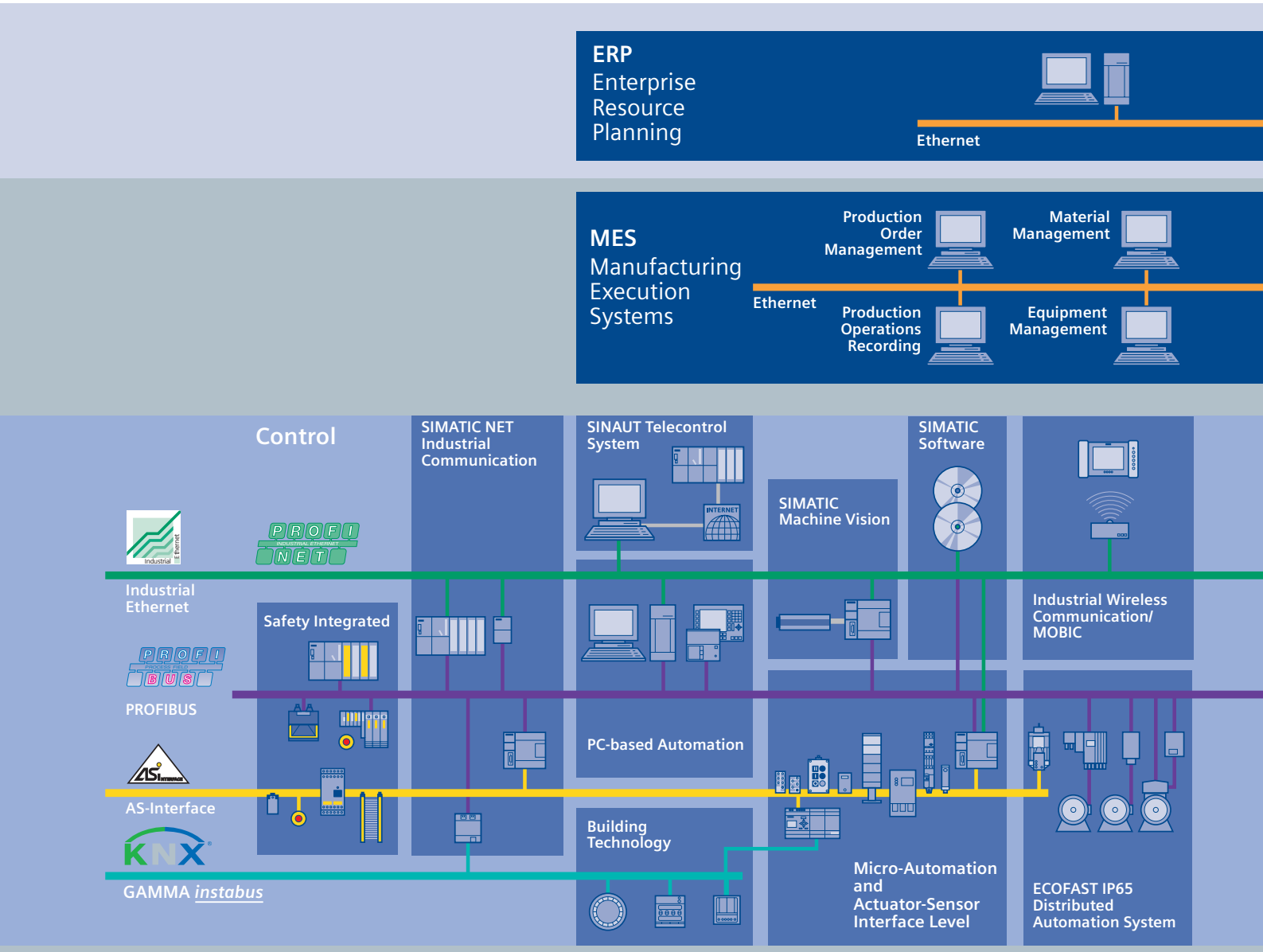

and production areas to shipping. Thanks to the system-oriented engineering environment, integrated, open communications as well as intelligent diagnostics options, your plant now benefits in every phase of the life cycle.
In fact, to this day we are the only company worldwide that can offer a control system based on an integrated platform for both the production and process industry.

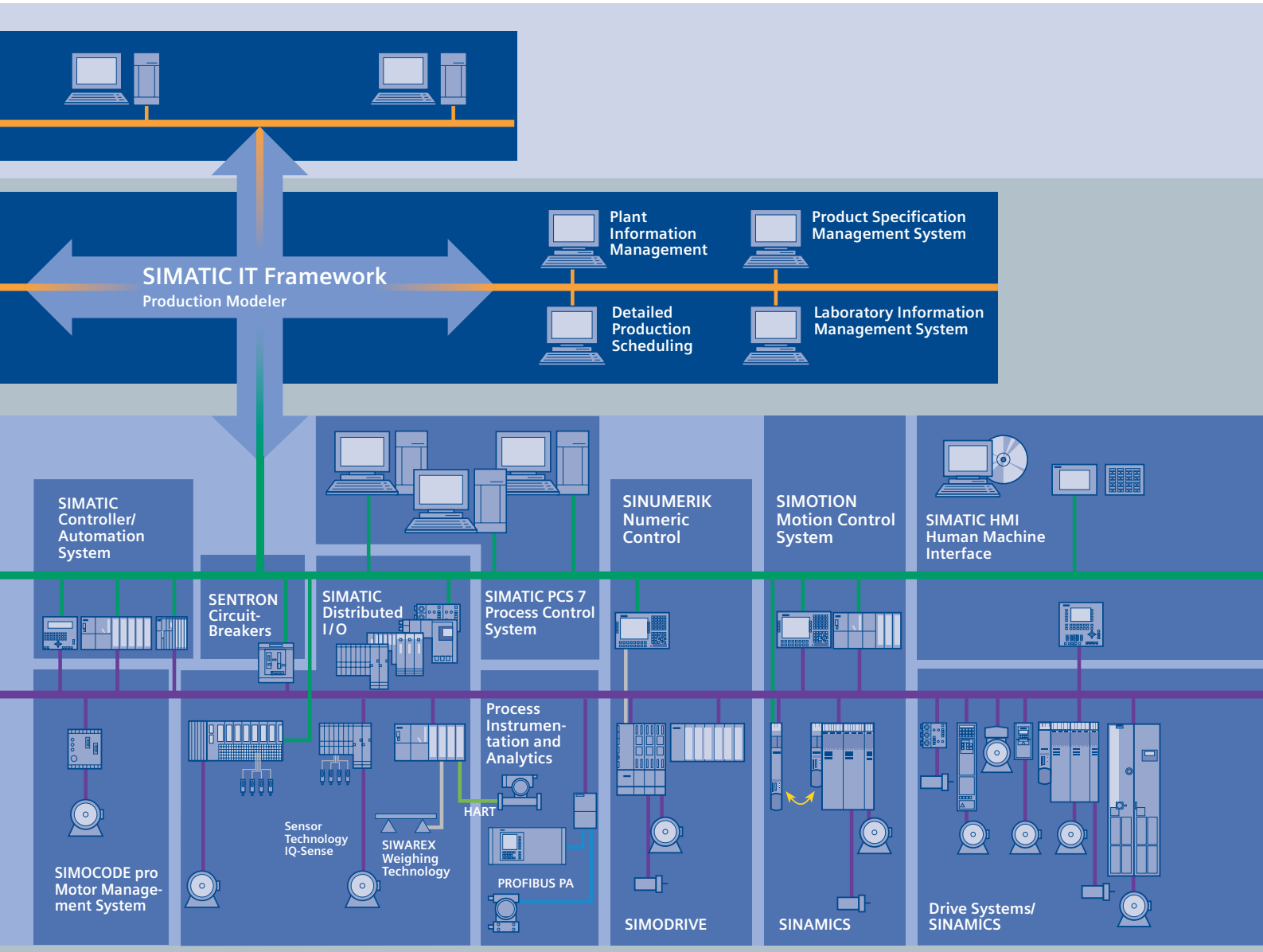

Totally Integrated Power – energy distribution and management from one source

Totally Integrated Power™ by Siemens offers integrated solutions for energy distribution in functional and industrial buildings covering everything from medium-high voltage to power outlets.

Totally Integrated Power™ is based on integration in planning and configuration as well as coordinated products and systems. In addition, it features communications and software modules for connecting power distribution systems to industrial automation and building automation, thereby offering a substantial savings potential.

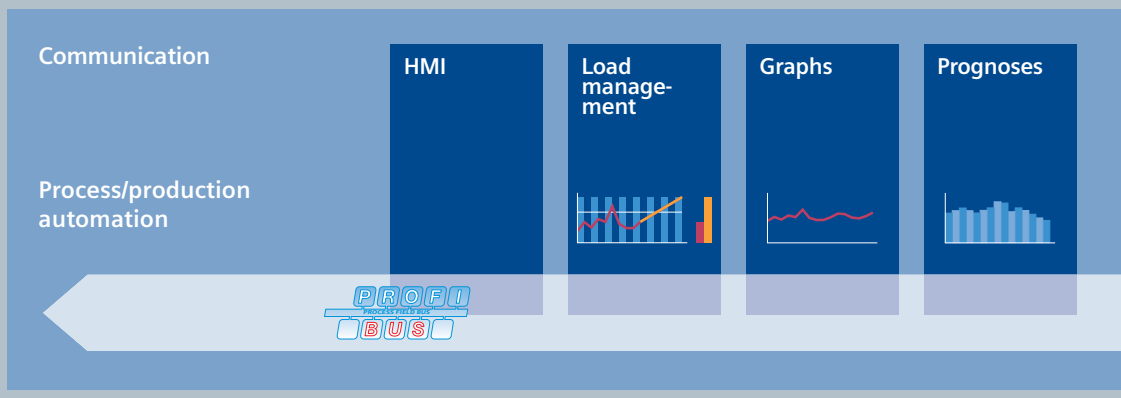

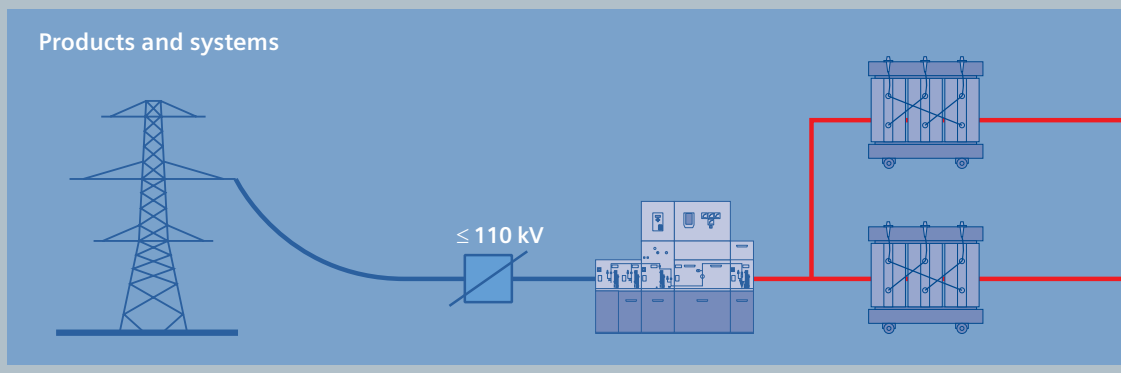

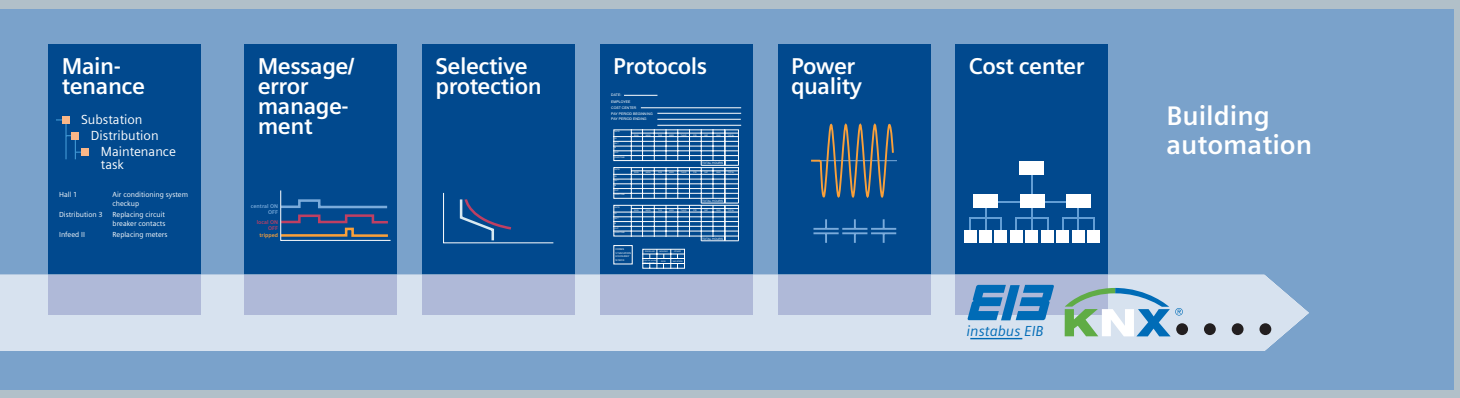
Main-
tenance
Substation
Distribution
Maintenance
task
Hall 1
Air conditioning system
checkup
Distribution 3
Replacing circuit
breaker contacts
Infeed II
Replacing meters
Message/
error
manage-
ment
Selective
protection
Protocols
Power
quality
Cost center
Building
automation
instabus EIB
KNX

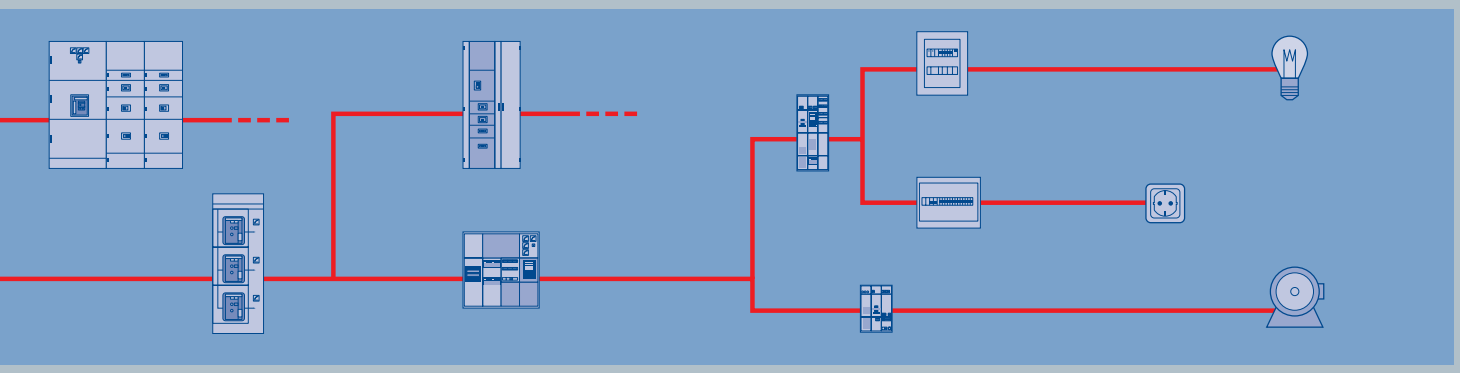

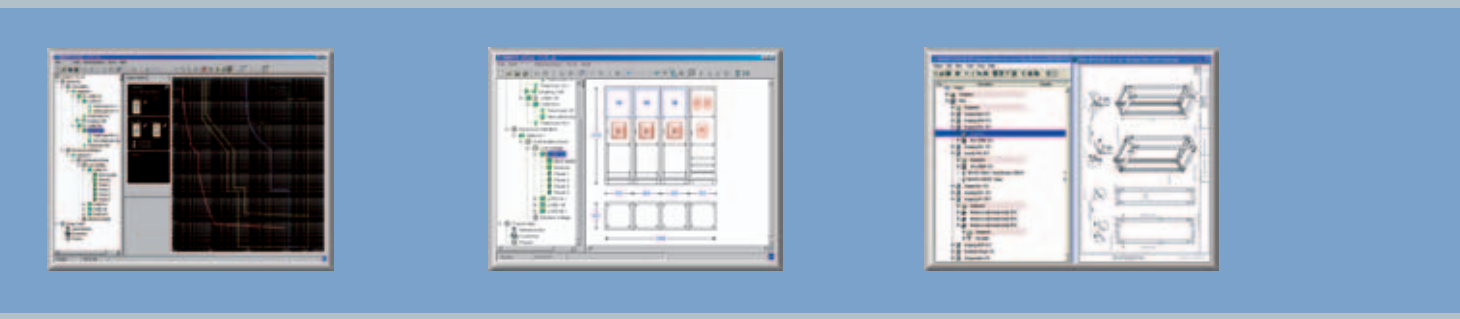

Low-voltage switchgear and control gear. The basis for progressive solutions.

The requirements in the field of low-voltage switchgear and control gear are high: Cost-effective solutions are required that can be easily integrated into switchgear cabinets, distribution boards or distributed systems and that can communicate with each other perfectly. Siemens has the answer to this, with SIRIUS industrial switchgear and low-voltage power distribution with SIVACON, SENTRON and SIMARIS.

SIRIUS industrial switchgear

In the SIRIUS product family, you will find everything that you require for switching, protecting and starting loads. Products for monitoring, controlling, sensing, signalling and power supply round off the spectrum of industrial switchgear. Totally Integrated Automation, Safety Integrated and ECOFAST additionally permit our product portfolio to be combined to form optimized systems. All in all, at Siemens you will find innovative switchgear and control gear with modern features such as integrated communication and safety technology that work to your advantage: The basis for ground-breaking integrated solutions.

SIRIUS modular system

SIRIUS Safety Integrated product family

SIVACON switchboards

SENTRON switching devices

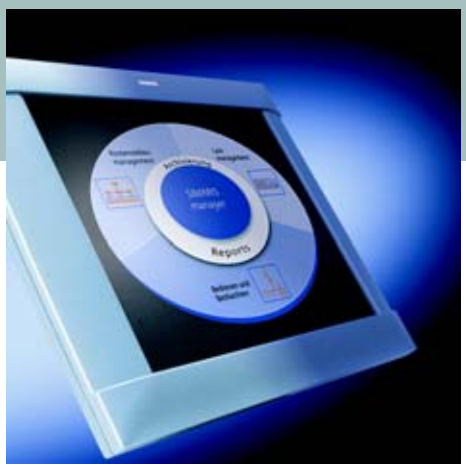

SIMARIS software family

Low-voltage power distribution with SIVACON, SENTRON and SIMARIS

Non-residental buildings and industrial plants have one thing in common: without electricity, everything comes to a halt. The availability, safety and cost effectiveness of the power distribution system is of utmost importance – from the medium voltage supply point through to the socket outlet. And only integrated solutions can ensure maximum efficiency for planning, configuration and operation.

The concept is called Totally Integrated Power from Siemens. Total integration in planning and configuration creates synergies and saves costs. Perfectly interacting products and systems provide efficient engineering and reliable operation. In the field of low-voltage power distribution, the following product families are available:

SIVACON: From the flexible busbar trunking system through to the safe power distribution boards and motor control centers.

SENTRON: From the well-proven switch-disconnector through to intelligent circuit-breakers.

SIMARIS: The software family for planning, parameterizing and managing power distribution.

3VT and 3WT circuit-breakers.
The economic solution.

Today the economic success of industrial and infrastructure projects depends more than ever on the power supply. This is a key aspect to the availability, performance and productivity of all processes and systems, and it also boosts the system's overall economic efficiency. That's why choosing the right circuit-breakers is so crucial to keeping expenses down while, at the same time, optimizing performance.

With the new standard line of 3VT and 3WT circuit-breakers, Siemens offers an economic solution for the entire power range from 10 A to 3,200 A, providing a smart way to protect plants, capacitors, transformers and generators.

Applicable in the infrastructure market as well as in the area of industrial switchgear technology, the 3VT and 3WT circuit-breakers can be used as incoming and outgoing circuit-breakers to distribute energy in low-voltage switchgear.

The 3VT and 3WT circuit-breakers are available in several designs for system and motor protection. Thereby, each circuit-breaker is characterized by its modular design, user-friendliness as well as its high degree of safety and reliability.

Good reasons to choose 3VT and 3WT circuit-breakers:

- **Flexibility**
  - All components can be combined in a modular way
  - Available in 3- or 4-pole version, fixed-mounted, plug-in or withdrawable design
- **Ease of use**
  - User-friendliness in planning, configuration, installation and operation
  - Only a few components cover the entire spectrum from 10 A to 3,200 A
- **Safety and reliability**
  - Conforms to international standards and approvals
  - Compatibility and safe interaction between products and systems

3VT and 3WT circuit-breakers:
The right choice for optimizing your budget

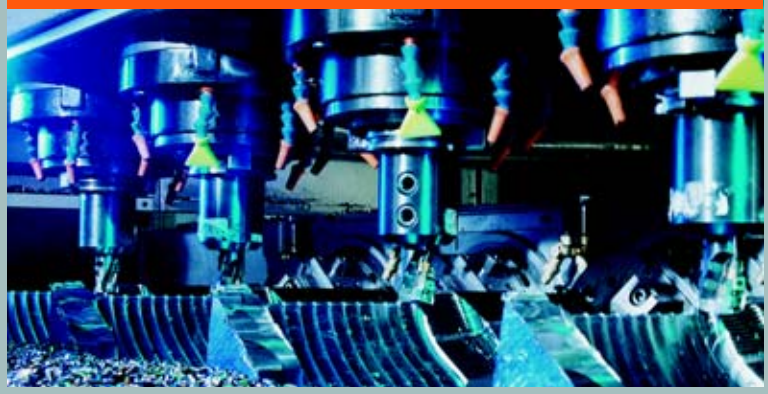

3WT air circuit-breakers

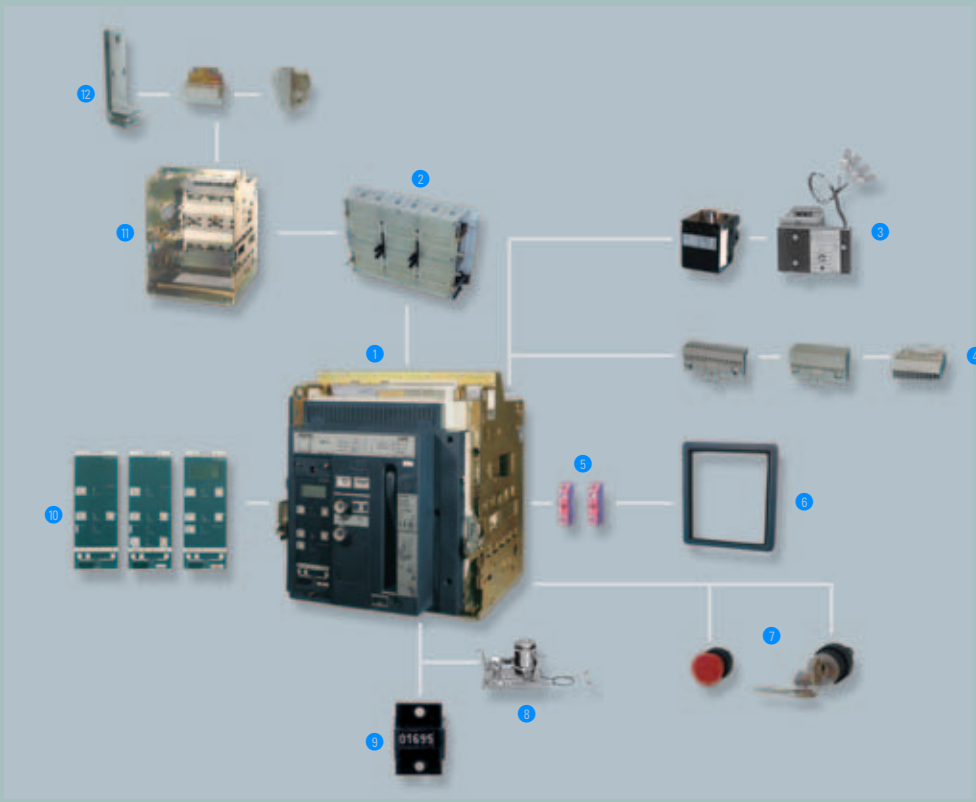

1. 3WT air circuit-breaker
2. Shutter
3. Closing solenoid, auxiliary release
4. Auxiliary conductor plug-in system
5. Auxiliary switch block
6. Door sealing frame
7. EMERGENCY-STOP pushbutton, key operated
8. Motorized operating mechanism
9. Operating cycles counter
10. Electronic trip unit (ETU)
11. Guide frame
12. Main connection front, horizontal, vertical

3VT molded-case circuit breakers

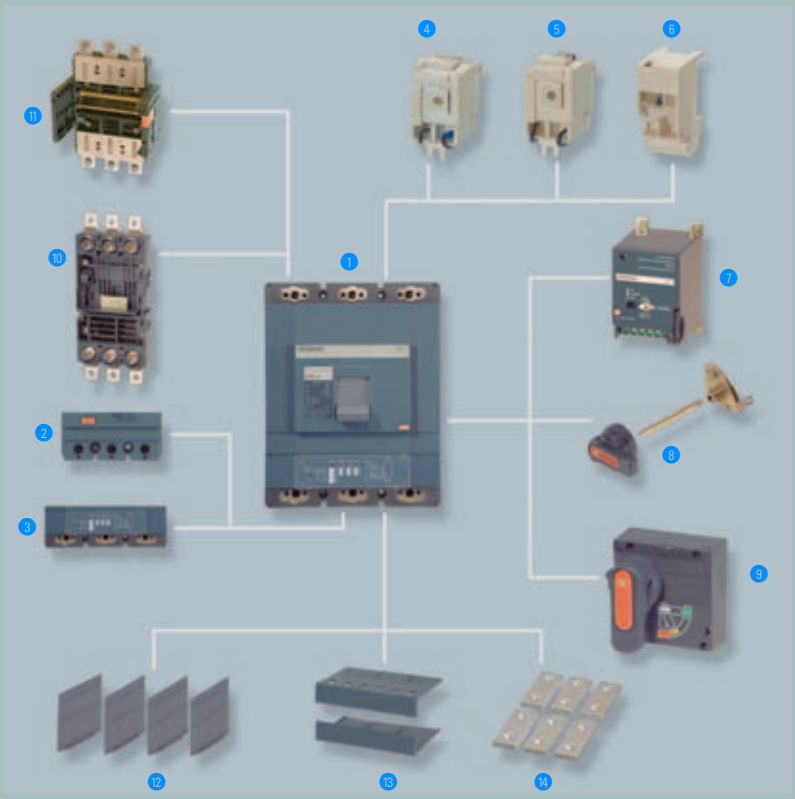

1. 3VT molded-case circuit-breaker
2. Thermal-magnetic overcurrent trip unit
3. Electronic overcurrent trip unit
4. Undervoltage release
5. Shunt release
6. Auxiliary / Alarm switches
7. Motorized operating mechanism
8. Rotary handle operating mechanism
9. Front-operated rotary operating mechanism
10. Plug-in base
11. Withdrawable version
12. Phase barriers
13. Terminal covers
14. Extended front busbar connecting bars

3WT
Air Circuit-Breakers up to 3200 A (AC)

2

2/2	General data
2/16	3- and 4-pole, withdrawable design with guide frame
2/17	3- and 4-pole, fixed-mounted design
2/18	3- and 4-pole, withdrawable design
2/19	3- and 4-pole, fixed-mounted design
2/20	Non-automatic air circuit-breakers, 3- and 4-pole, fixed-mounted and withdrawable design
2/21	Options
2/27	Accessories/spare parts
2/30	Project planning aids

General data

Overview

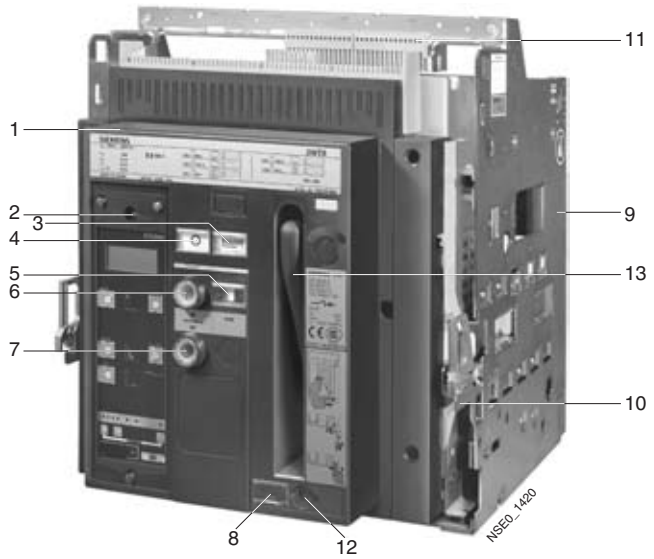

1 Withdrawable circuit-breaker
2 Indication and reset button after tripping for
– tripped signaling switch and
– mechanical closing lockout
3 Spring charge indicator
4 Contact position indicator
5 Ready-to-close indicator
6 ON button, mechanical
7 OFF button, mechanical
8 Indication of switch position
9 Guide frame
10 Guide rails
11 Auxiliary circuit plug-in system
12 Crank hole
13 Hand lever

Left: 3WT circuit-breaker, withdrawable version, size I, 3-pole
Right: 3WT circuit-breaker, fixed-mounted version, size I, 3-pole

Motorized operating mechanism

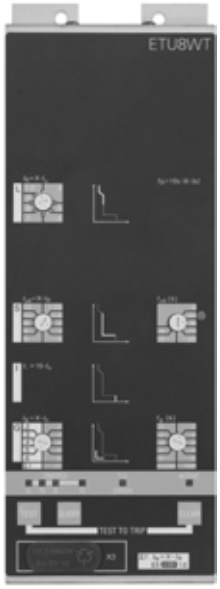

Electronic trip unit

Benefits

Safety and reliability

- High degree of protection with door sealing frame in the case of exclusively local operation of the circuit-breaker
- Incoming supply from above or below, as required
- Locking of the withdrawable circuit-breaker against moving, as standard
- Locking of the guide frame with the circuit-breaker removed, as standard
- Signaling switch for overload and short-circuit tripping with mechanical closing lockout

Easy to operate

- Unambiguous ON-OFF indicator with auxiliary switch for signal
- Ready-to-close indicator with signaling switch as safety standard.

Modular

Many components, such as auxiliary releases, motorized operating mechanisms, electronic trip units and current transformers can be replaced or retrofitted to adapt the circuit-breaker to changing requirements.

Minimal power loss and therefore low energy consumption

The low power consumption of the electrical components also saves money when it comes to purchasing the control-power transformers. Where space is at a premium or ventilation is limited.

Application

Specifications

IEC 60947-2, VDE 0660 Part 101,
GB 14048.2,
CCC Approval,
climate-proof to IEC 60068-2-30,
Approval according to maritime classification
on request.

Operating conditions

The 3WT circuit-breakers are climate-proof in accordance with IEC 60068-2-30.

They are intended for use in enclosed areas where no severe operating conditions (e.g. dust, corrosive vapors, damaging gases) are present.

When installed in dusty or damp areas, suitable enclosures must be provided. If damaging gases (e.g. hydrogen sulfide) are present in the surrounding air, sufficient incoming fresh air must be supplied.

The permissible ambient temperatures and the associated rated currents are listed in the technical specifications.

Design

Versions

Breaking capacity: 50/65 kA
Rated current: 630 to 3200 A
Rated operating voltage: AC 440 V

The 3WT circuit-breakers are supplied complete with an operating mechanism, electronic trip unit and auxiliary switches and are fitted with auxiliary releases.

The non-automatic circuit-breakers are supplied without electronic trip unit

Standard version

- Electronic trip unit for overload protection and short-circuit protection, short-circuit releases also delayed for time-based discrimination, with LEDs for the cause of tripping, LED status indicator, query and test button
- Auxiliary supply connector: The circuit-breaker is equipped with the required number of connectors
- Mechanical ON and OFF pushbutton
- Door sealing frame IP40
- Tripped signaling switch (1 NO)
- Ready-to-close indicator with signaling switch
- Spring charge indicator
- Auxiliary switches (2 NO + 2 NC)
- Rear horizontal main circuit connections for fixed mounted and withdrawable versions
- For 4-pole circuit-breakers, the fourth pole (N) is installed on the left and is 100 % loadable
- Indication and reset button after tripping for
  - tripped signaling switch and
  - mechanical closing lockout
- User manual in Chinese/English

Additional features of the withdrawable design:

- Main contacts:
  Laminated receptacles in the guide frame, penetration blades on the withdrawable circuit-breaker
- Position indicator in the control panel of the withdrawable circuit-breaker
- Guide frame with guide rails for easy moving of the withdrawable circuit-breaker
- The withdrawable circuit-breaker can be locked to prevent it being pushed out of position

Standard version for non-automatic circuit-breaker

- Same features as the circuit-breaker, see "Standard version" but
- No electronic trip unit

General data

Operating mechanisms (see illustration "Motorized operating mechanism")

The circuit-breakers are available with various optional operating mechanisms:

- Manual operating mechanism with memory, with mechanical closing
- Manual operating mechanism with mechanical and electrical closing
- Motorized operating mechanism that can also be operated manually, with mechanical and electrical closing.

The operating mechanisms with electrical closing can be used for synchronization tasks.

Electronic trip units (see illustration "Electronic trip unit")

The electronic trip unit is controlled by a microprocessor and operates independently of an external voltage. It enables systems to be adapted to the different protection requirements of distribution systems, motors, transformers and generators.

When the circuit-breakers are used in IT networks that are not grounded with converters connected in parallel to a common DC link rail, suitable filter measures must be taken. Please address any questions to your regional Siemens contact. For more information on electronic trip units see "Electronic trip units" and "Functions", "Electronic trip units – General description".

EMERGENCY-STOP facility

The 3WT circuit-breakers can be used as an EMERGENCY-STOP facility to DIN VDE 0113 if the circuit-breaker is equipped with an undervoltage release and is used in conjunction with an EMERGENCY-STOP control device.

Auxiliary and signaling switches

- Ready-to-close
  If all the conditions are fulfilled, so that the circuit-breaker is ready to close, this is indicated visually on the operator panel as well as by means of an indicator switch (S7).
- Contact position-independent auxiliary switches
  The circuit-breakers are supplied with 2 NO and 2 NC contacts or with 2 NO and 2 NC and 2 CO contacts according to order.
- "Tripped" signaling switch and mechanical closing lockout
  As standard, the circuit-breaker is equipped with an S11 signaling switch and a mechanical closing lockout for the common overload and short-circuit signal and, depending on the setting and version of the electronic trip unit, the ground-fault signal.
  The tripped signal and the standard mechanical mechanism to prevent closing remain active until the reset button is operated on the circuit-breaker. When the circuit-breaker has tripped, this is indicated by the protruding reset button.
  If the circuit-breaker has to be ready to close immediately after tripping, an automatic mechanical reset mechanism is available, but this does not reset the electrical signal from the "tripped" switch S11. The "tripped" signal then has to be reset by operating the Reset button.

Fixed-mounted and withdrawable version

Fixed-mounted and withdrawable circuit-breakers

- Protective measures against arcing gases
  For 3WT circuit-breakers with voltages up to AC 440 V, screening from vertical busbars is not necessary.
  Electrical add-on devices on the side of the circuit-breaker must be separately covered. Also see notes under "Project planning aids", "Dimensional drawings".
- Operator panel
  The operator panel is designed to protrude from a cutout in the door providing access to all operator controls and displays with the door closed.
- Door sealing frame
  The door sealing frame seals the cabinet door with the operator panel. With the cabinet door closed, the IP degree of protection is achieved for the circuit-breaker.

Withdrawable circuit-breaker

The withdrawable version comprises a withdrawable circuit-breaker, a guide frame and a hand crank for moving the withdrawable circuit-breaker. The guide frames are fitted with guide rails as standard for easy handling of the withdrawable circuit-breaker.

- Auxiliary supply connections
  The auxiliary supply connections make contact automatically when the circuit-breaker slides into the guide frame (test position, connected position).
- Switch positions in the guide frame
  The withdrawable version has three switch positions in the switchgear cabinet behind the cabinet door:
  - Connected position
    (main circuit and auxiliary circuit ready)
  - Test position
    (main circuit disconnected, auxiliary circuit ready)
  - Disconnected position
    (main circuit and auxiliary circuit disconnected)

In the disconnected position, the withdrawable circuit-breaker complies with the "isolation condition" with a visible isolating distance in the main circuit and auxiliary circuit.
The circuit-breaker must always be switched off before it is moved. The "OFF" button must be held down when the slide in the crank hole is opened.

Guide frames

Closing of the crank hole is only possible in the circuit-breaker positions (connected, test or disconnected position). The circuit-breaker position is shown on a display on the circuit-breaker.

The circuit-breaker is moved with the help of a hand crank. The connected position as well as the disconnected position is achieved by moving the circuit-breaker to the end stop.

- Shutters
  Inadvertent touching of live main contacts or busbars is prevented by covering with a shutter. The shutter is constructed in two parts and allows the upper or lower connection areas to be opened separately for the purpose of checking that they are not live. The divided shutter can be interlocked in the open or closed position and two padlocks can be fitted.

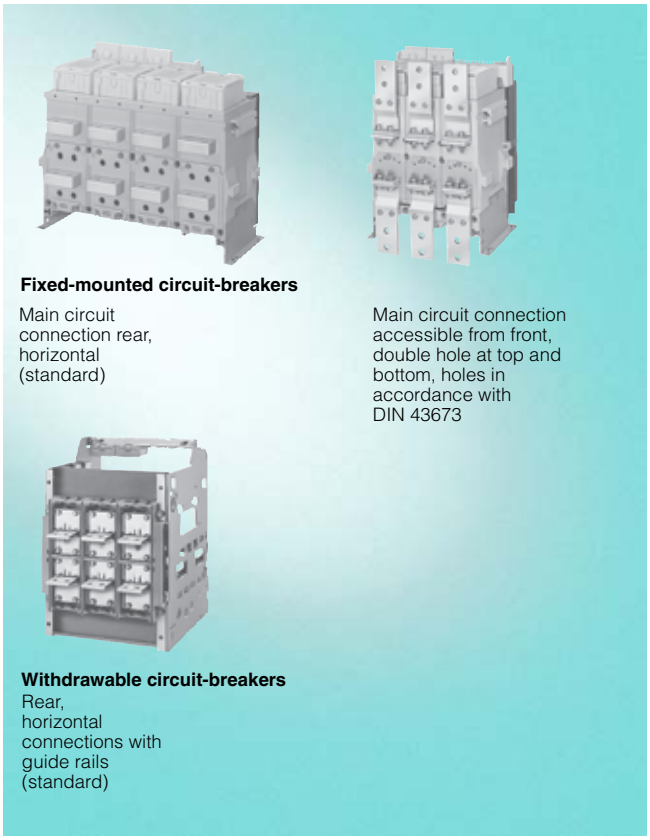

Main circuit connections

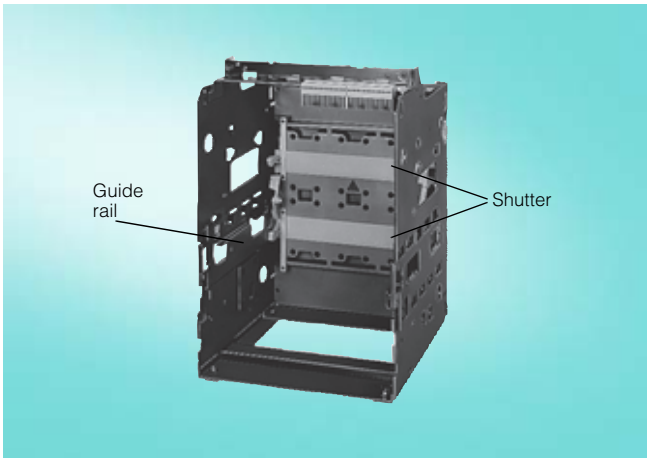

Guide frame

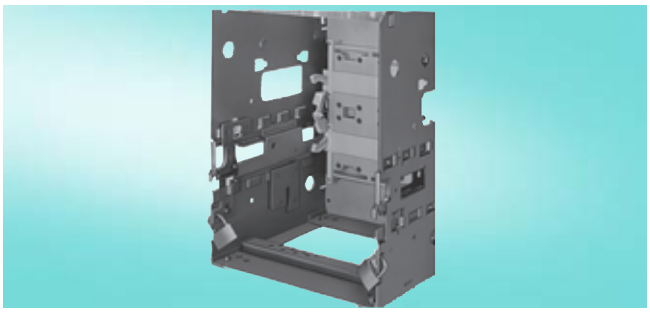

Locking device to prevent insertion of the withdrawable circuit-breaker

General data

Electronic trip units

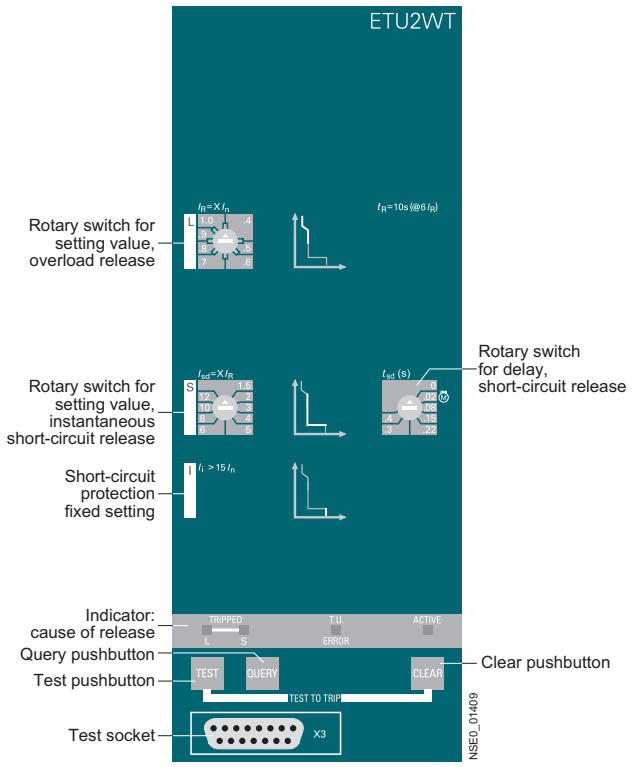

Electronic trip unit version ETU2WT "LSI"

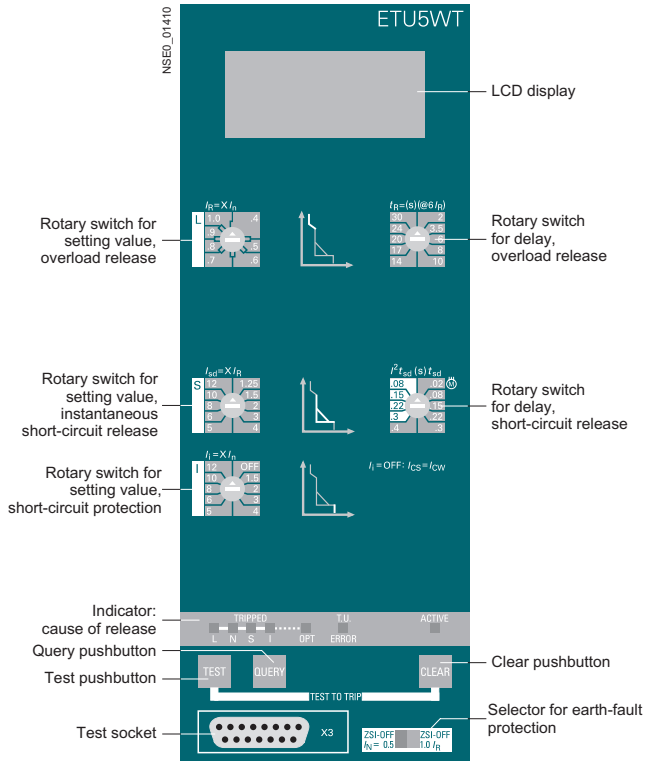

Electronic trip unit version ETU5WT "LSIN" with LCD display

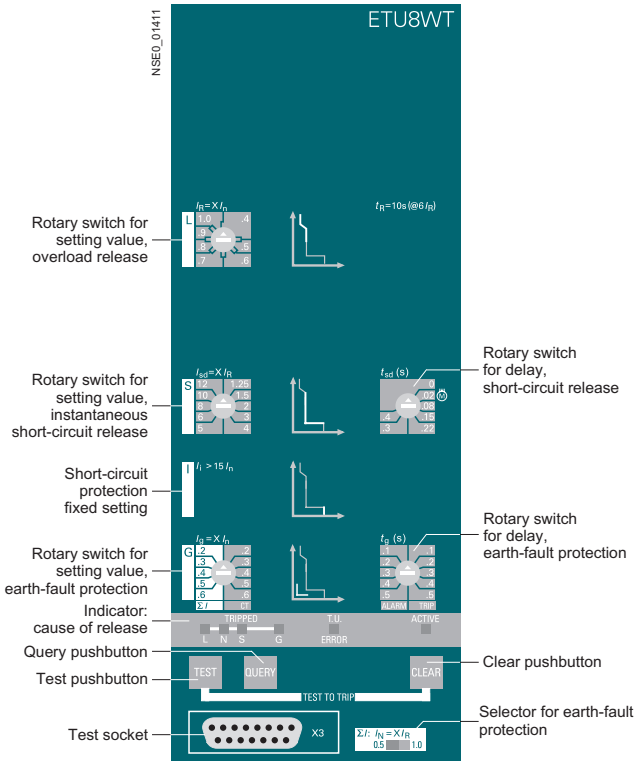

Electronic trip unit version ETU8WT "LSING"

Function

Electronic trip units - General description

The new generation of solid-state microprocessor-based electronic trip units

Overload protection ("L")
Inverse-time delayed overload release for overload protection of load feeders and cables.

NSE0_01126

Selective short-circuit delayed short-circuit protection ("S")

NSE0_01127

Instantaneous short-circuit protection ("I")

NSE0_01128

Ground-fault protection ("G")
For sensing of fault currents that flow to ground and that can cause fire in the plant.

NSE0_01129

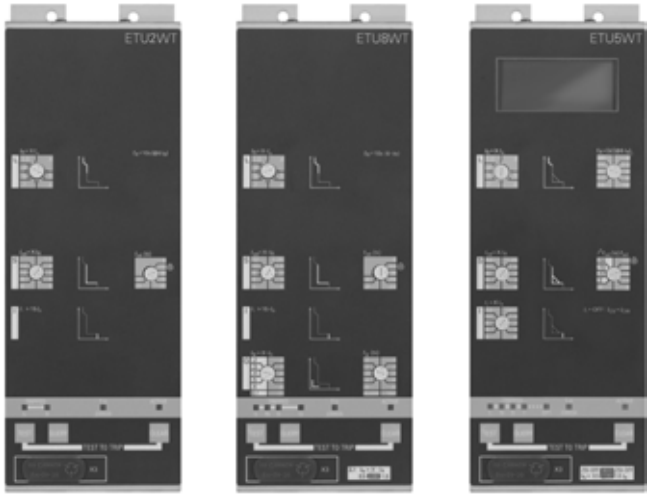

Electronic trip units - versions ETU2WT, ETU8WT, ETU5WT

In all electronic trip units, the following functions are included as standard:

- Integrated function test
  The test button can be used to test the electronic trip unit using an integrated test function with or without tripping of the circuit-breaker (the solid-state trip unit, trip solenoid and breaker mechanism are tested).
- Active LED
  Correct operation of the electronic trip unit is indicated by the "heartbeat" of a green flashing LED.
  When the operating current exceeds the response threshold of the overload protection, this is indicated by rapid flashing.
- Cause of tripping
  The cause of tripping can be queried locally and displayed (by pressing the "Query" button).
- Alarm
  A microprocessor fault is signaled by a warning indicator (also optionally via an optocoupler as well).
- Overtemperature
  If the temperature in the electronic trip unit exceeds 85 °C, it will be indicated by an LED.

General data

Comprehensive additional functions – in accordance with the design of the electronic trip unit, e.g.:

- Short time-delayed short-circuit release with I^2t-dependent delay for improved discrimination to the downstream fuses
- LCD operating current display

Ground-fault protection

- Description
  Ground-fault releases "G" sense fault currents that flow to ground and that can cause fire in the plant. Multiple circuit-breakers connected in series can have their delay times adjusted so as to provide time-graded discrimination.
  The reason for tripping is indicated by means of an LED when the query button is activated.
- Measurement methods
  - Vectorial summation formation with current transformer in neutral conductor
    The neutral conductor current is measured directly and is evaluated for neutral conductor overload protection.
    The electronic trip unit determines the ground-fault current by means of vectorial summation current formation for the three phase currents and the N-conductor current.

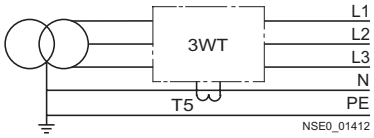

Three-pole circuit-breakers, current transformers in the neutral conductor

Electronic trip unit version	Current transformer T5 must be connected to auxiliary current connection
• ETU5WT, ETU8WT	400.13 400.14

For 4-pole circuit-breakers, the fourth current transformer for the N-conductor is installed internally.

- Direct acquisition of the ground-fault current by means of a current transformer in the grounded neutral point of the transformer. The current transformer is installed directly into the grounded neutral point of the transformer.

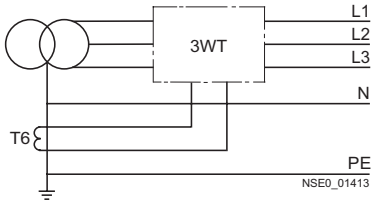

Three-pole circuit-breakers, current transformers in the grounded neutral point of the transformer.

Electronic trip unit version	Current transformer T6 must be connected to auxiliary current connection
• ETU8WT	400.13 400.14

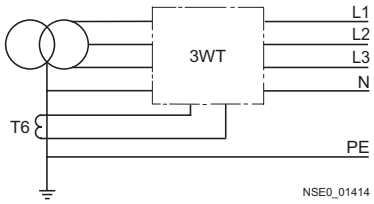

Four-pole circuit-breakers, current transformers in the grounded neutral point of the transformer (connection as for three-pole circuit-breakers)

Hand-held device

- Description
  The hand-held device is connected to the electronic trip unit by means of a connecting lead and a snap-on power supply adapter. A DC 24 V power supply can be connected to the adapter to activate the trip unit. This hand-held device can also be used for the communication-capable motor protection and control device 3UF5 (SIMOCODE-DP) for configuration and operation.
- Functions
  Connecting and setting operating values for the additional functions of the electronic trip unit version ETU5WT.
  The settings read out from the trip unit can be temporarily stored in the hand-held device and written to a different electronic trip unit.

Hand-held device

Opening, closing and locking devices

- ON and OFF buttons
  - Mechanical ON button
    In the standard version, the mechanical ON button is a pushbutton. As an alternative to a pushbutton, a safety lock (CES) can also be supplied.
    If the key is removed in the "0" position, it is no longer possible to close the circuit-breaker mechanically.
  - Mechanical OFF button
    In the standard version, the mechanical OFF button is a pushbutton.
- Locking device against moving the withdrawable circuit-breaker
  Access to the crank hole and application of the crank is prevented by means of one or more padlocks. This also prevents movement of the withdrawable circuit-breaker in the guide frame.
- Auxiliary release
  Up to two auxiliary releases can be installed at the same time.
  The following are available:
  1 shunt release
  or 1 undervoltage release
  or 2 shunt releases
  or 1 shunt release
  + 1 undervoltage release
  The shunt release "f" has been designed for permanent excitation. This means that it is also possible to block the circuit-breaker against being jogged into closing.
  An energy storage device for shunt releases allows the circuit-breaker to be opened even if the control voltage is no longer available.
  The undervoltage release "r" is available without delay as standard (jumper-selectable to 100 ms by customer).
  In addition, the undervoltage release "rc" with a delay in the range from 0.2 to 3.2 s is available.

Undervoltage release "rc" with delay for mounting in 3WT circuit-breaker

General data

Functional overview of the electronic trip unit system

	Function	
Basic functions		
Overload protection 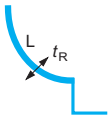 G_NSE0_XX_01397	**Inverse-time delayed overload release "L" for the phases**	Adjustment of the current setting I_R from 40 % to 100 % I_n Graduation 5 % Graduation freely programmable
		Time-lag class t_R = opening time at 6 × I_R, setting t_R
		Thermal image
	for the neutral conductor [1])	Adjustment of the current setting I_n Time-lag class t_R of the neutral conductor as for the phases
Short-circuit protection 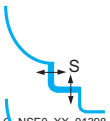 G_NSE0_XX_01398 G_NSE0_XX_01399	**Short-time delayed short-circuit release "S"**	Setting the operating current I_{sd}
		Setting the delay time t_{sd}
		With I^2t_{sd}-dependent delay, delay time t_{sd}
	Instantaneous short-circuit release "I"	Setting the operating current I_i
Ground-fault protection 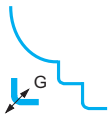 G_NSE0_XX_01400	**Ground-fault release "G"** [1])	Setting the operating current I_g
		Setting the delay time t_g
LCD display	**Operating current indication**	
LED display	**Status indication**	Flashing LED when electronic trip unit activated
	"Tripped" indication	"L" release
		"S/I" release
		"S" release
		"I" release
		"N" release
		"G" release
	Alarm indication	T. U. ERROR
Test	**Internal self-test and display via LED**	
	Connection of the test device to test connector X3	
Basic configuration		
Signal by signaling switch (1 NO)	**Ready-to-close**	Circuit-breaker can be safely closed
	"Tripped" switch	Latching; active after "L", "S", "I", "G" [2]) release with/without mechanical closing lockout

1) With 3-pole circuit-breakers a current transformer is required in addition if there is asymmetrical loading of the phases. In the case of 4-pole circuit-breakers a current transformer in the neutral conductor is fitted internally in the circuit-breaker. For current transformers to be ordered separately see page 2/27.

Electronic trip unit version (≙ 8th position of Order No.)	ETU2WT	ETU8WT	ETU5WT
	●	●	●
	10 s [3])	10 s [3])	2–30 s
			●
		50 or 100 %	50 or 100 %
	1.5–12×I_R	1.25–12×I_R	1.25–12×I_R
	0; 20–400 ms	0; 20–400 ms	20–400 ms
			80–300 ms
	>15×I_n	>15×I_n	>1.5–12×I_n and $I_i=\infty$ with setting $I_i=\infty$ then $I_{cu}=I_{cs}=I_{cw}$ (lowest value decisive)
		0.2–0.6×I_n	
		100–500 ms	
			●
	●	●	●
	●	●	●
	●	●	
			●
			●
		●	●
		●	
	●	●	●
	●	●	●
	●	●	●
	●	●	●
	●	●	●

2) "G" release occurs with "Trip" setting on the electronic trip unit.

3) Where there is heavy starting of motors, the time setting t_R = 10 s may not be sufficient: use version ETU5WT.

● Function available as standard

General data

Module for mutual mechanical interlocking

The module for mutual mechanical interlocking can be used for one or two 3WT circuit-breakers and can be adapted easily to the corresponding versions.
The fixed-mounted and withdrawable circuit-breaker versions are fully compatible and can therefore be used in a mixed configuration in an installation.
The circuit-breakers can be mounted alongside each other or one above the other, whereby the spacing of the circuit-breakers is determined solely by the length of the Bowden cable. The Bowden cables are supplied in standard lengths of 2 m. Interlock signals are looped through via the Bowden cables. Interlocking is only effective in the connected position in the case of withdrawable circuit-breakers.
The mechanical lifetime of the Bowden cables is 8000 operating cycles.
The interlocking module is mounted on the right-hand side of the fixed-mounted circuit-breaker (see illustration) or the guide frame.

3WT circuit-breaker, 3-pole, with interlocking module and Bowden wire

Interlocking module with Bowden wire

Example	Version	Switch status	Description
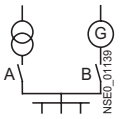	1	A B 0 0 1 0 0 1	2 circuit-breakers alongside each other: One circuit-breaker can only be closed when the other has been switched off. Each circuit-breaker has an interlocking module and a Bowden wire.
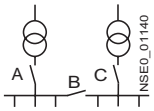	2	A B C 0 0 0 1 0 0 0 1 0 0 0 1 1 1 0 0 1 1 1 0 1	3 circuit-breakers one above the other: Any two circuit-breakers can always be closed, with the third one being interlocked. Each circuit-breaker has an interlocking module and a Bowden wire. An additional Bowden wire must be ordered separately for each circuit-breaker.
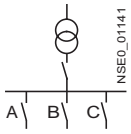	3	A B C 0 0 0 1 0 0 0 1 0 0 0 1	3 circuit-breakers one above the other: When one circuit-breaker is closed the other two circuit-breakers cannot be closed. The interlocking mechanism of each circuit-breaker consists of an interlocking module and a Bowden wire. An additional Bowden wire must be ordered separately for each circuit-breaker.
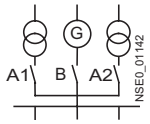	4	A1 B A2 0 0 0 1 0 0 0 0 1 1 0 1 0 1 0	3 circuit-breakers alongside each other: Two circuit-breakers can be closed and opened independently of each other, while the third is only ready to close when the two others are open. If the third circuit-breaker is closed, the other two circuit-breakers cannot be closed. All three circuit-breakers each have an interlocking module and a Bowden wire. A Bowden wire must be ordered separately.

Technical specifications

Size				I					II		
Type				**3WT8 06**	**3WT8 08**	**3WT8 10**	**3WT8 12**	**3WT8 16**	**3WT8 20**	**3WT8 25**	**3WT8 32**
Rated current I_n at 40 °C, at 50/60 Hz	Main conductor		A	630	800	1000	1250	1600	2000	2500	3200
	Neutral conductor (only on 4-pole version)		A	630	800	1000	1250	1600	2000	2500	3200
Rated operating voltage U_e at 50/60 Hz			AC V	up to 440							
Rated impulse withstand voltage U_{imp}	Main circuits [6])		kV	8							
	Auxiliary circuits		kV	4							
Utilization category				B							
Rated short-circuit making capacity I_{cm} (peak value)	up to AC 440 V		kA	110					143		
Rated service short-circuit breaking capacity I_{cs} (rms value)	up to AC 440 V		kA	50					65		
Rated ultimate short-circuit breaking capacity I_{cu} (rms value)	up to AC 440 V		kA	50					65		
Permissible ambient temperatures	Operation		°C	–20 ... +70							
	Storage		°C	–40 ... +80							
Rated short-time withstand current I_{cw} at 50/60 Hz	0.5 s		kA	50				50	60		
	1 s		kA	35 [1])/50				50	60		
	2 s		kA	25 [1])/30				30	55		
	3 s		kA	20 [1])/25				25	45		
	4 s		kA	17 [1])/20				20	35		
Permissible load for fixed-mounted and withdrawable circuit-breakers at cabinet interior temperature [2])[3])	up to 40 °C		A	630	800	1000	1250	1600	2000	2500	3200
	at 55 °C		A	600	700	850	1000	1400	1800	2000	2700
Rated rotor operating voltage U_{er}			V	2000							
Power loss at I_n with 3-phase symmetr. load (without line-side busbars and metal components [3])	Fixed-mounted circuit-breaker		W	40	60	90	120	140	170	325	420
	Withdrawable circuit-breaker including guide frame		W	80	130	205	255	310	310	535	760
Service life without maintenance	mechanical	Operating cycles		8000					6000		
	electrical [5])			5000					2000		
with maintenance [4])	mechanical	Operating cycles		16000					12000		
	electrical [5])			10000					4000		
Operating frequency			1/min	1							
Minimum interval between tripping operation by electronic trip unit and next making operation of the circuit-breaker (only with automatic mechanical resetting of the lockout device)			ms	80							
Service position				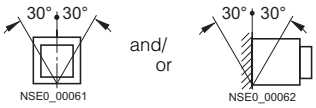							
Degree of protection				Circuit-breaker IP20, when fitted in cabinet or frame Operator panel with door sealing frame IP40							
Main conductor minimum cross-sections	Copper bars, bare		Qty, mm²	1 × 50 × 10	1 × 60 × 10	2 × 40 × 10	2 × 60 × 10	2 × 60 × 10	2 × 100 × 10	3 × 100 × 10	3 × 100 × 10
	Copper bars, painted black		Qty, mm²	1 × 40 × 10	1 × 50 × 10	1 × 60 × 10	2 × 40 × 10	2 × 50 × 10	2 × 80 × 10	2 × 100 × 10	3 × 100 × 10
Auxiliary conductors (Cu)	Max. no. of aux. conductors × cross-section	solid and finely stranded with end sleeves		1 × 0.5 ... 2.5 mm²; 1 × AWG 14 2 ×1.0 mm²							
Weights	3-pole circuit-breakers	Fixed-mounted circuit-breaker approx. kg		34	34	34	34	36	57	57	61
		Withdrawable circuit-breaker approx. kg		36	36	36	36	38	59	59	63
		Guide frame approx. kg		22	22	22	22	23	35	35	37
	4-pole circuit-breakers	Fixed-mounted circuit-breaker approx. kg		47	47	47	47	49	70	70	74
		Withdrawable circuit-breaker approx. kg		49	49	49	49	51	72	72	76
		Guide frame approx. kg		27	27	27	27	28	46	46	48

1) Ecoline.
2) The temperatures apply to the air surrounding the upper third of the circuit-breaker.
3) These values apply in the case of sinusoidal current (50/60 Hz). The heating/losses increase in the event of harmonics and higher frequencies.
4) Maintenance: replacement of the contact set.
5) Per contact set. Disconnect. of the rated current I_n and power factor = 0.8.
6) Rated insulation voltage U_i = AC 1000 V.

General data

Operating mechanisms

Manual operating mechanism with mechanical closing				
Closing Charging stored-energy feature	Max. force required to operate the hand lever Required number of strokes on the hand lever		N	210 5
Manual operating mechanism with mechanical and electrical closing				
Charging stored-energy feature				see "Manual operating mechanism with mechanical closing"
Closing solenoid (Y1)	Operating range			0.7 ... 1.1 × U_s
	Extended operating range for battery operation [1])	for DC 24 V, DC 110 V, DC 220 V		0.7 ... 1.26 × U_s
	Power input	AC/DC	VA/W	15
	Minimum command duration at U_s for the activation solenoid		ms	60
	Total closing time at U_s after start of closing command for the activation solenoid, suitable for synchronizing tasks		ms	80
	Short-circuit protection Smallest permissible DIAZED fuse (operational class gL)/miniature circuit-breaker with C-characteristic			1 A TDz (time-lag)/1 A
Manual/motor operating mechanism with mechanical and electrical closing				
Manual operating mechanism				see "Manual operating mechanism with mechanical closing"
Motor	Operating range			0.7 ... 1.1 × U_s
	Extended operating range for battery operation [1])	for DC 24 V, DC 110 V, DC 220 V		0.7 ... 1.26 × U_s
	Power input to motor	AC/DC	VA/W	40
	Time required to charge the stored-energy mechanism 1 × U_s		s	20
Closing solenoid				see "Manual operating mechanism with mechanical and electrical closing"
	Short-circuit protection			
	Motor and activation solenoid for the same rated control supply voltages:			
For motor and closing solenoid	Smallest permissible DIAZED fuse (operational class gL)/miniature circuit-breaker with C-characteristic	at U_s = 24 V		2 A TDz (time-lag)/2 A
		at U_s = 110–127 V		1 A TDz (time-lag)/1 A
		at U_s = 220–250 V		1 A TDz (time-lag)/1 A

Auxiliary releases

Shunt release "f" (F1, F2)	Operating value	pickup		≥ 0.7 × U_s (circuit-breaker is tripped)
	Operating range			0.7 ... 1.1 × U_s
	For continuous command (100 % duty ratio), locks out on momentary-contact commands			
	Extended operating range for battery operation [1])	for DC 24 V, DC 110 V, DC 220 V		0.7 ... 1.26 × U_s
	Rated control supply voltage U_s	AC 50/60 Hz DC	V V	110–127, 220–240 24, 110–125, 220–250
	Power input	AC/DC	VA/W	15
	Minimum command duration at U_s		ms	60
	Opening time of circuit-breaker at U_s = 100 %	AC/DC	ms	≤ 80

1) The operating range is only permissible for the specified rated voltages and corresponds to the battery charging voltage.

Auxiliary releases

Undervoltage release "r" (F3) and "rc" (F8)	Operating values	pickup dropout		≥ 0.85 × U_s (circuit-breaker can be closed) (0.35 ... 0.7) × U_s (circuit-breaker is tripped)
	Operating range			0.85 ... 1.1 × U_s
	Extended operating range in battery operation [1])	for DC 24 V, DC 110 V, DC 220 V		0.7 ... 1.26 × U_s
	Rated control supply voltage U_s	AC 50/60 Hz DC	V V	110–127, 220–240, 380–415 24, 110–125, 220–250
	Power input	AC DC	VA W	15 15
	Opening time of circuit-breaker at U_s = 0			
	Design "r" (F3) Instantaneous With 100 ms delay		 ms ms	 ≤ 100 ≤ 300
	Design "rc" (F8) With delay, t_d = 0.2 ... 3.2 s		 s	 0.2 ... 3.2
	Reset via additional NC contact – direct switching-off		ms	≤ 100
	Short-circuit protection			
	Smallest permissible DIAZED fuse (operational class gL) /miniature circuit-breaker with C-characteristic			1 A TDz (time-lag)1 A

Contact position-driven auxiliary switches (S1, S2, S3, S4)

Rated insulation voltage U_i			AC/DC V	400 V			
Rated operating voltage U_e				400 V			
Switching capacity	AC, 50/60 Hz	Rated operating voltage U_e Rated operating current I_e/AC-12 Rated operating current I_e/AC-15	V A A	up to 24 10 6	110 10 6	220/230 10 6	380/400 10 4
	DC	Rated operating voltage U_e Rated operating current I_e/DC-12 Rated operating current I_e/DC-13	V A A	24 10 10	110 3.5 1.2	220 1 0.4	
Short-circuit protection [2])		Largest permissible DIAZED fuse (operational class gL/gG) Largest permissible miniature circuit-breaker with C-characteristic		10 A TDz, 16 A Dz 10 A			

Ready-to-close signaling switch (S7) and "tripped" signaling switch (S11), to DIN VDE 0630

Switching capacity	AC, 50/60 Hz	Rated operating voltage U_e Rated operating current I_e	V A	110 0.14	220 0.1
	DC	Rated operating voltage U_e Rated operating current I_e	V A	24 0.2	220 0.1
Short-circuit protection [2])		Largest permissible DIAZED fuse (operational class gL)		2 A Dz (quick)	
"Tripped" signaling switch (S11)		Signal duration after tripping		continuous, until reset	

Electronic trip unit signals

Electronic trip unit signals via optocoupler	T. U. ERROR, leading tripped signaling "L", "G" alarm, Zone Selective Interlocking, load monitoring. After activation of the electronic trip unit it sends a signal (contactless) via optocoupler. Max. rated operating voltage U_e Max. rated operating current U_e	 DC V DC mA	 24 20

Transfer control device

	Degree of protection	IP40
	Weight	approx. 10 kg
	Voltage deviation	0 ... 0.55 × U_e
	Frequency deviation	not monitored
	Contact transfer time	200 ms + T1 adjustable (1.5 s ... 30 s)
	Switchover time	200 ms
	Return transfer time	200 ms + T2 adjustable (5 s ... 100 s)
	Break-time	65 ms
	Ambient temperature	–25 ... +55 °C
	Storage temperature	–50 ... +80 °C

1) The operating range is only permissible for the specified rated voltages and corresponds to the battery charging voltage.

2) Without any welding of the contacts only at I_k ≤ 1 kA in accordance with DIN VDE 0660 Part 200.

3- and 4-pole, withdrawable design with guide frame

Selection and ordering data – quick selection

Size	Rated current I_n A	Short-circuit breaking capacity I_{cu} /440 V kA	Short-time withstand current, I_{cw} /440 V 1 s kA	3-pole Order No.	Basic price	Weight approx. kg	4-pole Order No.	Basic price	Weight approx. kg
ETU2WT, horizontal main circuit-connection (ecoline)									
I	630	50	35	**3WT80 60-1UG04-5AB2**		58.000	**3WT80 64-1UG04-5AB2**		76.000
I	800	50	35	**3WT80 80-1UG04-5AB2**		58.000	**3WT80 84-1UG04-5AB2**		76.000
I	1000	50	35	**3WT81 00-1UG04-5AB2**		58.000	**3WT81 04-1UG04-5AB2**		76.000
I	1250	50	35	**3WT81 20-1UG04-5AB2**		58.000	**3WT81 24-1UG04-5AB2**		76.000
ETU2WT, horizontal main circuit-connection									
I	630	50	50	**3WT80 61-1UG04-5AB2**		58.000	**3WT80 65-1UG04-5AB2**		76.000
I	800	50	50	**3WT80 81-1UG04-5AB2**		58.000	**3WT80 85-1UG04-5AB2**		76.000
I	1000	50	50	**3WT81 01-1UG04-5AB2**		58.000	**3WT81 05-1UG04-5AB2**		76.000
I	1250	50	50	**3WT81 21-1UG04-5AB2**		58.000	**3WT81 25-1UG04-5AB2**		76.000
I	1600	50	50	**3WT81 61-1UG04-5AB2**		61.000	**3WT81 65-1UG04-5AB2**		79.000
II	2000	65	60	**3WT82 02-1UG04-5AB2**		94.000	**3WT82 06-1UG04-5AB2**		118.000
II	2500	65	60	**3WT82 52-1UG04-5AB2**		94.000	**3WT82 56-1UG04-5AB2**		118.000
II	3200	65	60	**3WT83 22-1UG04-5AB2**		100.000	**3WT83 26-1UG04-5AB2**		124.000
ETU8WT, horizontal main circuit connection (ecoline)									
I	630	50	35	**3WT80 60-2UG04-5AB2**		58.000	**3WT80 64-2UG04-5AB2**		76.000
I	800	50	35	**3WT80 80-2UG04-5AB2**		58.000	**3WT80 84-2UG04-5AB2**		76.000
I	1000	50	35	**3WT81 00-2UG04-5AB2**		58.000	**3WT81 04-2UG04-5AB2**		76.000
I	1250	50	35	**3WT81 20-2UG04-5AB2**		58.000	**3WT81 24-2UG04-5AB2**		76.000
ETU8WT, horizontal main circuit connection									
I	630	50	50	**3WT80 61-2UG04-5AB2**		58.000	**3WT80 65-2UG04-5AB2**		76.000
I	800	50	50	**3WT80 81-2UG04-5AB2**		58.000	**3WT80 85-2UG04-5AB2**		76.000
I	1000	50	50	**3WT81 01-2UG04-5AB2**		58.000	**3WT81 05-2UG04-5AB2**		76.000
I	1250	50	50	**3WT81 21-2UG04-5AB2**		58.000	**3WT81 25-2UG04-5AB2**		76.000
I	1600	50	50	**3WT81 61-2UG04-5AB2**		61.000	**3WT81 65-2UG04-5AB2**		79.000
II	2000	65	60	**3WT82 02-2UG04-5AB2**		94.000	**3WT82 06-2UG04-5AB2**		118.000
II	2500	65	60	**3WT82 52-2UG04-5AB2**		94.000	**3WT82 56-2UG04-5AB2**		118.000
II	3200	65	60	**3WT83 22-2UG04-5AB2**		100.000	**3WT83 26-2UG04-5AB2**		124.000
ETU5WT, horizontal main circuit-connection (ecoline)									
I	630	50	35	**3WT80 60-3UG04-5AB2**		58.000	**3WT80 64-3UG04-5AB2**		76.000
I	800	50	35	**3WT80 80-3UG04-5AB2**		58.000	**3WT80 84-3UG04-5AB2**		76.000
I	1000	50	35	**3WT81 00-3UG04-5AB2**		58.000	**3WT81 04-3UG04-5AB2**		76.000
I	1250	50	35	**3WT81 20-3UG04-5AB2**		58.000	**3WT81 24-3UG04-5AB2**		76.000
ETU5WT, horizontal main circuit-connection									
I	630	50	50	**3WT80 61-3UG04-5AB2**		58.000	**3WT80 65-3UG04-5AB2**		76.000
I	800	50	50	**3WT80 81-3UG04-5AB2**		58.000	**3WT80 85-3UG04-5AB2**		76.000
I	1000	50	50	**3WT81 01-3UG04-5AB2**		58.000	**3WT81 05-3UG04-5AB2**		76.000
I	1250	50	50	**3WT81 21-3UG04-5AB2**		58.000	**3WT81 25-3UG04-5AB2**		76.000
I	1600	50	50	**3WT81 61-3UG04-5AB2**		61.000	**3WT81 65-3UG04-5AB2**		79.000
II	2000	65	60	**3WT82 02-3UG04-5AB2**		94.000	**3WT82 06-3UG04-5AB2**		118.000
II	2500	65	60	**3WT82 52-3UG04-5AB2**		94.000	**3WT82 56-3UG04-5AB2**		118.000
II	3200	65	60	**3WT83 22-3UG04-5AB2**		100.000	**3WT83 26-3UG04-5AB2**		124.000

Electronic trip unit (ETU)

ETU2WT: protection functions LSI
ETU8WT: protection functions LSING [1])
ETU5WT: protection functions LSIN [1]) with LCD display

Accessories included

Motor operated mechanism,
with mechanical and electrical closing,
motor and closing solenoid 220-240 V AC 50/60 Hz, 220-250 V DC,
Shunt release "F" 220-240 V AC 50/60 Hz, 220-250 V DC
with door sealing frame IP40,
without 2nd auxiliary release,
with auxiliary switch 2 NO + 2 NC,
with shutter

1) Current transformer for overload protection in the neutral conductor and for ground-fault protection must be ordered separately, see page 2/27.

Selection and ordering data – quick selection

Size	Rated current I_n A	Short-circuit breaking capacity I_{cu} /440 V kA	Short-time withstand current, I_{cw} /440 V 1 s kA	3-pole Order No.	Basic price	Weight approx. kg	4-pole Order No.	Basic price	Weight approx. kg
ETU2WT, horizontal main circuit connection (ecoline)									
I	630	50	35	**3WT80 60-1UG00-0AA2**		34.000	**3WT80 64-1UG00-0AA2**		47.000
I	800	50	35	**3WT80 80-1UG00-0AA2**		34.000	**3WT80 84-1UG00-0AA2**		47.000
I	1000	50	35	**3WT81 00-1UG00-0AA2**		34.000	**3WT81 04-1UG00-0AA2**		47.000
I	1250	50	35	**3WT81 20-1UG00-0AA2**		34.000	**3WT81 24-1UG00-0AA2**		47.000
ETU2WT, horizontal main circuit connection									
I	630	50	50	**3WT80 61-1UG00-0AA2**		34.000	**3WT80 65-1UG00-0AA2**		47.000
I	800	50	50	**3WT80 81-1UG00-0AA2**		34.000	**3WT80 85-1UG00-0AA2**		47.000
I	1000	50	50	**3WT81 01-1UG00-0AA2**		34.000	**3WT81 05-1UG00-0AA2**		47.000
I	1250	50	50	**3WT81 21-1UG00-0AA2**		34.000	**3WT81 25-1UG00-0AA2**		47.000
I	1600	50	50	**3WT81 61-1UG00-0AA2**		36.000	**3WT81 65-1UG00-0AA2**		49.000
II	2000	65	60	**3WT82 02-1UG00-0AA2**		57.000	**3WT82 06-1UG00-0AA2**		70.000
II	2500	65	60	**3WT82 52-1UG00-0AA2**		57.000	**3WT82 56-1UG00-0AA2**		70.000
II	3200	65	60	**3WT83 22-1UG00-0AA2**		61.000	**3WT83 26-1UG00-0AA2**		74.000
ETU8WT, horizontal main circuit connection (ecoline)									
I	630	50	35	**3WT80 60-2UG00-0AA2**		34.000	**3WT80 64-2UG00-0AA2**		47.000
I	800	50	35	**3WT80 80-2UG00-0AA2**		34.000	**3WT80 84-2UG00-0AA2**		47.000
I	1000	50	35	**3WT81 00-2UG00-0AA2**		34.000	**3WT81 04-2UG00-0AA2**		47.000
I	1250	50	35	**3WT81 20-2UG00-0AA2**		34.000	**3WT81 24-2UG00-0AA2**		47.000
ETU8WT, horizontal main circuit connection									
I	630	50	50	**3WT80 61-2UG00-0AA2**		34.000	**3WT80 65-2UG00-0AA2**		47.000
I	800	50	50	**3WT80 81-2UG00-0AA2**		34.000	**3WT80 85-2UG00-0AA2**		47.000
I	1000	50	50	**3WT81 01-2UG00-0AA2**		34.000	**3WT81 05-2UG00-0AA2**		47.000
I	1250	50	50	**3WT81 21-2UG00-0AA2**		34.000	**3WT81 25-2UG00-0AA2**		47.000
I	1600	50	50	**3WT81 61-2UG00-0AA2**		36.000	**3WT81 65-2UG00-0AA2**		49.000
II	2000	65	60	**3WT82 02-2UG00-0AA2**		57.000	**3WT82 06-2UG00-0AA2**		70.000
II	2500	65	60	**3WT82 52-2UG00-0AA2**		57.000	**3WT82 56-2UG00-0AA2**		70.000
II	3200	65	60	**3WT83 22-2UG00-0AA2**		61.000	**3WT83 26-2UG00-0AA2**		74.000
ETU5WT, horizontal main circuit connection (ecoline)									
I	630	50	35	**3WT80 60-3UG00-0AA2**		34.000	**3WT80 64-3UG00-0AA2**		47.000
I	800	50	35	**3WT80 80-3UG00-0AA2**		34.000	**3WT80 84-3UG00-0AA2**		47.000
I	1000	50	35	**3WT81 00-3UG00-0AA2**		34.000	**3WT81 04-3UG00-0AA2**		47.000
I	1250	50	35	**3WT81 20-3UG00-0AA2**		34.000	**3WT81 24-3UG00-0AA2**		47.000
ETU5WT, horizontal main circuit connection									
I	630	50	50	**3WT80 61-3UG00-0AA2**		34.000	**3WT80 65-3UG00-0AA2**		47.000
I	800	50	50	**3WT80 81-3UG00-0AA2**		34.000	**3WT80 85-3UG00-0AA2**		47.000
I	1000	50	50	**3WT81 01-3UG00-0AA2**		34.000	**3WT81 05-3UG00-0AA2**		47.000
I	1250	50	50	**3WT81 21-3UG00-0AA2**		34.000	**3WT81 25-3UG00-0AA2**		47.000
I	1600	50	50	**3WT81 61-3UG00-0AA2**		36.000	**3WT81 65-3UG00-0AA2**		49.000
II	2000	65	60	**3WT82 02-3UG00-0AA2**		57.000	**3WT82 06-3UG00-0AA2**		70.000
II	2500	65	60	**3WT82 52-3UG00-0AA2**		57.000	**3WT82 56-3UG00-0AA2**		70.000
II	3200	65	60	**3WT83 22-3UG00-0AA2**		61.000	**3WT83 26-3UG00-0AA2**		74.000

Electronic trip unit (ETU)

ETU2WT: protection functions LSI
ETU8WT: protection functions LSING [1])
ETU5WT: protection functions LSIN [1]) with LCD display

Accessories included

Motor operated mechanism,
with mechanical and electrical closing,
motor and closing solenoid 220-240 V AC 50/60 Hz, 220-250 V DC,
Shunt release "F" 220-240 V AC 50/60 Hz, 220-250 V DC
with door sealing frame IP40,
without 2nd auxiliary release,
with auxiliary switch 2 NO + 2 NC

1) Current transformer for overload protection in the neutral conductor and for ground-fault protection must be ordered separately, see page 2/27.

3- and 4-pole, withdrawable design

Selection and ordering data

Size	Rated current I_n A	Short-circuit breaking capacity I_{cu} /440 V kA	Short-time withstand current, I_{cw} /440 V 1 s kA	3-pole Order No. (Order No. supplement (8th to 11th and 13th to 16th position of Order No.) must be added. For quick selection see below. Further options see pages 2/21 to 2/26.)	Basic price	Weight approx. kg	4-pole Order No. (Order No. supplement (8th to 11th and 13th to 16th position of Order No.) must be added. For quick selection see below. Further options see pages 2/21 to 2/26.)	Basic price	Weight approx. kg
Horizontal main circuit-connection (ecoline)									
I	630	50	35	**3WT80 60-□□□□4-□□□□**		58.000	**3WT80 64-□□□□4-□□□□**		76.000
I	800	50	35	**3WT80 80-□□□□4-□□□□**		58.000	**3WT80 84-□□□□4-□□□□**		76.000
I	1000	50	35	**3WT81 00-□□□□4-□□□□**		58.000	**3WT81 04-□□□□4-□□□□**		76.000
I	1250	50	35	**3WT81 20-□□□□4-□□□□**		58.000	**3WT81 24-□□□□4-□□□□**		76.000
Horizontal main circuit-connection									
I	630	50	50	**3WT80 61-□□□□4-□□□□**		58.000	**3WT80 65-□□□□4-□□□□**		76.000
I	800	50	50	**3WT80 81-□□□□4-□□□□**		58.000	**3WT80 85-□□□□4-□□□□**		76.000
I	1000	50	50	**3WT81 01-□□□□4-□□□□**		58.000	**3WT81 05-□□□□4-□□□□**		76.000
I	1250	50	50	**3WT81 21-□□□□4-□□□□**		58.000	**3WT81 25-□□□□4-□□□□**		76.000
I	1600	50	50	**3WT81 61-□□□□4-□□□□**		61.000	**3WT81 65-□□□□4-□□□□**		79.000
II	2000	65	60	**3WT82 02-□□□□4-□□□□**		94.000	**3WT82 06-□□□□4-□□□□**		118.000
II	2500	65	60	**3WT82 52-□□□□4-□□□□**		94.000	**3WT82 56-□□□□4-□□□□**		118.000
II	3200	65	60	**3WT83 22-□□□□4-□□□□**		100.000	**3WT83 26-□□□□4-□□□□**		124.000
Horizontal main circuit-connection at top, vertical connection at bottom (ecoline)									
I	630	50	35	**3WT80 60-□□□□8-□□□□**		58.000	**3WT80 64-□□□□8-□□□□**		76.000
I	800	50	35	**3WT80 80-□□□□8-□□□□**		58.000	**3WT80 84-□□□□8-□□□□**		76.000
I	1000	50	35	**3WT81 00-□□□□8-□□□□**		58.000	**3WT81 04-□□□□8-□□□□**		76.000
I	1250	50	35	**3WT81 20-□□□□8-□□□□**		58.000	**3WT81 24-□□□□8-□□□□**		76.000
Horizontal main circuit-connection at top, vertical connection at bottom									
I	630	50	50	**3WT80 61-□□□□8-□□□□**		58.000	**3WT80 65-□□□□8-□□□□**		76.000
I	800	50	50	**3WT80 81-□□□□8-□□□□**		58.000	**3WT80 85-□□□□8-□□□□**		76.000
I	1000	50	50	**3WT81 01-□□□□8-□□□□**		58.000	**3WT81 05-□□□□8-□□□□**		76.000
I	1250	50	50	**3WT81 21-□□□□8-□□□□**		58.000	**3WT81 25-□□□□8-□□□□**		76.000
I	1600	50	50	**3WT81 61-□□□□8-□□□□**		61.000	**3WT81 65-□□□□8-□□□□**		79.000
II	2000	65	60	**3WT82 02-□□□□8-□□□□**		94.000	**3WT82 06-□□□□8-□□□□**		118.000
II	2500	65	60	**3WT82 52-□□□□8-□□□□**		94.000	**3WT82 56-□□□□8-□□□□**		118.000
II	3200	65	60	**3WT83 22-□□□□8-□□□□**		100.000	**3WT83 26-□□□□8-□□□□**		124.000
Without guide frame (ecoline; guide frame see page 2/27)									
I	630	50	35	**3WT80 60-□□□□3-□□□□**		36.000	**3WT80 64-□□□□3-□□□□**		49.000
I	800	50	35	**3WT80 80-□□□□3-□□□□**		36.000	**3WT80 84-□□□□3-□□□□**		49.000
I	1000	50	35	**3WT81 00-□□□□3-□□□□**		36.000	**3WT81 04-□□□□3-□□□□**		49.000
I	1250	50	35	**3WT81 20-□□□□3-□□□□**		36.000	**3WT81 24-□□□□3-□□□□**		49.000
Without guide frame (guide frame see page 2/27)									
I	630	50	50	**3WT80 61-□□□□3-□□□□**		36.000	**3WT80 65-□□□□3-□□□□**		49.000
I	800	50	50	**3WT80 81-□□□□3-□□□□**		36.000	**3WT80 85-□□□□3-□□□□**		49.000
I	1000	50	50	**3WT81 01-□□□□3-□□□□**		36.000	**3WT81 05-□□□□3-□□□□**		49.000
I	1250	50	50	**3WT81 21-□□□□3-□□□□**		36.000	**3WT81 25-□□□□3-□□□□**		49.000
I	1600	50	50	**3WT81 61-□□□□3-□□□□**		38.000	**3WT81 65-□□□□3-□□□□**		51.000
II	2000	65	60	**3WT82 02-□□□□3-□□□□**		59.000	**3WT82 06-□□□□3-□□□□**		72.000
II	2500	65	60	**3WT82 52-□□□□3-□□□□**		59.000	**3WT82 56-□□□□3-□□□□**		72.000
II	3200	65	60	**3WT83 22-□□□□3-□□□□**		63.000	**3WT83 26-□□□□3-□□□□**		76.000

	Order No. supplements	Additional price	Order No. supplements	Additional price
Electronic trip unit (ETU; 8th position of Order No.)				
ETU2WT: protection functions LSI	**1**		**1**	
ETU8WT: protection functions LSING [1])	**2**		**2**	
ETU5WT: protection functions LSIN [1]) with LCD display	**3**		**3**	
Operating mechanism, auxiliary release, auxiliary switch (9th to 11th position of Order No., further options see page 2/21)				
Manual operating mechanism, with mechanical closing, without 1st and 2nd auxiliary releases, with auxiliary switch 2 NO + 2 NC	**AA0**	none	**AA0**	none
Accessories (13th to 16th position of Order No., further options see pages 2/22 to 2/26)				
with door sealing frame IP40	**5AA2**	none	**5AA2**	none
with door sealing frame IP40; with shutter — size I, up to 1600 A	[3]) **5AB2**		[3]) **5AB2**	
with door sealing frame IP40; with shutter — size II, 2000 ... 3200 A	[3]) **5AF2**		[3]) **5AF2**	
with door sealing frame IP40; with safety lock device CES instead of OFF button [2]) (key removable in OFF position); with shutter — size I, up to 1600 A				
with door sealing frame IP40; with safety lock device CES instead of OFF button [2]) (key removable in OFF position); with shutter — size II, 2000 ... 3200 A				

1) Current transformer for overload protection in the neutral conductor and for ground-fault protection must be ordered separately, see page 2/27.

2) This disables mechanical or electrical ON commands.

3) Not available for circuit-breakers without guide frame, see also page 2/22.

Selection and ordering data

Size	Rated current I_n A	Short-circuit breaking capacity I_{cu} /440 V kA	Short-time withstand current, I_{cw} /440 V 1 s kA	3-pole Order No. (Order No. supplement (8th to 11th and 13th to 16th position of Order No.) must be added. For quick selection see below. Further options see pages 2/21 to 2/26.)	Basic price	Weight approx. kg	4-pole Order No. (Order No. supplement (8th to 11th and 13th to 16th position of Order No.) must be added. For quick selection see below. Further options see pages 2/21 to 2/26.)	Basic price	Weight approx. kg
Horizontal main circuit connection (ecoline)									
I	630	50	35	**3WT80 60-□□□□0-□□□□**		34.000	**3WT80 64-□□□□0-□□□□**		47.000
I	800	50	35	**3WT80 80-□□□□0-□□□□**		34.000	**3WT80 84-□□□□0-□□□□**		47.000
I	1000	50	35	**3WT81 00-□□□□0-□□□□**		34.000	**3WT81 04-□□□□0-□□□□**		47.000
I	1250	50	35	**3WT81 20-□□□□0-□□□□**		34.000	**3WT81 24-□□□□0-□□□□**		47.000
Horizontal main circuit connection									
I	630	50	50	**3WT80 61-□□□□0-□□□□**		34.000	**3WT80 65-□□□□0-□□□□**		47.000
I	800	50	50	**3WT80 81-□□□□0-□□□□**		34.000	**3WT80 85-□□□□0-□□□□**		47.000
I	1000	50	50	**3WT81 01-□□□□0-□□□□**		34.000	**3WT81 05-□□□□0-□□□□**		47.000
I	1250	50	50	**3WT81 21-□□□□0-□□□□**		34.000	**3WT81 25-□□□□0-□□□□**		47.000
I	1600	50	50	**3WT81 61-□□□□0-□□□□**		36.000	**3WT81 65-□□□□0-□□□□**		49.000
II	2000	65	60	**3WT82 02-□□□□0-□□□□**		57.000	**3WT82 06-□□□□0-□□□□**		70.000
II	2500	65	60	**3WT82 52-□□□□0-□□□□**		57.000	**3WT82 56-□□□□0-□□□□**		70.000
II	3200	65	60	**3WT83 22-□□□□0-□□□□**		61.000	**3WT83 26-□□□□0-□□□□**		74.000

	Order No. supplements			Additional price	Order No. supplements			Additional price
Electronic trip unit (ETU; 8th position of Order No.)								
ETU2WT: protection functions LSI	**1**				**1**			
ETU8WT: protection functions LSING [1])	**2**				**2**			
ETU5WT: protection functions LSIN [1]) with LCD display	**3**				**3**			
Operating mechanism, auxiliary release, auxiliary switch (9th to 11th position of Order No., further options see page 2/21)								
Manual operating mechanism, with mechanical closing, without 1st and 2nd auxiliary releases, with auxiliary switch 2 NO + 2 NC		**AA0**		none		**AA0**		none
Motor operated mechanism, with mechanical and electrical closing, motor and closing solenoid 220-240 V AC 50/60 Hz, 220-250 V DC, Shunt release "F" 220-240 V AC 50/60 Hz, 220-250 V DC, without 2nd auxiliary release, with auxiliary switch 2 NO + 2 NC		**UG0**				**UG0**		
Motor operated mechanism, with mechanical and electrical closing, motor and closing solenoid 220-240 V AC 50/60 Hz, 220-250 V DC, Undervoltage release "r", "F3" 220-240 V AC 50/60 Hz, 220-250 V DC, Shunt release "F" 220-240 V AC 50/60 Hz, 220-250 V DC, with auxiliary switch 2 NO + 2 NC		**UN3**				**UN3**		
Accessories (13th to 16th position of Order No., further options see pages 2/22 to 2/26)								
with door sealing frame IP40			**0AA2**	none			**0AA2**	none
with door sealing frame IP40; with safety lock device CES instead of OFF button [2]) (key removable in OFF position)			**0AB2**				**0AB2**	
with door sealing frame IP40; with safety lock device CES instead of OFF button [2]) (key removable in OFF position); with mutual mechanical interlock for circuit-breaker 3WT			**0AC2**				**0AC2**	

1) Current transformer for overload protection in the neutral conductor and for ground-fault protection must be ordered separately, see page 2/27.

2) This disables mechanical or electrical ON commands.

Non-automatic air circuit-breakers, 3- and 4-pole, fixed-mounted and withdrawable design

Selection and ordering data

Size	Rated current I_n A	3-pole Order No.	Basic price	Weight approx. kg	4-pole Order No.	Basic price	Weight approx. kg
		Order No. supplement (8th to 11th and 13th to 16th position of Order No.) must be added. For quick selection see below. Further options see pages 2/21 to 2/26.			Order No. supplement (8th to 11th and 13th to 16th position of Order No.) must be added. For quick selection see below. Further options see pages 2/21 to 2/26.		
Withdrawable design, horizontal main circuit-connection							
I	1250	**3WT81 20-0□□□4-□□□□**		58.000	**3WT81 24-0□□□4-□□□□**		76.000
I	1600	**3WT81 61-0□□□4-□□□□**		61.000	**3WT81 65-0□□□4-□□□□**		79.000
II	2500	**3WT82 52-0□□□4-□□□□**		94.000	**3WT82 56-0□□□4-□□□□**		118.000
II	3200	**3WT83 22-0□□□4-□□□□**		100.000	**3WT83 26-0□□□4-□□□□**		124.000
Withdrawable design, horizontal main circuit-connection at top, vertical connection at bottom							
I	1250	**3WT81 20-0□□□8-□□□□**		58.000	**3WT81 24-0□□□8-□□□□**		76.000
I	1600	**3WT81 61-0□□□8-□□□□**		61.000	**3WT81 65-0□□□8-□□□□**		79.000
II	2500	**3WT82 52-0□□□8-□□□□**		94.000	**3WT82 56-0□□□8-□□□□**		118.000
II	3200	**3WT83 22-0□□□8-□□□□**		100.000	**3WT83 26-0□□□8-□□□□**		124.000
Withdrawable design without guide frame (guide frame see page 2/27)							
I	1250	**3WT81 20-0□□□3-□□□□**		36.000	**3WT81 24-0□□□3-□□□□**		49.000
I	1600	**3WT81 61-0□□□3-□□□□**		38.000	**3WT81 65-0□□□3-□□□□**		51.000
II	2500	**3WT82 52-0□□□3-□□□□**		59.000	**3WT82 56-0□□□3-□□□□**		72.000
II	3200	**3WT83 22-0□□□3-□□□□**		63.000	**3WT83 26-0□□□3-□□□□**		76.000
Fixed-mounted design, horizontal main circuit connection							
I	1250	**3WT81 20-0□□□0-□□□□**		34.000	**3WT81 24-0□□□0-□□□□**		47.000
I	1600	**3WT81 61-0□□□0-□□□□**		36.000	**3WT81 65-0□□□0-□□□□**		49.000
II	2500	**3WT82 52-0□□□0-□□□□**		57.000	**3WT82 56-0□□□0-□□□□**		70.000
II	3200	**3WT83 22-0□□□0-□□□□**		61.000	**3WT83 26-0□□□0-□□□□**		74.000

Operating mechanism, auxiliary release, auxiliary switch (9th to 11th position of Order No., further options see page 2/21)	Order No. supplements	Additional price	Order No. supplements	Additional price
Manual operating mechanism, with mechanical closing, without 1st and 2nd auxiliary releases, with auxiliary switch 2 NO + 2 NC	**AA0**	none	**AA0**	none
Motor operated mechanism, with mechanical and electrical closing, motor and closing solenoid 220-240 V AC 50/60 Hz, 220-250 V DC, Shunt release "F" 220-240 V AC 50/60 Hz, 220-250 V DC, without 2nd auxiliary release, with auxiliary switch 2 NO + 2 NC	**UG0**		**UG0**	
Fixed-mounted version				
Accessories (13th to 16th position of Order No., further options see pages 2/22 to 2/26)				
with door sealing frame IP40	**0AA2**	none	**0AA2**	none
with door sealing frame IP40; with safety lock device CES instead of OFF button [1]) (key removable in OFF position)	**0AB2**		**0AB2**	
Withdrawable version				
Accessories (13th to 16th position of Order No., further options see pages 2/22 to 2/26)				
with door sealing frame IP40	**5AA2**	none	**5AA2**	none
with door sealing frame IP40; with shutter size I, up to 1600 A, size II, 2000 ... 3200 A	[2]) **5AB2**		[2]) **5AB2**	
with door sealing frame IP40; with safety lock device CES instead of OFF button [1]) (key removable in OFF position); with shutter size I, up to 1600 A, size II, 2000 ... 3200 A	[2]) **5AF2**		[2]) **5AF2**	

"Options" and "Accessories" see "Options" and "Accessories" for "Air-Circuit-Breakers", pages 2/21 to 2/30.

1) This disables mechanical or electrical ON commands.

2) Not available for circuit-breakers without guide frame, see also page 2/22.

Selection and ordering data

Design	Order No. supplement 9th to 11th position of Order No. of circuit-breaker (see pages 2/18 to 2/20) must be added as listed below 3WT8. . .-. ■ ■ ■ .-. . . .	Additional price
Operating mechanism		
Manual operating mechanism, with mechanical closing	**A**	none
Manual operating mechanism, with mechanical and electrical closing		
Closing solenoid AC 50/60 Hz V | DC V		
– | 24	**B**	
110-127 | 110-125	**E**	
220-240 | 220-250	**F**	
Manual/motorized operating mechanism, with mechanical and electrical closing		
Motor: AC 50/60 Hz V | DC V; Closing solenoid: AC 50/60 Hz V | DC V		
– | 24 | 24 | 24	**G**	
110-127 | 110-125 | 110-127 | 110-125	**K**	
220-240 | 220-250 | 220-240 | 220-250	**U**	
1st auxiliary release		
Without 1st auxiliary release	**A**	none
Shunt release "f" F1 AC 50/60 Hz V | DC V		
– | 24	**B**	
110-127 | 110-125	**F**	
220-240 | 220-250	**G**	
Undervoltage release "r" F3 AC 50/60 Hz V | DC V		
– | 24	**H**	
110-127 | 110-125	**M**	
220-240 | 220-250	**N**	
380-415 | –	**P**	
Undervoltage release "rc" F8, can be delayed between 0.2 and 3.2 s AC 50/60 Hz V | DC V		
110-127 | 110-125	**U**	
220-240 | 220-250	**V**	
380-415 | –	**W**	
2nd auxiliary release and auxiliary switch		
Without 2nd auxiliary release — **with 1st auxiliary contact block (standard)** 2 NO + 2 NC	**0**	none
Shunt release "f" F2 — **with 1st auxiliary contact block (standard)** AC 50/60 Hz V | DC V		
– | 24 — 2 NO + 2 NC	**1**	
110-127 | 110-125 — 2 NO + 2 NC	**2**	
220-240 | 220-250 — 2 NO + 2 NC	**3**	
Without 2nd auxiliary release — **with 1st and 2nd auxiliary contact block** 2 NO + 2 NC + 2 CO	**4**	
Shunt release "f" F2 — **with 1st and 2nd auxiliary contact block** AC 50/60 Hz V | DC V		
– | 24 — 2 NO + 2 NC + 2 CO	**5**	
110-127 | 110-125 — 2 NO + 2 NC + 2 CO	**6**	
220-240 | 220-250 — 2 NO + 2 NC + 2 CO	**7**	

Options

Design	Order No. supplement 13th to 16th position of Order No. of circuit-breaker (see pages 2/18 to 2/20) must be added as listed below 3WT8. . .-. . . . . - ■ ■ ■ ■	Additional price 3-pole	4-pole
For withdrawable circuit-breakers without guide frame **With door sealing frame IP40**	**5 A A 2**	none	none
With door sealing frame IP40 **and locking device** With safety lock device CES instead of OFF button [1]) (key removable in OFF position)	**5 A E 2**		
For withdrawable circuit-breakers with guide frame **With door sealing frame IP40**	**5 A A 2**	none	none
With door sealing frame IP40, **sealing cap over OFF button,** **and shutter** Sealing cap to prevent unauthorized opening, cannot be combined with safety lock With shutter Size I, up to 1600 A Size II, 2000 ... 3200 A	**5 A B 2**		
With door sealing frame IP40, **sealing cap over OFF button,** **and mutual mechanical interlock for 3WT circuit-breaker** Sealing cap to prevent unauthorized opening, cannot be combined with safety lock Interlock module with a Bowden wire (2 m); when interlocking three circuit-breakers an additional Bowden wire is required, see page 2/28.	**5 A C 2**		
With door sealing frame IP40, **sealing cap over OFF button,** **mutual mechanical interlock for 3WT circuit-breaker** **and shutter** Sealing cap to prevent unauthorized opening, cannot be combined with safety lock Interlock module with a Bowden wire (2 m); when interlocking three circuit-breakers an additional Bowden wire is required, see page 2/28. With shutter Size I, up to 1600 A Size II, 2000 ... 3200 A	**5 A D 2**		
With door sealing frame IP40 **and locking device** With safety lock device CES instead of OFF button [1]) (key removable in OFF position)	**5 A E 2**		
With door sealing frame IP40, **locking device,** **and shutter** With safety lock device CES instead of OFF button [1]) (key removable in OFF position) With shutter Size I, up to 1600 A Size II, 2000 ... 3200 A	**5 A F 2**		
With door sealing frame IP40 **locking device,** **blocking device** **and mutual mechanical interlock for 3WT circuit-breaker** With safety lock device CES instead of OFF button [1]) (key removable in OFF position) Blocking device to prevent opening of the cabinet door when the circuit-breaker is in connected position Interlock module with a Bowden wire (2 m); when interlocking three circuit-breakers an additional Bowden wire is required, see page 2/28.	**5 A G 2**		
With door sealing frame IP40 **locking device,** **blocking device,** **mutual mechanical interlock for 3WT circuit-breaker** **and shutter** With safety lock device CES instead of OFF button [1]) (key removable in OFF position) Blocking device to prevent opening of the cabinet door when the circuit-breaker is in connected position Interlock module with a Bowden wire (2 m); when interlocking three circuit-breakers an additional Bowden wire is required, see page 2/28. With shutter Size I, up to 1600 A Size II, 2000 ... 3200 A	**5 A H 2**		

1) This disables mechanical or electrical ON commands.

Design	Order No. supplement 13th to 16th position of Order No. of circuit-breaker (see pages 2/18 to 2/20) must be added as listed below 3WT8. . .-. . . . . - ■ ■ ■ ■	Additional price 3-pole	4-pole
For withdrawable circuit-breakers with guide frame			
With door sealing frame IP40 **locking device** **and sealing cap over OFF button** Locking device: mounting set for CASTELL lock [1]), Interlock to be obtained from the manufacturer of the locks CASTELL lock (FS 2) Sealing cap to prevent unauthorized opening, cannot be combined with safety lock	**5 A J 2**		
With door sealing frame IP40 **locking device,** **sealing cap over OFF button,** **and shutter** Locking device: mounting set for CASTELL lock [1]), Interlock to be obtained from the manufacturer of the locks CASTELL lock (FS 2) Sealing cap to prevent unauthorized opening, cannot be combined with safety lock With shutter Size I, up to 1600 A Size II, 2000 ... 3200 A	**5 A K 2**		
With door sealing frame IP40 **locking device,** **blocking device,** **sealing cap over OFF button** **and mutual mechanical interlock for 3WT circuit-breaker** Locking device: mounting set for CASTELL lock [1]), Interlock to be obtained from the manufacturer of the locks CASTELL lock (FS 2) Blocking device to prevent opening of the cabinet door when the circuit-breaker is in connected position Sealing cap to prevent unauthorized opening, cannot be combined with safety lock Interlock module with a Bowden wire (2 m); when interlocking three circuit-breakers an additional Bowden wire is required, see page 2/28.	**5 A L 2**		
With door sealing frame IP40 **locking device,** **blocking device,** **sealing cap over OFF button,** **mutual mechanical interlock for 3WT circuit-breaker** **and shutter** Locking device: mounting set for CASTELL lock [1]), Interlock to be obtained from the manufacturer of the locks CASTELL lock (FS 2) Blocking device to prevent opening of the cabinet door when the circuit-breaker is in connected position Sealing cap to prevent unauthorized opening, cannot be combined with safety lock Interlock module with a Bowden wire (2 m); when interlocking three circuit-breakers an additional Bowden wire is required, see page 2/28. With shutter Size I, up to 1600 A Size II, 2000 ... 3200 A	**5 A M 2**		
With door sealing frame IP40, **sealing cap over OFF button,** **5-digit operating cycles counter** **and shutter** Sealing cap to prevent unauthorized opening, cannot be combined with safety lock With shutter Size I, up to 1600 A Size II, 2000 ... 3200 A	**5 A P 2**		
With door sealing frame IP40 **blocking device,** **sealing cap over OFF button,** **5-digit operating cycles counter** **and mutual mechanical interlock for 3WT circuit-breaker** Blocking device to prevent opening of the cabinet door when the circuit-breaker is in connected position Sealing cap to prevent unauthorized opening, cannot be combined with safety lock Interlock module with a Bowden wire (2 m); when interlocking three circuit-breakers an additional Bowden wire is required, see page 2/28.	**5 A Q 2**		

1) Locks are available at the manufacturer of the locks.

Options

Design	Order No. supplement 13th to 16th position of Order No. of circuit-breaker (see pages 2/18 to 2/20) must be added as listed below 3WT8. . .-. . . . . - ■ ■ ■ ■	Additional price 3-pole	4-pole
For withdrawable circuit-breakers with guide frame			
With door sealing frame IP40 **blocking device,** **sealing cap over OFF button,** **5-digit operating cycles counter** **mutual mechanical interlock for 3WT circuit-breaker,** **and shutter** Blocking device to prevent opening of the cabinet door when the circuit-breaker is in connected position Sealing cap to prevent unauthorized opening, cannot be combined with safety lock Interlock module with a Bowden wire (2 m); when interlocking three circuit-breakers an additional Bowden wire is required, see page 2/28. With shutter Size I, up to 1600 A Size II, 2000 ... 3200 A	**5 A R 2**		
With door sealing frame IP40 **locking device,** **sealing cap over OFF button** **and 5-digit operating cycles counter** Locking device: mounting set for CASTELL lock [1]), Interlock to be obtained from the manufacturer of the locks CASTELL lock (FS 2) Sealing cap to prevent unauthorized opening, cannot be combined with safety lock	**5 A S 2**		
With door sealing frame IP40 **locking device,** **sealing cap over OFF button,** **5-digit operating cycles counter** **and shutter** Locking device: mounting set for CASTELL lock [1]), Interlock to be obtained from the manufacturer of the locks CASTELL lock (FS 2) Sealing cap to prevent unauthorized opening, cannot be combined with safety lock With shutter Size I, up to 1600 A Size II, 2000 ... 3200 A	**5 A T 2**		
With door sealing frame IP40 **locking device,** **blocking device,** **sealing cap over OFF button,** **5-digit operating cycles counter** **and mutual mechanical interlock for 3WT circuit-breaker** Locking device: mounting set for CASTELL lock [1]), Interlock to be obtained from the manufacturer of the locks CASTELL lock (FS 2) Blocking device to prevent opening of the cabinet door when the circuit-breaker is in connected position Sealing cap to prevent unauthorized opening, cannot be combined with safety lock Interlock module with a Bowden wire (2 m); when interlocking three circuit-breakers an additional Bowden wire is required, see page 2/28.	**5 A U 2**		
With door sealing frame IP40 **locking device,** **blocking device,** **sealing cap over OFF button,** **5-digit operating cycles counter** **mutual mechanical interlock for 3WT circuit-breaker** **and shutter** Locking device: mounting set for CASTELL lock [1]), Interlock to be obtained from the manufacturer of the locks CASTELL lock (FS 2) Blocking device to prevent opening of the cabinet door when the circuit-breaker is in connected position Sealing cap to prevent unauthorized opening, cannot be combined with safety lock Interlock module with a Bowden wire (2 m); when interlocking three circuit-breakers an additional Bowden wire is required, see page 2/28. With shutter Size I, up to 1600 A Size II, 2000 ... 3200 A	**5 A V 2**		

1) Locks are available at the manufacturer of the locks.

Design	Order No. supplement 13th to 16th position of Order No. of circuit-breaker (see pages 2/18 to 2/20) must be added as listed below 3WT8. . .-. . . . .- ■ ■ ■ ■	Additional price 3-pole	4-pole
For fixed-mounted circuit-breakers **With door sealing frame IP40**	**0 A A 2**	none	none
With door sealing frame IP40 **and locking device** With safety lock device CES instead of OFF button [1]) (key removable in OFF position)	**0 A B 2**		
With door sealing frame IP40, **sealing cap over OFF button** **and mutual mechanical interlock for 3WT circuit-breaker,** sealing cap to prevent unautorized opening, cannot be combined with safety lock Interlock module with a Bowden wire (2 m); when interlocking three circuit-breakers an additional Bowden wire is required, see page 2/28.	**0 A C 2**		
With door sealing frame IP40, **locking device,** **and mutual mechanical interlock for 3WT circuit-breaker** With safety lock device CES instead of OFF button [1]) (key removable in OFF position) Interlock module with a Bowden wire (2 m); when interlocking three circuit-breakers an additional Bowden wire is required, see page 2/28.	**0 A D 2**		
With door sealing frame IP40, **sealing cap over OFF button,** **blocking device,** **and mutual mechanical interlock for 3WT circuit-breaker** Sealing cap to prevent unauthorized opening, cannot be combined with safety lock Blocking device to prevent opening of the cabinet door with the circuit-breaker closed Interlock module with a Bowden wire (2 m); when interlocking three circuit-breakers an additional Bowden wire is required, see page 2/28.	**0 A E 2**		
With door sealing frame IP40, **locking device,** **blocking device,** **and mutual mechanical interlock for 3WT circuit-breaker** With safety lock device CES instead of OFF button [1]) (key removable in OFF position) Blocking device to prevent opening of the cabinet door with the circuit-breaker closed Interlock module with a Bowden wire (2 m); when interlocking three circuit-breakers an additional Bowden wire is required, see page 2/28.	**0 A F 2**		
With door sealing frame IP40, **locking device,** **and sealing cap over OFF button** Locking device: mounting set for CASTELL lock [2]), Interlock to be obtained from the manufacturer of the locks CASTELL lock (FS 2) Sealing cap to prevent unauthorized opening, cannot be combined with safety lock	**0 A G 2**		
With door sealing frame IP40, **5-digit operating cycles counter,** **locking device,** **sealing cap over OFF button,** **blocking device,** **and mutual mechanical interlock for 3WT circuit-breaker** Locking device: mounting set for CASTELL lock [2]), Interlock to be obtained from the manufacturer of the locks CASTELL lock (FS 2) Sealing cap to prevent unauthorized opening, cannot be combined with safety lock Blocking device to prevent opening of the cabinet door with the circuit-breaker closed Interlock module with a Bowden wire (2 m); when interlocking three circuit-breakers an additional Bowden wire is required, see page 2/28.	**0 A H 2**		
With door sealing frame IP40, **5-digit operating cycles counter,** **sealing cap over OFF button,** **and mutual mechanical interlock for 3WT circuit-breaker** Sealing cap to prevent unauthorized opening, cannot be combined with safety lock Interlock module with a Bowden wire (2 m); when interlocking three circuit-breakers an additional Bowden wire is required, see page 2/28.	**0 A J 2**		

1) This disables mechanical or electrical ON commands.

2) Locks are available at the manufacturer of the locks.

Options

Design	Order No. supplement 13th to 16th position of Order No. of circuit-breaker (see pages 2/18 to 2/20) must be added as listed below 3WT8. . .-. . . . . - ■ ■ ■ ■	Additional price 3-pole	4-pole
For fixed-mounted circuit-breakers			
With door sealing frame IP40, **5-digit operating cycles counter,** **sealing cap over OFF button,** **blocking device,** **and mutual mechanical interlock for 3WT circuit-breaker** Sealing cap to prevent unauthorized opening, cannot be combined with safety lock Blocking device to prevent opening of the cabinet door with the circuit-breaker closed Interlock module with a Bowden wire (2 m); when interlocking three circuit-breakers an additional Bowden wire is required, see page 2/28.	**0 A K 2**		
With door sealing frame IP40, **5-digit operating cycles counter,** **locking device,** **and sealing cap over OFF button** Locking device: mounting set for CASTELL lock [2]), Interlock to be obtained from the manufacturer of the locks CASTELL lock (FS 2) Sealing cap to prevent unauthorized opening, cannot be combined with safety lock	**0 A L 2**		
With door sealing frame IP40, **5-digit operating cycles counter,** **locking device,** **sealing cap over OFF button,** **blocking device,** **and mutual mechanical interlock for 3WT circuit-breaker** With safety lock device CES instead of OFF button [1]) (key removable in OFF position) Locking device: mounting set for CASTELL lock [2]), Interlock to be obtained from the manufacturer of the locks CASTELL lock (FS 2) Blocking device to prevent opening of the cabinet door with the circuit-breaker closed Interlock module with a Bowden wire (2 m); when interlocking three circuit-breakers an additional Bowden wire is required, see page 2/28.	**0 A M 2**		

1) This disables mechanical or electrical ON commands.

2) Locks are available at the manufacturer of the locks.

Selection and ordering data

Size	Rated current I_n A	3-pole Order No.	Price	Weight approx. kg	4-pole Order No.	Price	Weight approx. kg
Guide frame for withdrawable design, horizontal main circuit connection, 2 auxiliary supply connectors							
I I	630 … 1250 1600	**3WT98 83–2AC10** **3WT98 83–4AC10**			**3WT98 83–2AC30** **3WT98 83–4AC30**		
II II	2000 ... 2500 3200	**3WT98 83–6AC10** **3WT98 83–7AC10**			**3WT98 83–6AC30** **3WT98 83–7AC30**		
Guide frame for withdrawable design, horizontal main circuit connection at top, vertical connection at bottom, 2 auxiliary supply connectors							
I I	630 … 1250 1600	**3WT98 83–2BC10** **3WT98 83–4BC10**			**3WT98 83–2BC30** **3WT98 83–4BC30**		
II II	2000 ... 2500 3200	**3WT98 83–6BC10** **3WT98 83–7BC10**			**3WT98 83–6BC30** **3WT98 83–7BC30**		

For fixed-mounted and withdrawable circuit-breakers

Current transformers for neutral conductor overload protection and ground-fault protection
Only one of the two measuring methods is permissible in conjunction with the electronic trip unit. The overload protection for the neutral conductor takes effect when the current transformer is fitted in the neutral conductor. The ground-fault current is calculated by means of summation current formation of the phases and the neutral conductor.

Type of detection (see page 2/8) Designation	Electronic trip unit version	Primary rated current of the transformer A	Required order quantity per circuit-breaker	For 1 set or 1 unit Order No.	Price	Weight approx. kg
Vectorial summation with current transformer in the neutral conductor						
Current transformers for 3-pole circuit-breakers	ETU8WT, ETU5WT					
Direct detection of ground-fault current by means of a current transformer in the grounded neutral point of the transformer.						
Current transformers for 3- and 4-pole circuit-breakers	ETU8WT					
		630	1 unit	**3WT98 43–1CD00**		on req.
		800		**3WT98 43–1CE00**		on req.
		1000		**3WT98 43–1CF00**		on req.
		1250		**3WT98 43–1CG00**		on req.
		1600		**3WT98 43–1CH00**		on req.
		2000	1 unit	**3WT98 43–1FJ00**		on req.
		2500		**3WT98 43–1FK00**		on req.
		3200		**3WT98 43–1FM00**		on req.
Designation	Rated control supply voltage/ rated operational voltage		Order quantity	For 1 set or 1 unit		
	AC 50/60 Hz					
Function tester for electronic trip unit for versions ETU2WT, ETU5WT, ETU8WT	110–127/220–240 V		1 unit	**3WT98 47–5JA01**		1.300
ATSE controller for automatic switchover between two fixed-mounted or withdrawable circuit-breakers				on request		
Door sealing frame IP40			1 unit	**3WT98 86–0JA00**		1.000

Accessories/spare parts

When retrofitting, the circuit-breaker Order No. must be added to the name plate on the operator panel and to the side wall of the circuit-breaker in accordance with the installation instructions.

Designation			Required order quantity per circuit-breaker	For 1 set or 1 unit Order No.	Price	Weight approx. kg
For fixed-mounted and withdrawable circuit-breakers						
00035 **5-digit operating cycles counter**			1 unit	**3WT98 64–0CA00**		on req.
Auxiliary release	Rated control supply voltage AC 50/60 Hz V	 DC V				
Shunt release "f" for 1st and 2nd auxiliary release (F1 and F2) and closing solenoid (Y1)	– 110–127 220–240	24 110–125 220–250	1 unit	**3WT98 51–1JB00** **3WT98 51–1JH00** **3WT98 51–1JK00**		0.800 0.800 0.800
Undervoltage release "r" (F3) instantaneous 0 ms, short-delay 200 ms	– 220–240 380–415	24 220–250 –	1 unit	**3WT98 53–1JB00** **3WT98 53–1JK00** **3WT98 53–1JM00**		0.800 0.800 0.800
Undervoltage release "rc" (F8) can be delayed 0.2 ... 3.2 s	220–240 380–415	– –	1 unit	**3WT98 54–1JK00** **3WT98 54–1JM00**		0.850 0.850
Auxiliary switches 2 CO			1 unit	**3WT98 16–1CE00**		0.070
Motorized operating mechanism and electrical closing (possible if 9th position of Order No. for circuit-breaker is "A")	consisting of motor and closing solenoid (Y1) Rated control supply voltage Motor AC 50/60 Hz V	 DC V				
	110–127 220–240	110–125 220–250	1 set	**3WT98 31–1JH00** **3WT98 31–1JK00**		2.400 2.400
Motorized operating mechanism	consisting of motor and wiring; rated control supply voltage of motor AC 50/60 Hz V	 DC V				
	–	24	1 set	**3WT98 32–1JB00**		1.600
	110–127	110–125	1 set	**3WT98 32–1JH00**		1.600
	220–240	220–250	1 set	**3WT98 32–1JK00**		1.600
Electrical closing (possible if 9th position of Order No. for circuit-breaker is "A"	consisting of closing solenoid (Y1), electrical ON button and wiring; rated control supply voltage of closing solenoid (Y1) AC 50/60 Hz V	 DC V				
	–	24	1 set	**3WT98 33–1JB00**		0.800
	110–127 220–240	110–125 220–250	1 set	**3WT98 33–1JH00** **3WT98 33–1JK00**		0.800 0.800
Mutual mechanical interlock for 3WT circuit-breaker	An interlock module with a Bowden wire (2 m) for one fixed-mounted circuit-breaker for one withdrawable circuit-breaker		1 unit 1 unit	**3WT98 66–3JA00** **3WT98 66–4JA00**		3.000 1.000
	Interlocking of three circuit-breakers additional Bowden wire required for each circuit-breaker Bowden wire (2 m)		1 unit	**3WT98 66–8JA00**		0.200
	Bowden wire (3 m) Bowden wire (4.5 m)		1 unit	**3WT98 66–8JA01** **3WT98 66–8JA02**		0.500 on req.
Locking device consisting of safety locks or padlocks to prevent unauthorized closing of the circuit-breaker	Safety lock (3SB1) instead of the OFF button	Made by CES Normal lock no. SSG 10	1 unit	**3WT98 63–1JA00**		0.120
	Mounting set [1]) for CASTELL or FORTRESS lock [2]) Interlock to be obtained from the lock manufacturer CASTELL lock (FS 2) or FORTRESS lock (H31LH/65°/standard)		1 set	**3WT98 63–6JE00**		0.100

1) The 3WT98 63–6JE locking system meets the isolation conditions to IEC 60947-1 and IEC 60947-1/A1.

2) Locks are available at the manufacturer of the locks.

When retrofitting, the circuit-breaker Order No. must be added to the name plate on the operator panel and to the side wall of the circuit-breaker in accordance with the installation instructions.

Designation/ for circuit-breaker Type	Rated current I_n	Size	Number of poles	Required order quantity per circuit-breaker	For 1 set or 1 unit Order No.	Price	Weight approx. kg
For fixed-mounted and withdrawable circuit-breakers							
Crank handle For withdrawable circuit-breaker				1 set	**3WT98 84–0JA00**		on req.
For fixed-mounted circuit-breakers							
Connecting bars for vertical connection	up to 1250 A	I	3-pole and 4-pole	1 unit [3]	**3WT98 21–7AC00**		2.000
	1600 A	I	3-pole and 4-pole	1 unit [3]	**3WT98 21–7BC00**		4.100
	2000 A and 2500 A	II	3-pole	1 set [1]	**3WT98 21–7DA00**		5.500
			4-pole	1 set [2]	**3WT98 21–7DB00**		7.400
	3200 A	II	3-pole	1 set [1]	**3WT98 21–7FA00**		4.800
			4-pole	1 set [2]	**3WT98 21–7FB00**		6.500
Connecting bars for front-accessible connection Vertical double-hole bar (holes to DIN 43673)	up to 1250 A	I	3- and 4-pole	1 unit [3]	**3WT98 21–1AA01**		on req.
	1600 A	I	3- and 4-pole	1 unit [3]	**3WT98 21–1BA01**		on req.
	2000 A and 2500 A	II	3- and 4-pole	1 unit [3]	**3WT98 21–1DA01**		on req.
	3200 A	II	3- and 4-pole	1 unit [3]	**3WT98 21–1FA01**		on req.
Auxiliary supply connectors				1 unit	**3WT98 25–1JC00**		0.080
Blocking device	to prevent opening of the cabinet door with the fixed-mounted circuit-breaker closed			1 unit	**3WT98 67–2JA00**		0.700
Conversion set from fixed-mounted to withdrawable variant = single operating mechanism	up to 1600 A	I	3-pole	1 unit	**3WT98 88–0GA00**		on req.
	up to 1600 A	I	4-pole	1 unit	**3WT98 88–0HA00**		on req.
	up to 3200 A	II	3-pole	1 unit	**3WT98 88–0KA00**		on req.
	up to 3200 A	II	4-pole	1 unit	**3WT98 88–0LA00**		on req.
For guide frames							
Connecting bar for additional terminal accessible from the front Vertical double-hole bar (holes to DIN 43673)	up to 1250 A	I	3- and 4-pole	1 unit [3]	**3WT98 23–1AA01**		on req.
	1600 A	I	3- and 4-pole	1 unit [3]	**3WT98 23–1BA01**		on req.
	2000 A and 2500 A	II	3- and 4-pole	1 unit [3]	**3WT98 23–1DA01**		on req.
	3200 A	II	3- and 4-pole	1 unit [3]	**3WT98 23–1EA01**		on req.
Connecting bar for rear vertical connection	up to 1250 A	I	3- and 4-pole	1 unit [3]	**3WT98 23–3AA00**		on req.
	1600 A	I	3- and 4-pole	1 unit [3]	**3WT98 23–3BA00**		on req.
	2000 A and 2500 A	II	3-pole	1 set [1]	**3WT98 23–4AB00**		2.600
			4-pole	1 set [2]	**3WT98 23–4AC00**		3.500
	3200 A	II	3-pole	1 set [1]	**3WT98 23–4BB00**		5.400
			4-pole	1 set [2]	**3WT98 23–4BC00**		7.100
Position indicator switch (actuated by withdrawable circuit-breaker)	Connected position / Test position / Disconnected position		Precondition				
	3 NO + 3 NC / 2 NO + 2 NC / 1 NO + 1 NC		possible if no pos. switch mounted yet	1 set = 1 unit	**3WT98 84–1JC10**		on req.
Shutters	Protection against touching the main contacts For 3-pole guide frames		for rated current up to				
			size I, 1600 A	1 unit	**3WT98 84–3CA00**		0.500
			size II, 2000 A ... 3200 A	1 unit	**3WT98 84–3DA00**		on req.
	For 4-pole guide frames		for rated current up to				
			size I, 1600 A	1 unit	**3WT98 84–3CB00**		on req.
			size II, 2000 A ... 3200 A	1 unit	**3WT98 84–3DB00**		on req.
Auxiliary supply connectors	For guide frames – for spare parts and retrofitting			1 unit	**3WT98 27–1JA00**		0.160
For withdrawable circuit-breakers							
Blocking device	to prevent opening of the cabinet door, when circuit-breaker is in connected position			1 unit	**3WT98 67–1JC00**		on req.

1) 1 set = 3 units

2) 1 set = 4 units

3) Please order the number of connecting bars as required for the application.

Project planning aids

Characteristic curves

The characteristics show the behavior of the electronic trip unit when it is activated by a current that is already flowing before the tripping operation. If the overcurrent tripping occurs immediately after switch on and the electronic trip unit is therefore not yet enabled, the opening time is extended, depending on the level of the overcurrent by approximately 3 to 10 ms. In order to determine the total break-times of the circuit-breakers, approximately 15 ms must be added to the opening times shown for the arcing time.

Tolerances according to IEC 60947.

Tripping characteristics "L" and "S": "S" = definite-time delayed

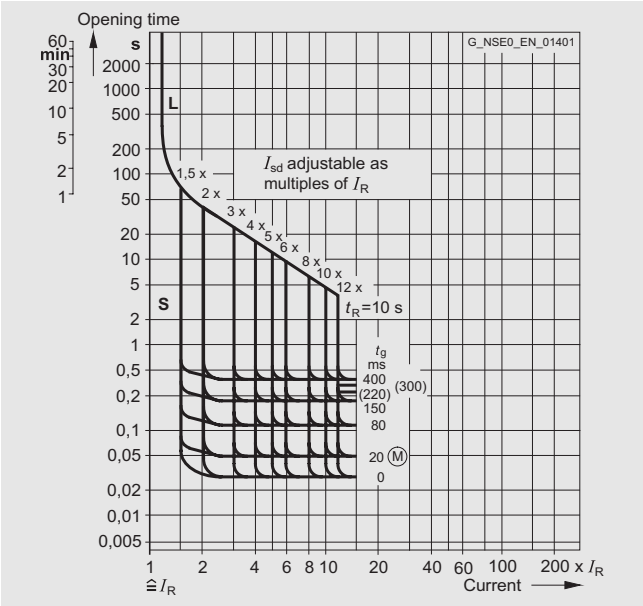

Tripping characteristics of electronic trip units – version ETU2WT

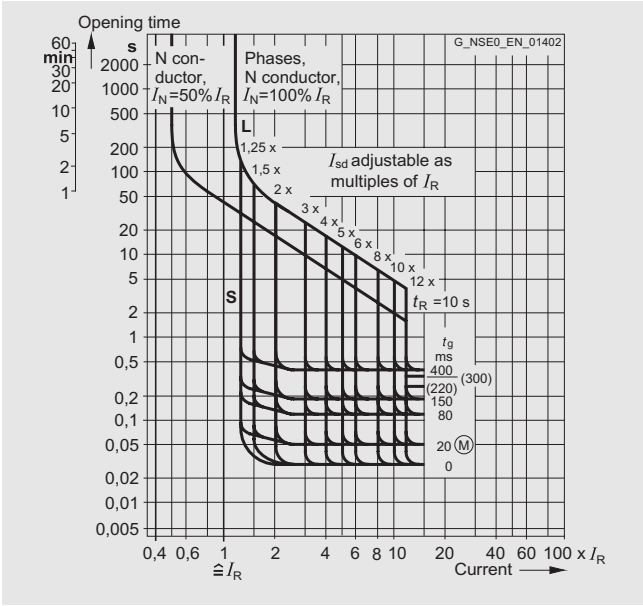

Tripping characteristics of electronic trip units – version ETU8WT

Key to illustrations above:

Inverse-time delayed electronic trip unit "L"
I_R Current setting (adjustable)
I_N Current setting (50 or 100 % I_R) for the N conductor
t_R Time-lag class (permanently set to 10 s)

Short-time delayed short-circuit release "S"
I_{sd} Operating current (adjustable)
t_{sd} Delay time (adjustable)

Tripping characteristic "I"

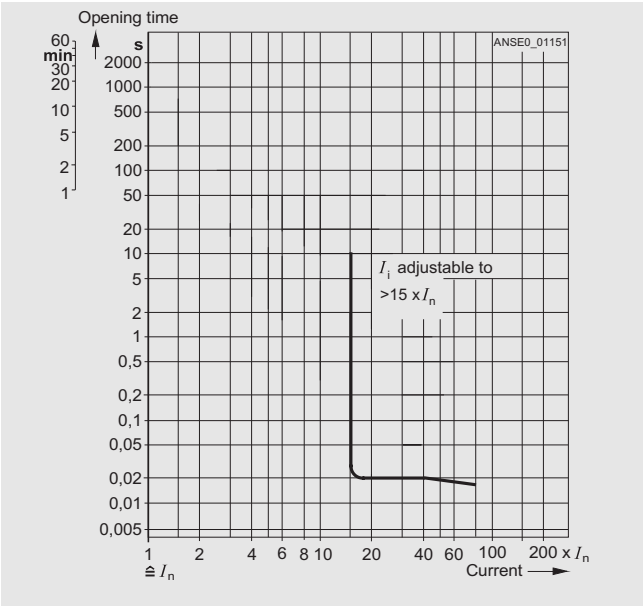

Tripping characteristics of electronic trip units – versions ETU2WT and ETU8WT

I_n Transformer primary rated current

Instantaneous short-circuit release "I"
I_i Operating current (permanently set)

Tripping characteristic "G": definite-time delayed

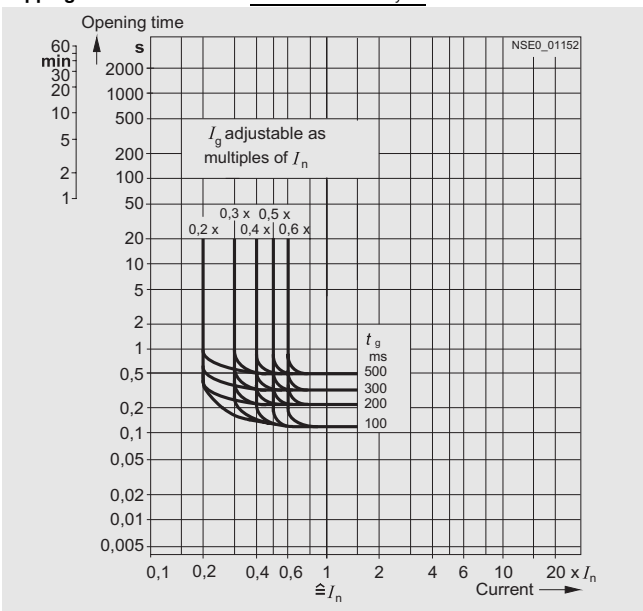

Tripping characteristics of electronic trip units – version ETU8WT

I_n Transformer primary rated current

Ground-fault release "G"
I_g Operating current (adjustable)
t_g Delay time (adjustable)

Dimensional drawings

3WT circuit-breakers, withdrawable version, 3-pole

Horizontal connection

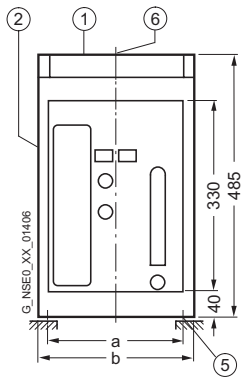

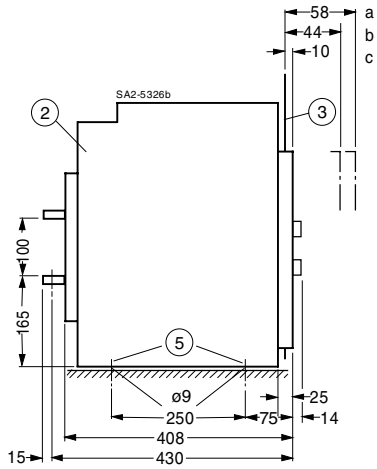

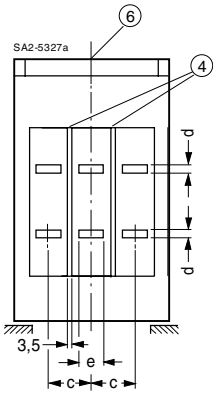

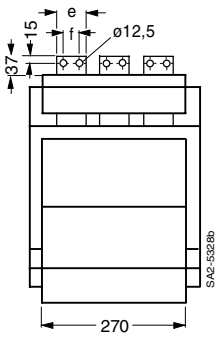

a Disconnected position

b Test position

c Connected position

① Auxiliary conductor plug-in system

② Guide frame

③ Switchboard door

④ Slots (6 mm deep) for line-side interphase barriers

⑤ Holes for attaching the guide frame

⑥ Center line of circuit-breaker

Safety clearances

No additional safety clearance is required to adjacent grounded parts above the circuit-breaker
(on fixed-mounted circuit-breakers identified with 3).

The clearance between the connection point and the support for the busbars must not exceed 250 mm.

Rated current A	a	b	c	d	e	f
630 up to 1250	280	320	90	8	60	30
1600	280	320	90	15	60	30
2000 up to 2500	380	420	120	15	80	40
3200	380	420	120	30	100	50

Main conductor connection

Terminal screws with strain washers (inside diameter = 12 mm to DIN 6769-Fst)		M12
Recommended tightening torque	Nm	70
Required strength of screws		8.8 to DIN 267

Up to a rated operating voltage of AC 440 V the busbars running vertically (such as in the case of front-accessible connection) do not have to be screened if the busbar system is not arranged above the circuit-breaker.
In contrast, live bare conductors and busbars at voltages above AC 440 V that are arranged above the circuit-breaker and when power is supplied from above must be insulated against flashover by interphase barriers or by a busbar cover or by an arc chute cover (use accessory for horizontal or vertical connection only).
Optional electrical equipment directly above (if no arc chute cover is used) or to the side of the circuit-breaker should be protected by a cover. Also after the attachment of additional barriers or covers it must be ensured that the dissipation of heat from the circuit-breaker is not impeded.

Project planning aids

3WT circuit-breakers, withdrawable version, 3-pole

Front connection

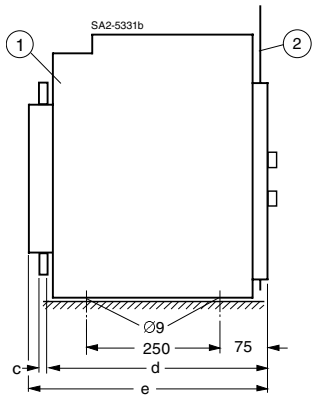

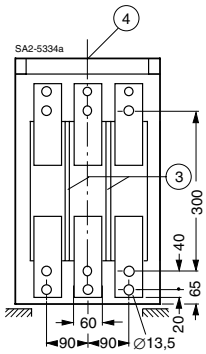

Double hole, 630 to 1600 A
Holes in bars to DIN 43673

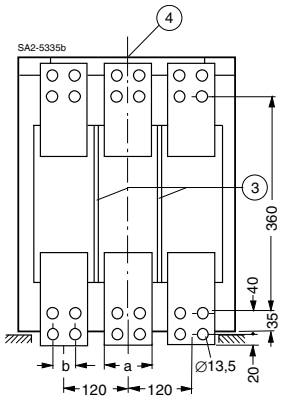

Double hole, 2000 to 3200 A
Holes in bars to DIN 43673

Rated current A	a	b	c	d	e
630 up to 1250	60	–	8	390	408
1600	60	–	15	390	408
2000 up to 2500	80	40	20	420	445
3200	100	50	20	420	445

① Guide frame
② Switchboard door
③ Slots (6 mm deep, 3.5 mm wide) for line-side phase barriers
④ Center line of circuit-breaker

For safety clearances see page 2/31.

3WT fixed-mounted circuit-breakers, 3-pole

Horizontal connection

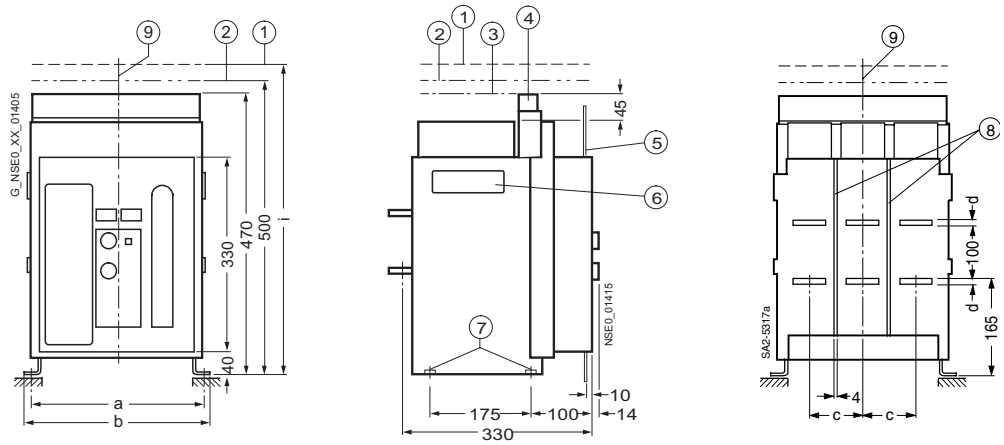

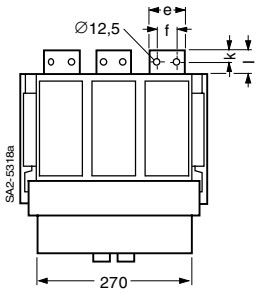

① Clearance for lifting out the arc chute
② Space for auxiliary supply connectors
③ Space above arc chute
④ Auxiliary supply connectors
⑤ Switchboard door
⑥ Recessed grip
⑦ M8 nut
⑧ Slots (4 mm deep) for line-side phase barriers
⑨ Center line of circuit-breaker

For safety clearances see page 2/31.

Front connection

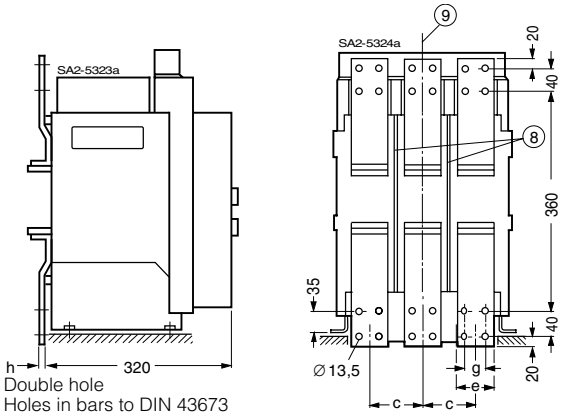

Rated current A	a	b	c	d	e	f	g	h	i	k	l
630 up to 1250	300	320	90	8	60	30	–	8	530	18	40
1600	300	320	90	15	60	30	–	20	530	18	40
2000 up to 2500	400	420	120	15	80	40	40	20	560	22	44
3200	400	420	120	30	80	40	40	20	560	22	44

Project planning aids

3WT circuit-breakers, withdrawable version, 4-pole

Horizontal connection

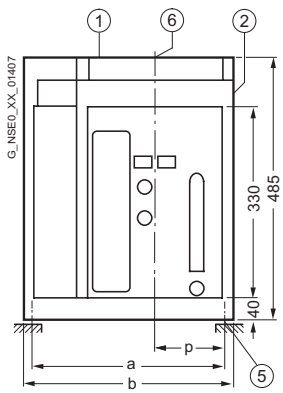

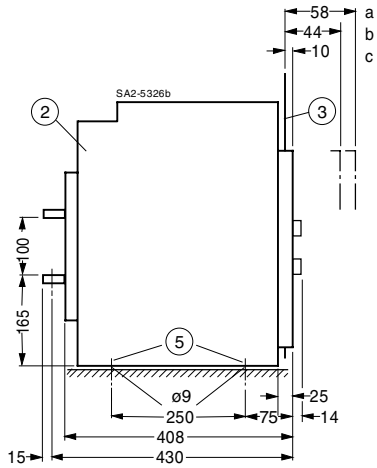

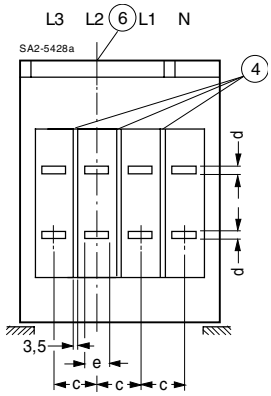

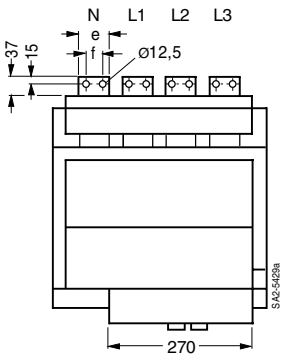

a Disconnected position
b Test position
c Connected position

① Auxiliary conductor plug-in system
② Guide frame
③ Switchboard door
④ Slots (6 mm deep) for line-side phase barriers
⑤ Holes for attaching the guide frame
⑥ Center line of operator panel

For safety clearances see page 2/31.

Rated current A	a	b	c	d	e	f	p
630 up to 1250	370	410	90	8	60	30	140
1600	370	410	90	15	60	30	140
2000 up to 2500	500	540	120	15	80	40	190
3200	500	540	120	30	100	50	190

3WT circuit-breakers, withdrawable version, 4-pole

Front connection

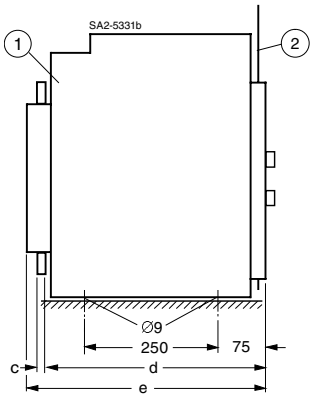

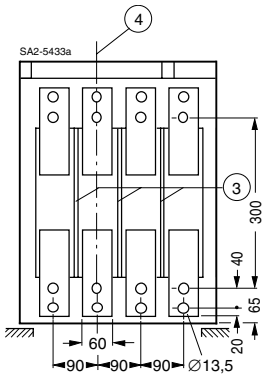

Double hole, 630 to 1600 A
Holes in bars to DIN 43673

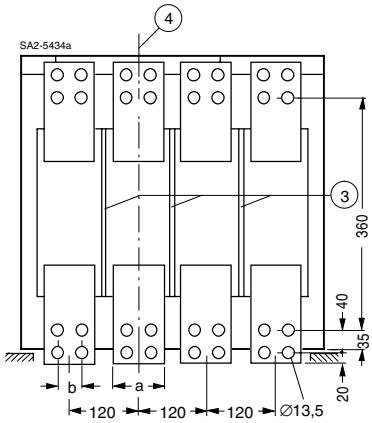

Double hole, 2000 to 3200 A
Holes in bars to DIN 43673

Rated current A	a	b	c	d	e
630 up to 1250	60	–	8	390	408
1600	60	–	15	390	408
2000 up to 2500	80	40	20	420	445
3200	100	50	20	420	445

① Guide frame
② Switchboard door
③ Slots (6 mm deep, 3.5 mm wide) for line-side phase barriers
④ Center line of operator panel

For safety clearances see page 2/31.

Project planning aids

3WT fixed-mounted circuit-breakers, 4-pole

Horizontal connection

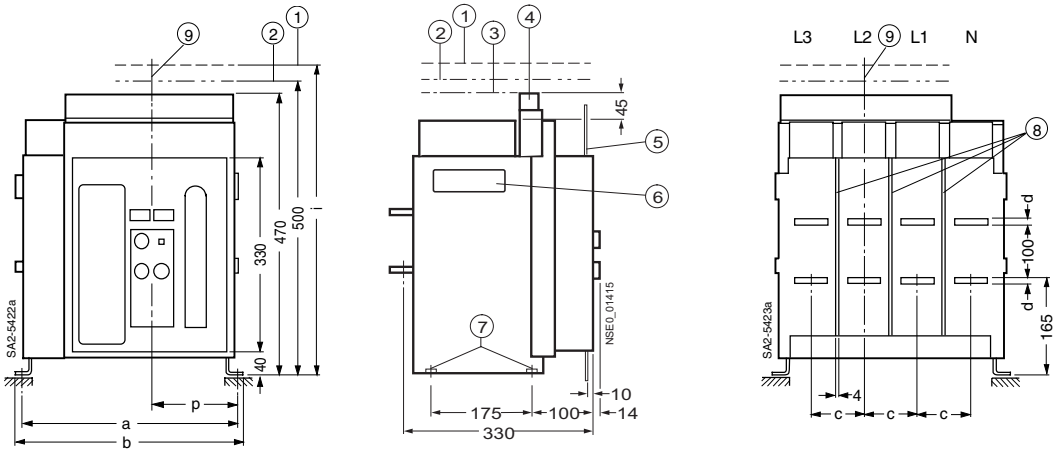

① Clearance for lifting out the arc chute
② Space for auxiliary supply connectors
③ Space above arc chute
④ Auxiliary supply connectors
⑤ Switchboard door
⑥ Recessed grip
⑦ Nut M 8
⑧ Slots (4 mm deep) for line-side phase barriers
⑨ Center line of operator panel

For safety clearances see page 2/31.

Front connection

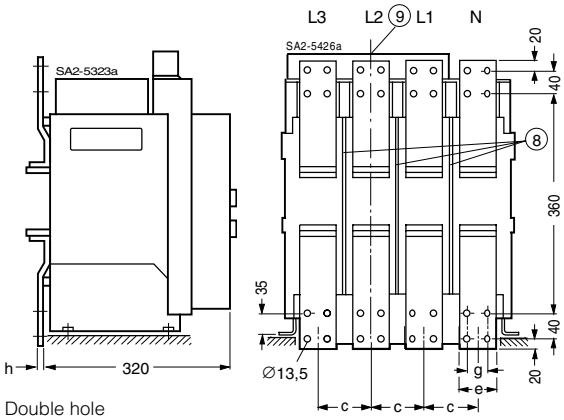

Double hole
Holes in bars to DIN 43673

Rated current A	a	b	c	d	e	f	g	h	i	k	l	p
630 up to 1250	390	410	90	8	60	30	–	8	530	18	40	150
1600	390	410	90	15	60	30	–	15	530	18	40	150
2000 up to 2500	520	540	120	15	80	40	40	20	560	22	44	200
3200	520	540	120	30	80	40	40	20	560	22	44	200

3WT circuit-breakers, 3- and 4-pole

Door cut-out for operator panel using the door sealing frame

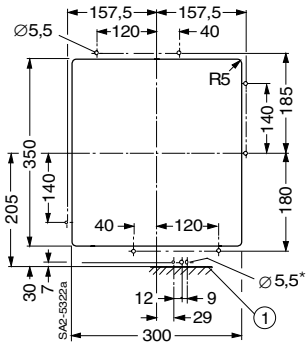

Door cut-out with edge protector
Cut-out after mounting the edge protector

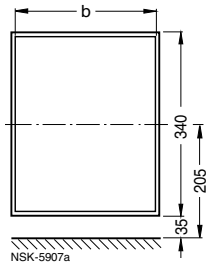

Cut-out when the circuit-breaker is installed in a switchgear cabinet and with the door arranged centrally.

Section width	Fixed-mounted b	Withdrawable b
400	275	292
500	275	290
600	275	288

① Mounting surface * 3 holes, dia. ∅ 5.5 mm; only drill when using door interlocking.

Accessories for 3WT circuit-breakers, 3- and 4-pole

Mutual mechanical interlocking (1)/locking device to prevent closing (2), consisting of lock in the control cabinet door and interlock module with Bowden wire

For fixed-mounted circuit-breakers

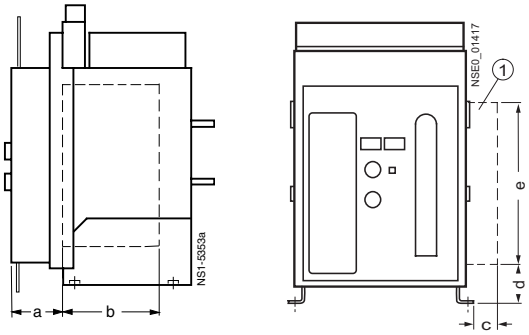

① Clearance for interlock module (without Bowden wire)

For withdrawable circuit-breakers

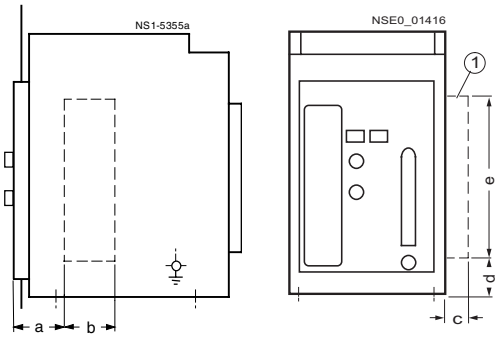

Clearance for	a	b	c	d	e
(1)	90	90	50	65	270
(2)	58	215	10	250	115

Current transformer for neutral conductor overload protection and ground-fault protection

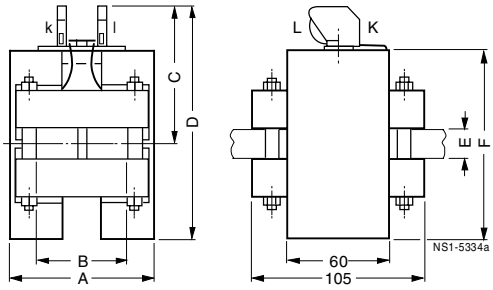

3WT98 43–1..00

Current transformer 3WT98 43–1. .00	Current transformer primary rated current I_n A	Size	A approx.	B	C	D	E	F
CD	630	I	92	60	86.5	140	5…15	107
CE	800							
CF	1000							
CG	1250							
CH	1600							
FJ	2000	II	128	80	99	167	5…35	136
FK	2500							
FM	3200							

Project planning aids

2

Schematics

Example of an overall circuit diagram

Motor/manual operating mechanism, with ready-to-close signaling switch, with electronic trip unit version ETU2WT "LSI", with overvoltage release "r" (F3) or shunt release "f" (F1), with shunt release "f" (F2), with "tripped" signaling switch, with auxiliary switch 2 NO + 2 NC + 2 CO, with motor switch

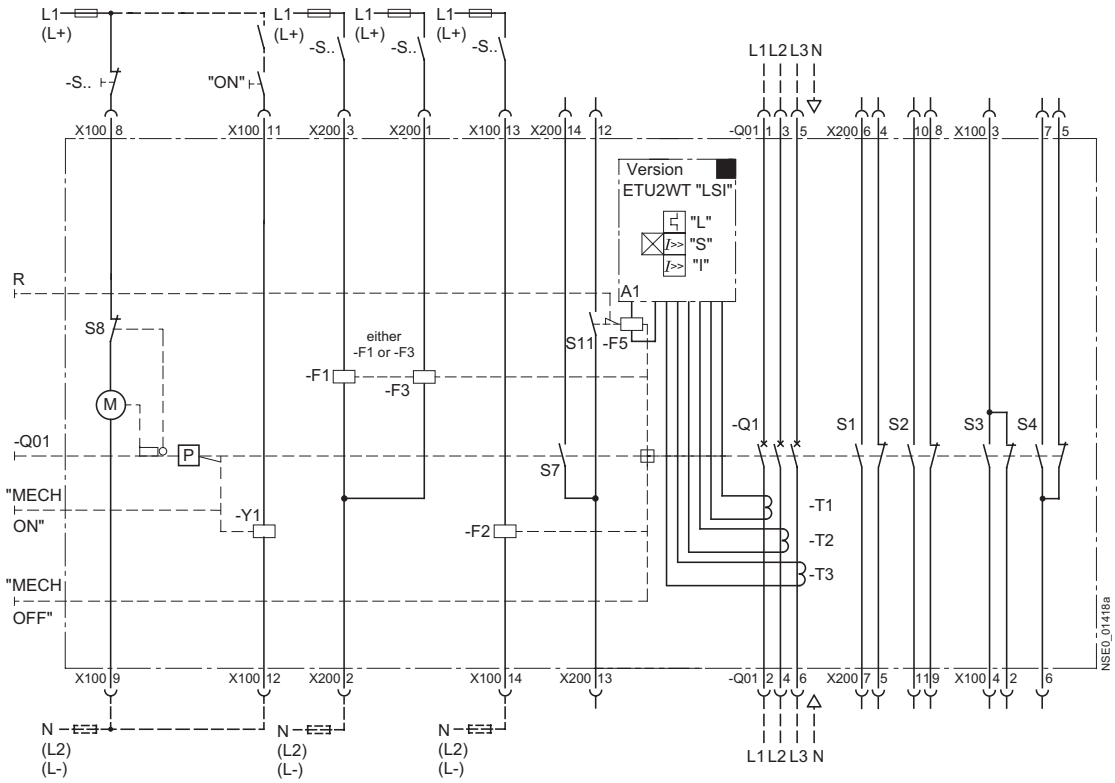

A1	Electronic trip unit
S1/S2	1st auxiliary switch block
S3/S4	2nd auxiliary switch block
S7	Ready-to-close signaling switch
S8	Storage spring contact
S11	"Tripped" switch
F1	1st shunt release "f"
F2	2nd shunt release "f"
F3	Undervoltage release "r"
F5	Trip solenoid
M1	Motor for "charging store"
P	Storage spring
Q01	Hand-operated lever for "charging store"
Q1	Main contacts
T1/T2/T3	Current transformer
X100/X200	Terminals
Y1	Closing solenoid
R	Indication and reset button for overcurrent tripping

Further information

For planning guides with further descriptions relating to design, operating principle, installation and retrofitting see manual "3WT circuit-breakers for low voltage"
Order No. on request.

3VT Molded-Case Circuit-Breakers up to 630 A

3

3/2	General data
3/14	3-pole
3/29	4-pole
3/39	Options
3/40	Accessories/spare parts
3/42	Project planning aids

General data

Overview

Type		VT63		VT100		VT160		VT250		VT400		VT630	
3VT molded-case circuit-breakers up to 630 A													
Rated current I_n at 40 °C ambient temperature	A	10 ... 63		32 ... 100		22.4 ... 160		112 ... 250		172 ... 400		400 ... 630	
Number of poles		3	4	3	4	3	4	3	4	3	4	3	4
Rated operating voltage U_e AC 50/60 Hz	V	415/440		415/440		415/440		415/440		415/440		415/440	
Overcurrent trip units													
Thermal-magnetic		✓	✓	✓	✓	✓	✓	✓	✓	✓	✓	✓	✓
Electronic ETU/LCD		–	–	–	–	–	–	✓	✓	✓	✓	✓	✓
Dimensions													
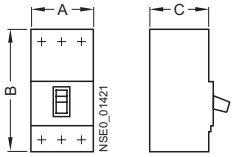	A mm	76.2	103	76.2	103	90	120	105	140	140	184	210	280
	B mm	120	120	120	120	120	120	170	170	254	254	268	268
	C mm	70	70/79	70/79	70/79	70/79	70/79	103.5	103.5	103.5	103.5	103.5	103.5
Switching capacity I_{cu}/I_{cs} r.m.s. value, to IEC 60947-2													
Standard switching capacity N up to AC 415/440 V	kA	25/12.5		25/12.5		35/26.25		35/35		35/35		35/35	
High switching capacity H up to AC 415/440 V	kA	50/37.5		50/37.5		50/37.5		50/37.5		50/37.5		50/37.5	
Very high switching capacity L up to AC 415/440 V	kA	–		–		–		–		–		65/48.75	

✓ available
– not available

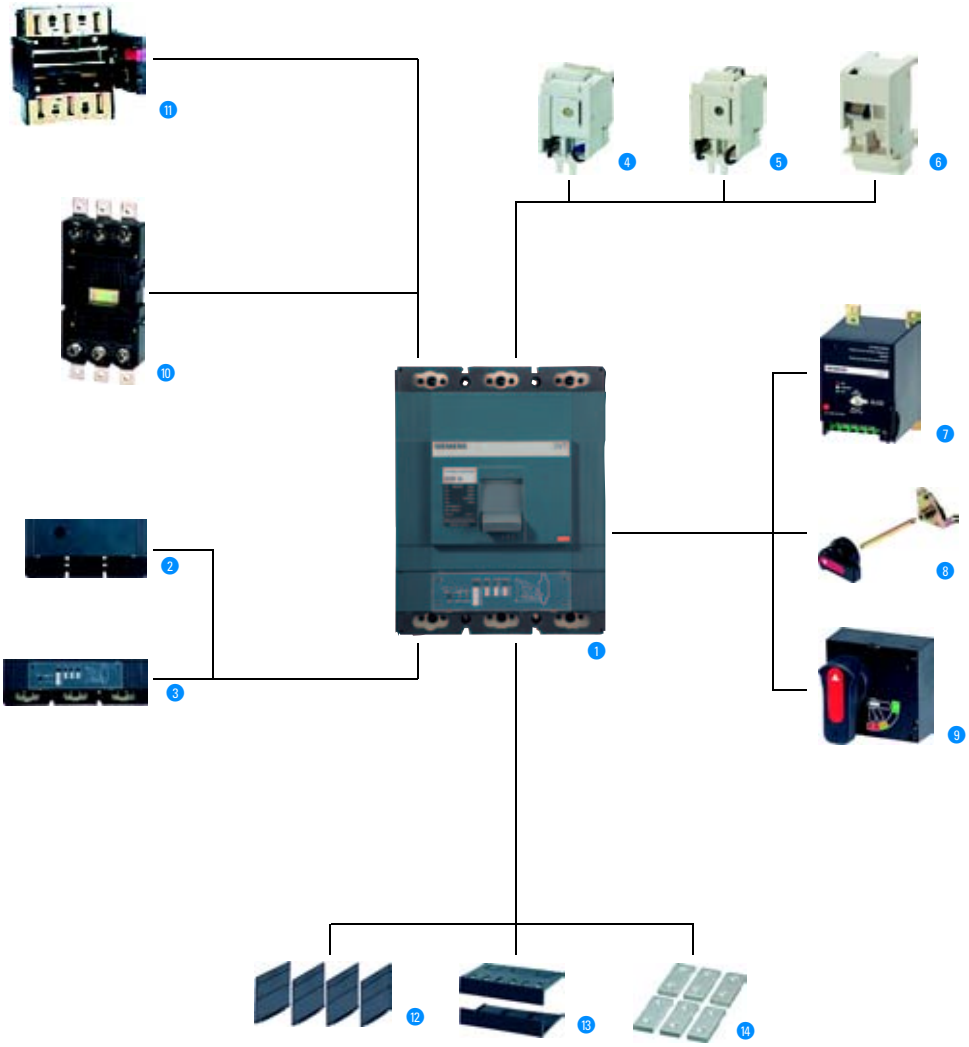

1 3VT Molded-case circuit-breaker
2 Thermal/magnetic overcurrent trip unit
3 Electronic overcurrent trip unit
4 Undervoltage release
5 Shunt release
6 Auxiliary/Alarm switches
7 Motorized operating mechanism
8 Rotary operating mechanism
9 Front-operated rotary operating mechanism
10 Plug-in base
11 Withdrawable version
12 Phase barriers
13 Terminal cover
14 Extended front busbar connecting bars

General data

Benefits

- The compact design of the 3VT circuit-breakers fulfills in an economic way the high demands of today's electrical distribution systems.
- These circuit-breakers offer a wide range of standard products, space savings and easy operation.
- They are available both in thermal/magnetic (10 A to 630 A) and in electronic versions (160 A to 630 A).

Application

The different versions of 3VT circuit-breakers are suitable for the following applications:

- Incoming and outgoing circuit-breakers in distribution systems
- Switching and protection devices for motors, transformers and capacitors
- Main control switches and EMERGENCY-STOP switches in conjunction with lockable rotary operating mechanism and terminal covers.

The 3VT circuit-breakers are available in the following versions:

1. For system protection (in 3 and 4-pole versions)
The overload and short-circuit releases are designed for the protection of cables, leads and non-motor loads.

2. For motor protection (in 3-pole versions)
The overload and short-circuit releases are designed for optimized protection and direct starting of three-phase squirrel-cage motors.

Standards and specifications

3VT circuit-breakers comply with:

IEC 60947-1
IEC 60947-2
IEC 60947-4.1
IEC 60947-5.1

Operating conditions

The 3VT circuit-breakers are climate-proof.
They are intended for use in enclosed areas where no severe operating conditions (e.g. dust, corrosive vapors, damaging gases) are present.

When installed in dusty and damp areas, suitable enclosures must be provided.

Utilization category

All 3VT circuit-breakers with thermal-magnetic trip unit satisfy utilization category A. The circuit-breakers equipped with an electronic trip unit satisfy the utilization category B.

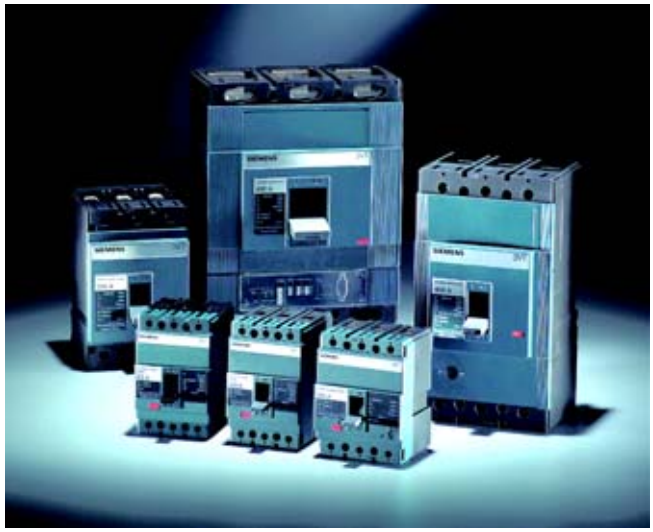

Degree of protection

Fixed-mounted circuit-breaker	IP20
Fixed-mounted circuit-breaker with screw rear terminals	IP40
Plug-in base/withdrawable version – Circuit-breaker	IP40
Plug-in base/withdrawable version – Fixed base	IP20

Design

- Rated current range from 10 A to 630 A
- No derating or loss of performance up to 40 °C
- Electronic overcurrent trip units from size 250 A (VT250)
- 3 families of internal accessories
- Full range of external accessories

All circuit-breakers are supplied with integrated overcurrent trip units. Auxiliary switches/alarm switches or auxiliary releases are available factory fitted.
The switching capacity is shown on the front of every circuit-breaker.

- Standard switching capacity:
  I_{cu} = 25 to 35 kA at AC 50/60 Hz 415/440 V
- High switching capacity:
  I_{cu} = 50 kA at AC 50/60 Hz 415/440 V
- Very high switching capacity:
  I_{cu} = 65 kA at AC 50/60 Hz 415/440 V

Connection

The 3VT circuit-breakers are equipped with incoming and outgoing front-accessible connecting bars which are suitable for fixed and flexible copper bars or cables. These are suitable for connection of standard busbars.

The incoming and outgoing connections for the circuit-breaker can be freely selected and can be used for front or rear connection. The electrical specifications remain the same.

Bare conductors at the top connections must be insulated in the arc quenching space that is necessary above the arcing chambers. Phase barriers or terminal covers can be used for this purpose.

For the 3VT circuit-breakers, the connections for the internal accessories (auxiliary releases, auxiliary switches and alarm switches) are supplied with terminal screws.

The auxiliary releases (shunt releases and undervoltage releases), auxiliary switches and alarm switches for all 3VT circuit-breakers can be connected easily and directly.

The motorized operating mechanisms are always equipped with terminals.

VT63 to VT100 circuit-breakers

VT100 circuit-breaker

The main components of the VT63 and VT100 circuit-breakers are the three conducting paths with the incoming and outgoing terminals. The fixed and moving contacts are designed in such a way that the contacts are magnetically repelled if there is a short-circuit. In this case and in conjunction with the arcing chambers, a dynamic impedance is created that causes current limiting. This effect brings a reduction in the damaging effects of I^2t and I_p energy that arises during short-circuits.

The trip unit is preassembled and equipped with fixed overload releases as well as with fixed short-circuit releases.

To the right and left of the operating mechanism are situated for the auxiliary releases.

VT160 circuit-breakers

VT160 circuit-breakers

The arrangement of the current path, main contact and switching mechanism as well as internal accessories corresponds to that of the VT63 to VT100 circuit-breakers.
The trip units for the VT160 have the following features:

- The thermal-magnetic overcurrent trip units are available with fixed or adjustable overload releases as well as fixed short-circuit releases.

VT250 to VT400 circuit-breakers

VT250 Circuit-breaker

The arrangement of the current path, main contact and switching mechanism as well as internal accessories corresponds to that of the VT63 to VT160 circuit-breakers.

The trip units for the VT250 to VT400 have the following features:

- The thermal-magnetic overcurrent trip units are also available with fixed or adjustable overload releases as well as fixed short-circuit releases.
- Electronic overcurrent trip unit available with adjustable overload and short-circuit releases.

VT630 circuit-breakers

VT630 circuit-breaker

The arrangement of the current paths and switching mechanism as well as internal accessories corresponds with those of the VT63 to VT400 circuit-breakers.

The VT630 circuit-breakers are available with electronic trip units as well as with thermal-magnetic trip units. The thermal-magnetic is equipped with fixed overload releases as well as with fixed short-circuit releases. The electronic overcurrent trip unit is available with adjustable overload and short-circuit releases.

General data

Overcurrent trip unit systems

1. Overcurrent trip unit system of the VT 63 to VT630 circuit-breakers – thermal-magnetic

The overcurrent and short-circuit releases function with bimetallic and magnetic trip units. They are available in fixed set or adjustable versions.

The four-pole circuit-breakers for system protection is equipped with overcurrent trip units for all four poles.

2. Overcurrent trip unit system for VT250 to VT630 circuit-breakers, electronic, ETU

The electronic overcurrent trip unit system consists of:

- Current transformers
- Evaluation electronics with microprocessor
- Tripping solenoid.

An auxiliary power supply is not necessary for the trip unit system.

As is the case for all versions of the 3VT circuit-breakers with electronic trip units, the current transformers are in the same enclosure as the trip units. They send a signal which is proportional to the load current to the electronic overcurrent tripping unit.

All 3VT circuit-breakers with electronic trip units measure the actual r.m.s. current. This type of measurement is the most accurate method. Currents in today's electrical distribution systems with many harmonics are evaluated reliably.

A minimum load current of approx. 20 % of the corresponding rated current I_n of the circuit-breaker is required to activate the microprocessor trip units.

At the output of the electronic overcurrent trip unit module there is a tripping solenoid which trips in the case of overload or short-circuit.

Abbreviations (functions)

L	= Long Time Delay	= Overload protection
S	= Short Time Delay	= Short-circuit protection (short-time delayed)
I	= Instantaneous	= Short-circuit protection (instantaneous)
G	= Ground Fault	= Ground-fault protection

L, S, I, G designations in accordance with IEC 60947

Internal accessories (auxiliary switches, undervoltage releases, shunt releases)

The 3VT circuit-breakers can be supplied with all the internal accessories (e.g. auxiliary switches, undervoltage releases or shunt releases).

Fixed-mounted, plug-in or withdrawable version

The 3VT circuit-breakers are available as fixed-mounted circuit-breaker as well as plug-in or withdrawable versions.

Operating mechanisms

The basic versions of the 3VT circuit-breakers are equipped with a toggle lever as an operating mechanism which is also used as a position indicator. In addition to "ON" and "OFF", "Tripped" is also indicated.

The toggle lever assumes the "tripped" position when the internal tripping mechanism is activated by an overcurrent trip operation, e.g. an overload or short-circuit. The activation of an undervoltage release or shunt release also causes the toggle lever to assume the "tripped" position. The toggle lever must be put into the "OFF/RESET" position before the circuit-breakers can be reclosed. It will then be possible to reset the internal release mechanism and reclose the main contacts on the circuit-breaker.

Front-operated rotary operating mechanisms

These operating mechanisms have been designed for direct mounting to the circuit-breaker and change the toggle lever movement from a linear to a rotary motion.

Door-coupling rotary operating mechanisms

Door-coupling rotary operating mechanisms and removable covers are available for circuit-breakers which are installed into control cabinets and distribution boards. These are supplied as complete sets, including an articulated-shaft mechanism.

With regard to the switching status indication and the "RESET" position, the same applies to the rotary operating mechanisms as to the toggle lever. The position of the operator lever (toggle) indicates the status.

All rotary operating mechanisms can be locked in the OFF position with the help of suitable padlocks. This means that all 3VT circuit-breakers which have these operating mechanisms as well as the corresponding terminal covers can be used as main switches.

Front-operated rotary operating mechanism

Door-coupling rotary operating mechanism

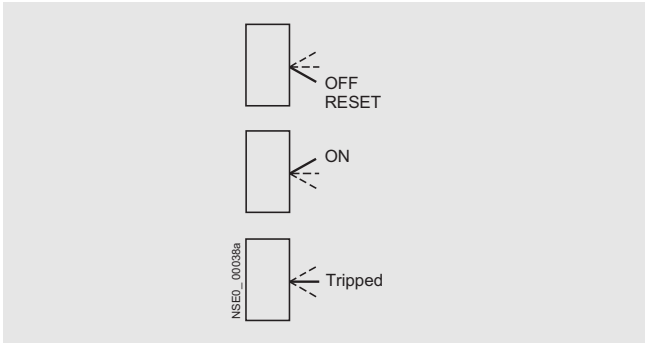

Toggle lever operating mechanism positions

Motorized operating mechanism

The VT160 to VT630 circuit-breakers can be equipped with motorized operating mechanisms for remote opening and closing during operation.

These devices can be used to block the operating mechanism electrically and mechanically. All remote-controlled mechanisms are equipped with a manual operation option for maintenance purposes.

Motorized operating mechanism

Auxiliary releases and auxiliary switches

Undervoltage releases

Undervoltage releases

If there is no voltage present, closing of the breaker is not possible. If voltage is not applied to the trip unit, operation of the circuit-breaker will result in no-load switching.

Frequent re-tripping should be avoided because of its adverse effect on the service life of the circuit-breaker.

All undervoltage releases have been designed and tested to fulfill all applicable requirements in accordance with IEC 60947 (release voltage 0.70 to 0.35 U_e, response voltage 0.85 to 1.10 U_e).

An attached version is available for the frame sizes VT63, VT100 and VT160.

For the frame sizes VT250, VT400 and VT630 an embedded version is available.

Shunt release

Shunt releases

The shunt release is used for remote tripping of the circuit-breaker.

The coil of the shunt release is designed for short-time operation only. A coil trip is implemented internally.

These devices operate in compliance with IEC 60947 (tripping voltage 0.70 to 1.10 U_e).

Auxiliary switches and alarm switches

Auxiliary and alarm switches

Auxiliary switches (HS) are used for indication and control. The different combination options for the auxiliary switches are shown in the following table.

The alarm switches (AS) are active when the circuit-breaker has been tripped due to an overcurrent e.g. overload or short-circuit. However, they are also activated if the circuit-breaker has been tripped by a shunt release or undervoltage release.

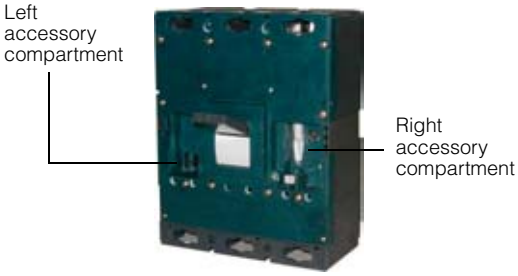

Installation Position of Accessories Left side	Right side
–	Alarm switch
–	Auxiliary switch
–	Auxiliary + Alarm switch
–	Two sets of auxiliary switches
Shunt trip	–
Shunt trip	Alarm switch
Shunt trip	Auxiliary switch
Shunt trip	Auxiliary + Alarm switch
Under voltage release	–
Under voltage release	Alarm switch
Under voltage release	Auxiliary switch
Under voltage release	Auxiliary + Alarm switch

Possible complements for the insulated accessory subsections in the 3VT circuit-breakers

General data

Main connections, basic equipment and options

Fixed-mounted version

Plug-in version

Withdrawable version

Main connections

Type	Fixed-mounted version			Plug-in version		Withdrawable version			
	Front terminal	Rear terminals	Extended front terminals	Front terminals	Rear terminals	Front	Rear terminals		
		Screw			Screw		Screw	Horizontal	Vertical
VT63	x	x	x	–	–	–	–	–	–
VT100	x	x	x	–	–	–	–	–	–
VT160	x	x	x	x	x	–	–	–	–
VT250	x	x	x	x	x	–	–	–	–
VT400	x	x	x	x	x	x	x	–	–
VT630	x	x	x	–	–	x	–	x	x

x = available

– = not available

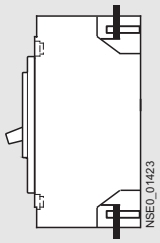

Front terminals

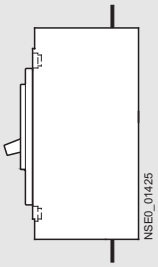

Extended front terminals

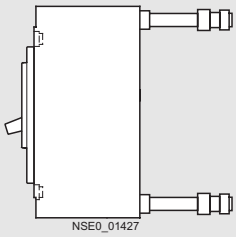

Rear terminals
for screw connection

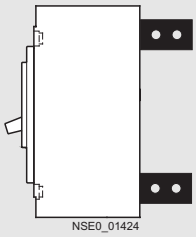

Rear terminals
for vertical connection

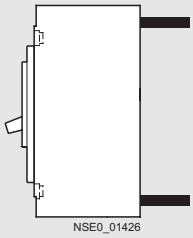

Rear terminals
for horizontal connection

Function

Current limitation

The 3VT circuit-breakers utilize the design principle of magnetic repulsion of the contacts. The contacts open before the anticipated peak value of the short-circuit current is achieved. The current-limiting effects of the 3VT circuit-breakers provide effective protection for system components against the thermal and dynamic effects of the short-circuit current in the event of an electrical fault.

Ground-fault protection

Ground-fault releases "g" sense fault currents that flow to ground and that can cause fire in the plant. Several circuit-breakers connected in series can provide graduated discrimination by means of the adjustable delay time.

Thermal-magnetic overcurrent trip unit

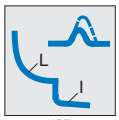

NSE0_00689

Application: system and motor protection – TM, LI/LIN function

Overload protection (fixed),
short-circuit protection (fixed)

NSE0_00690

Application: system and motor protection – TM, LI/LIN function

Overload protection
(adjustable I_R = 0.7 to 1 × I_n),
short-circuit protection (fixed)

Electronic overcurrent trip unit

NSE0_01422

Application: system and motor protection – ETU, LSI/LSIG [1]) function

L – Overload protection (adjustable):
I_r = 0.4 – 1.0 x I_n

S – Short time short-circuit protection (adjustable):
I_{sd} = 1.5; 5; 8 x I_r

I – Short-circuit protection (adjustable):
I_i = 2; 5; 10; 12 x I_n

G – Ground fault protection (adjustable) [1]):
I_g = 0.2; 0.4; 1.0 x I_n ; OFF

Pre-Alarm: I_{LC} = 0.7 - 1.0 x I_n

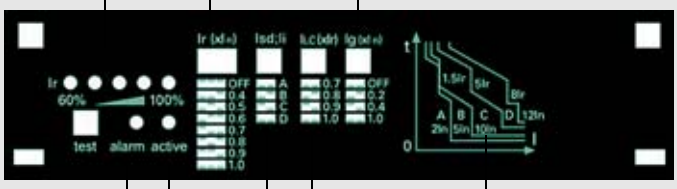

1) Only available for 4-pole circuit-breakers.

General data

Technical specifications

Type			VT63 N	VT63 H	VT100 N	VT100 H
Maximum rated current		A	63		100	
Rated current I_n		A	10, 16, 20, 25, 32, 40, 50, 63		32, 40, 50, 63, 80, 100	
Rated insulation voltage U_i	AC	V	500		500	
Rated operating voltage U_e, 50/60 Hz	AC	V	415/440		415/440	
Number of poles			3, 4		3, 4	
Rated current of the N pole			= I_n		= I_n	
Rated ultimate short-circuit breaking capacity I_{cu} at AC 50 Hz 415/440 V		kA	25	50	25	50
Rated service short-circuit breaking capacity I_{cs} at AC 50 Hz 415/440 V		kA	12.5	37.5	12.5	37.5
Rated short-time withstand current I_{cw} at AC 50 Hz 415/440 V 1s		kA	–		–	
Rated impulse withstand voltage U_{imp}		kV	6		6	
Endurance	Electrical	operating cycles	5000		5000	
	Mechanical	operating cycles	10000		10000	
Overcurrent trip unit	Thermal magnetic release		■		■	
	Electronic release		–		–	
Utilization category	Main circuit		A		A	
	Auxiliary circuit		AC-15		AC-15	
Dimensions	A	3-pole mm 4-pole mm	76.2 103	76.2 103	76.2 103	76.2 103
	B	3-pole mm 4-pole mm	120 120	120 120	120 120	120 120
	C	3-pole mm 4-pole mm	70 70	79 79	70 70	79 79
Weight	Fixed version 3-pole/4-pole	kg	0.92/1.3		0.92/1.3	
	Plug-in version 3-pole/4-pole	kg	–		–	
	Withdrawable version 3-pole/4-pole	kg	–		–	

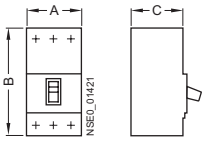

■ available

– not available

	VT160 N	VT160 H	VT250 N	VT250 H	VT400 N	VT400 H	VT630 N	VT630 H	VT630 L
	160		250		400		630		
	32, 40, 50, 63, 80, 100, 125, 160		160, 200, 250		250, 315, 400		400, 500, 630		
	690		690		690		690		
	415/440		415/440		415/440		415/440		
	3, 4		3, 4		3, 4		3, 4		
	= I_n		= I_n		= I_n		= I_n		
	35	50	35	50	35	50	35	50	65
	26.25	37.5	35	37.5	35	37.5	35	37.5	48.75
	–		–		5		10		
	8		8		8		8		
	5000		5000		4000		2500		
	10000		10000		8500		8500		
	■		■		■		■		
	■		■		■		–		
	A		A		A/B		A/B		
	AC-15		AC-15		AC-15		AC-15		
	90 120	90 120	140 184		140 184		210 280		
	120 120	120 120	170/254 [1] 170/254 [1]		254 254		268 268		
	70 70	79 79	103.5 103.5		103.5 103.5		103.5 103.5		
	1.2/1.6		2.7/3.5	4.1/5.5 [1]	5.1/7.1		9.6/12.2		
	1.4/1.8		3.2/4.2	4.6/6 [1]	6.2/8.5		–		
	–		–	–	6.5/8.7		12.2/15.3		

1) with ETU

General data

Type			VT63	VT100	VT160	VT250	VT400	VT630
Max. rated current I_n		A	63	100	160	250	400	630
Parameter of thermal overload protection current setting at various ambient temperatures								
at + 10 °C		x I_n	1.19	1.20	1.15	1.14	1.13	1.12
at + 20 °C		x I_n	1.13	1.14	1.10	1.10	1.11	1.10
at + 30 °C		x I_n	1.06	1.08	1.05	1.05	1.04	1.03
at + 40 °C		x I_n	1.00	1.00	1.00	1.00	1.00	1.00
at + 50 °C		x I_n	0.93	0.93	0.94	0.95	0.92	0.90
at + 55 °C		x I_n	0.90	0.89	0.91	0.91	0.88	0.85
at + 60 °C		x I_n	0.87	0.85	0.88	0.87	0.85	0.80
Power loss of the circuit-breaker								
Three-pole total power loss								
Fixed-mounted version	thermal-magnetic overcurrent trip unit	W	25	25	30	50	135	180
	electronic overcurrent trip unit ETU	W	–	–	–	40	60	90
Plug-in version	thermal-magnetic overcurrent trip unit	W	–	–	40	65	165	205
	electronic overcurrent trip unit ETU	W	–	–	–	55	90	115
Withdrawable version	thermal-magnetic overcurrent trip unit	W	–	–	–	–	165	205
	electronic overcurrent trip unit ETU	W	–	–	–	–	90	115
Shunt release								
Range of supply voltage			0.7-1.1 × U_s					
Power loss at rated control supply voltage U_s	AC 220 V 50 Hz	VA	150					
	AC 380 V 50 Hz	VA	150					
	DC 110 V	W	150					
	DC 220 V	W	150					
Undervoltage release								
Power loss at rated operating voltage U_e	AC 220 V 50 Hz	VA	10					
	AC 380 V 50 Hz	VA	10					
	DC 110 V	W	4					
	DC 220 V	W	4					
Operating voltage			0.35-0.7 × U_e					
Release (circuit-breaker is tripped)			0.35 × U_e					
Pick-up (circuit-breaker can be closed)			0.85-1.1 × U_e					
Auxiliary contacts								
Conventional thermal current I_{th}		A	4			6		
Rated insulation voltage U_i	AC 50 Hz	V	250			380		
Rated current at rated operating voltage U_e	AC 220 V 50 Hz	A	3			6		
	AC 380 V 50 Hz	A	–			3.5		
	DC 110 V	A	–			–		
	DC 220 V	A	0.14			0.2		
Motorized operating mechanism								
Range of supply voltage			0.85-1.1 × U_S					
Power loss at rated control supply voltage U_s: Inrush power consumption/ normal power	AC 220 V 50 Hz	VA	200/110					
	AC 380 V 50 Hz	VA	200/110					
	DC 110 V	W	200/110					
	DC 220 V	W	200/110					
Closing time		s	0.5					
Opening time		s	0.5					

3

Safety distance

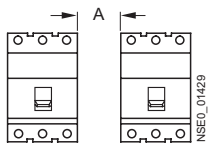

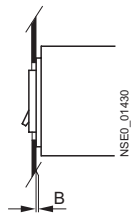

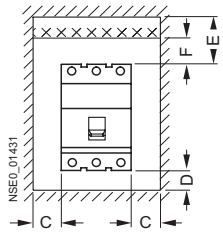

Max. rated current I_n A	A	B	C	D	E to metal body	F to insulator
63	0	0	20	20	50	25
100	0	0	20	20	50	25
160	0	0	20	20	50	30
250	0	0	25	20	100	40
400	0	0	25	20	100	40
630	0	0	25	20	100	40

Terminals for cable connection

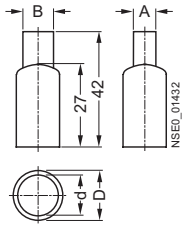

Rated current A	Cross section mm^2	A	B	d	D
10	1.5	3	10.5	5	8
16	2.5	3	10.5	5	8
20	2.5	3	10.5	5	8
25	4	3	10.5	5	8
32	6	3	10.5	5	8
40	10	4	10.5	8	12
50	10	4	10.5	8	12
63	16	4	10.5	8	12
80	25	6	10.5	11	15
100	35	6	10.5	11	15
125	50	8	10.5	13	17
160	70	8	10.5	13	17

Cross section of conductors for connecting with main circuit of circuit-breakers and cable size for terminal connection

Rated current	Cable size		Copper busbar size	
	Cross-section	Quantity	Quantity	Cross sectional area
A	mm^2			mm x mm
10	1.5	1	–	–
16	2.5	1	–	–
20	2.5	1	–	–
25	4	1	–	–
32	6	1	–	–
40	10	1	–	–
50	10	1	–	–
63	16	1	–	–
80	25	1	–	–
100	35	1	–	–
125	50	1	–	–
160	70	1	–	–
180	95	1	–	–
200	95	1	–	–
250	120	1	–	–
315	185	1	–	–
400	240	1	–	–
500	150	2	2	30 x 5
630	185	2	2	40 x 5

3-pole

Selection and ordering data

Fixed-mounted circuit-breakers for system and motor protection, thermal-magnetic overcurrent trip units

Type	Rated current I_n A	Setting current of inverse-time delayed overload release "L" I_R A	Setting current of instantaneous short-circuit release "I" I_i A	Standard switching capacity N I_{cu} at AC 415/440 V kA	Order No. / Order No. supplement required, see page 3/39	Basic Price	High switching capacity H I_{cu} at AC 415/440 V kA	Order No. / Order No. supplement required, see page 3/39	Basic Price	Very high switching capacity L I_{cu} at AC 415/440 V	Order No. / Order No. supplement required, see page 3/39	Basic Price
NSE0_00695	**Circuit-breakers for system protection, thermal-magnetic overcurrent trip unit, LI functions** with permanently set thermal overload releases, and permanently set short-circuit releases											
VT 63	10	10	500	25	**3VT80 10-1AA03-..A2**		50	**3VT80 10-2AA03-..A2**		–		
	16	16	500	25	**3VT80 16-1AA03-..A2**		50	**3VT80 16-2AA03-..A2**				
	20	20	500	25	**3VT80 20-1AA03-..A2**		50	**3VT80 20-2AA03-..A2**				
	25	25	500	25	**3VT80 25-1AA03-..A2**		50	**3VT80 25-2AA03-..A2**				
	32	32	500	25	**3VT80 32-1AA03-..A2**		50	**3VT80 32-2AA03-..A2**				
	40	40	500	25	**3VT80 40-1AA03-..A2**		50	**3VT80 40-2AA03-..A2**				
	50	50	500	25	**3VT80 50-1AA03-..A2**		50	**3VT80 50-2AA03-..A2**				
	63	63	630	25	**3VT80 63-1AA03-..A2**		50	**3VT80 63-2AA03-..A2**				
NSE0_00695	**Circuit-breakers for system protection, thermal-magnetic overcurrent trip unit, LI functions** with permanently set thermal overload releases, and permanently set short-circuit releases											
VT 100	32	32	500	25	**3VT81 03-1AA03-..A2**		50	**3VT81 03-2AA03-..A2**		–		
	40	40	500	25	**3VT81 04-1AA03-..A2**		50	**3VT81 04-2AA03-..A2**				
	50	50	500	25	**3VT81 05-1AA03-..A2**		50	**3VT81 05-2AA03-..A2**				
	63	63	630	25	**3VT81 06-1AA03-..A2**		50	**3VT81 06-2AA03-..A2**				
	80	80	800	25	**3VT81 08-1AA03-..A2**		50	**3VT81 08-2AA03-..A2**				
	100	100	1000	25	**3VT81 10-1AA03-..A2**		50	**3VT81 10-2AA03-..A2**				

Fixed-mounted circuit-breakers for system and motor protection, thermal-magnetic overcurrent trip units

Type	Rated current I_n A	Setting current of inverse-time delayed overload release "L" I_R A	Setting current of instantaneous short-circuit release "I" I_i A	Standard switching capacity N I_{cu} at AC 415/440 V kA	Order No. / Order No. supplement required, see page 3/39	Basic Price	High switching capacity H I_{cu} at AC 415/440 V kA	Order No. / Order No. supplement required, see page 3/39	Basic Price	Very high switching capacity L I_{cu} at AC 415/440 V kA	Order No. / Order No. supplement required, see page 3/39	Basic Price
NSE0_00695	**Circuit-breakers for system protection, thermal-magnetic overcurrent trip unit, LI functions** with permanently set thermal overload releases, and permanently set short-circuit releases											
VT 160	32	32	500	35	**3VT82 03-1AA03-..A2**		–			–		
	40	40	500	35	**3VT82 04-1AA03-..A2**							
	50	50	500	35	**3VT82 05-1AA03-..A2**							
	63	63	630	35	**3VT82 06-1AA03-..A2**							
	80	80	800	35	**3VT82 08-1AA03-..A2**							
	100	100	1000	35	**3VT82 10-1AA03-..A2**							
	125	125	1250	35	**3VT82 12-1AA03-..A2**							
	160	160	1600	35	**3VT82 16-1AA03-..A2**							
NSE0_00703	**Circuit-breakers for system protection, thermal-magnetic overcurrent trip unit, LI functions** with adjustable thermal overload releases, and permanently set short-circuit releases											
VT 160	32	22.4- 32	500	–			50	**3VT82 03-2BA03-..A2**		–		
	40	28 - 40	500				50	**3VT82 04-2BA03-..A2**				
	50	35 - 50	500				50	**3VT82 05-2BA03-..A2**				
	63	44.1- 63	630				50	**3VT82 06-2BA03-..A2**				
	80	56 - 80	800				50	**3VT82 08-2BA03-..A2**				
	100	70 -100	1000				50	**3VT82 10-2BA03-..A2**				
	125	87.5-125	1250				50	**3VT82 12-2BA03-..A2**				
	160	112 -160	1600				50	**3VT82 16-2BA03-..A2**				
NSE0_00695	**Circuit-breakers for motor protection, thermal-magnetic overcurrent trip unit, LI functions** with permanently set thermal overload releases, and permanently set short-circuit releases											
VT 160	50	50	600	35	**3VT82 05-1CA03-..A2**		–			–		
	63	63	756	35	**3VT82 06-1CA03-..A2**							
	80	80	960	35	**3VT82 08-1CA03-..A2**							
	100	100	1200	35	**3VT82 10-1CA03-..A2**							
	125	125	1500	35	**3VT82 12-1CA03-..A2**							
	160	160	1920	35	**3VT82 16-1CA03-..A2**							
NSE0_00703	**Circuit-breakers for motor protection, thermal-magnetic overcurrent trip unit, LI functions** with adjustable thermal overload releases, and permanently set short-circuit releases											
VT 160	50	35 - 50	600	–			50	**3VT82 05-2DA03-..A2**		–		
	63	44.1- 63	756				50	**3VT82 06-2DA03-..A2**				
	80	56 - 80	960				50	**3VT82 08-2DA03-..A2**				
	100	70 -100	1200				50	**3VT82 10-2DA03-..A2**				
	125	87.5-125	1500				50	**3VT82 12-2DA03-..A2**				
	160	112 -160	1920				50	**3VT82 16-2DA03-..A2**				

3-pole

Fixed-mounted circuit-breakers for system and motor protection, thermal-magnetic overcurrent trip units

Type	Rated current I_n A	Setting current of inverse-time delayed overload release "L" I_R A	Setting current of instantaneous short-circuit release "I" I_i A	Standard switching capacity N I_{cu} at AC 415/440 V kA	Order No. / Order No. supplement required, see page 3/39	Basic Price	High switching capacity H I_{cu} at AC 415/440 V kA	Order No. / Order No. supplement required, see page 3/39	Basic Price	Very high switching capacity L I_{cu} at AC 415/440 V kA	Order No. / Order No. supplement required, see page 3/39	Basic Price
NSE0_00695	**Circuit-breakers for system protection, thermal-magnetic overcurrent trip unit, LI functions** with permanently set thermal overload releases, and permanently set short-circuit releases											
VT 250	160	160	1600	35	**3VT83 16-1AA03-..A2**		–			–		
	200	200	2000	35	**3VT83 20-1AA03-..A2**							
	250	250	2500	35	**3VT83 25-1AA03-..A2**							
NSE0_00703	**Circuit-breakers for system protection, thermal-magnetic overcurrent trip unit, LI functions** with adjustable thermal overload releases, and permanently set short-circuit releases											
VT 250	160	112-160	1600	–			50	**3VT83 16-2BA03-..A2**		–		
	200	140-200	2000				50	**3VT83 20-2BA03-..A2**				
	250	175-250	2500				50	**3VT83 25-2BA03-..A2**				
NSE0_00695	**Circuit-breakers for motor protection, thermal-magnetic overcurrent trip unit, LI functions** with permanently set thermal overload releases, and permanently set short-circuit releases											
VT 250	160	160	1920	35	**3VT83 16-1CA03-..A2**		–			–		
	200	200	2400	35	**3VT83 20-1CA03-..A2**							
	250	250	3000	35	**3VT83 25-1CA03-..A2**							
NSE0_00703	**Circuit-breakers for motor protection, thermal-magnetic overcurrent trip unit, LI functions** with adjustable thermal overload releases, and permanently set short-circuit releases											
VT 250	160	112-160	1920	–			50	**3VT83 16-2DA03-..A2**		–		
	200	140-200	2400				50	**3VT83 20-2DA03-..A2**				
	250	175-250	3000				50	**3VT83 25-2DA03-..A2**				

Fixed-mounted circuit-breakers for system and motor protection, thermal-magnetic overcurrent trip units

Type	Rated current I_n A	Setting current of inverse-time delayed overload release "L" I_R A	Setting current of instantaneous short-circuit release "I" I_i A	Standard switching capacity N I_{cu} at AC 415/440 V kA	Order No. / Order No. supplement required, see page 3/39	Basic Price	High switching capacity H I_{cu} at AC 415/440 V kA	Order No. / Order No. supplement required, see page 3/39	Basic Price	Very high switching capacity L I_{cu} at AC 415/440 V kA	Order No. / Order No. supplement required, see page 3/39	Basic Price
NSE0_00695	**Circuit-breakers for system protection, thermal-magnetic overcurrent trip unit, LI functions** with permanently set thermal overload releases, and permanently set short-circuit releases											
VT 400	250	250	2500	35	**3VT84 25-1AA03-..A2**		–			–		
	315	315	3150	35	**3VT84 31-1AA03-..A2**							
	400	400	4000	35	**3VT84 40-1AA03-..A2**							
NSE0_00703	**Circuit-breakers for system protection, thermal-magnetic overcurrent trip unit, LI functions** with adjustable thermal overload releases, and permanently set short-circuit releases											
VT 400	250	175 -250	2500	–			50	**3VT84 25-2BA03-..A2**		–		
	315	220.5-315	3150				50	**3VT84 31-2BA03-..A2**				
	400	280 -400	4000				50	**3VT84 40-2BA03-..A2**				
NSE0_00695	**Circuit-breakers for motor protection, thermal-magnetic overcurrent trip unit, LI functions** with permanently set thermal overload releases, and permanently set short-circuit releases											
VT 400	250	250	3000	35	**3VT84 25-1CA03-..A2**		–			–		
	315	315	3780	35	**3VT84 31-1CA03-..A2**							
	400	400	4800	35	**3VT84 40-1CA03-..A2**							
NSE0_00703	**Circuit-breakers for motor protection, thermal-magnetic overcurrent trip unit, LI functions** with adjustable thermal overload releases, and permanently set short-circuit releases											
VT 400	250	175 -250	3000	–			50	**3VT84 25-2DA03-..A2**		–		
	315	220.5-315	3780				50	**3VT84 31-2DA03-..A2**				
	400	280 -400	4800				50	**3VT84 40-2DA03-..A2**				
NSE0_00695	**Circuit-breakers for system protection, thermal-magnetic overcurrent trip unit, LI functions** with permanently set thermal overload releases, and permanently set short-circuit releases											
VT 630	400	400	4000	35	**3VT85 40-1AA03-..A2**		50	**3VT85 40-2AA03-..A2**		65	**3VT85 40-3AA03-..A2**	
	500	500	5000	35	**3VT85 50-1AA03-..A2**		50	**3VT85 50-2AA03-..A2**		65	**3VT85 50-3AA03-..A2**	
	630	630	6300	35	**3VT85 63-1AA03-..A2**		50	**3VT85 63-2AA03-..A2**		65	**3VT85 63-3AA03-..A2**	

3-pole

Fixed-mounted circuit-breakers for system and motor protection, electronic overcurrent trip units

Type	Rated current I_n A	Setting current of inverse-time delayed overload release "L" I_R A	Setting current of instantaneous short-circuit release "I" I_i A	Standard switching capacity N I_{cu} at AC 415/440 V kA	Order No. / Order No. supplement required, see page 3/39	Basic Price	High switching capacity H I_{cu} at AC 415/440 V kA	Order No. / Order No. supplement required, see page 3/39	Basic Price	Very high switching capacity L I_{cu} at AC 415/440 V kA	Order No. / Order No. supplement required, see page 3/39	Basic Price
NSE0_01422	**Circuit-breakers for system and motor protection, electronic overcurrent trip unit, LSI functions** with adjustable thermal overload releases, and adjustable short-circuit releases											
VT 250	160	0.4-1.0 x I_n	2; 5; 10; 12 x I_n	35	**3VT83 16-1EA03-..A2**		50	**3VT83 16-2EA03-..A2**		–		
	200	0.4-1.0 x I_n	2; 5; 10; 12 x I_n	35	**3VT83 20-1EA03-..A2**		50	**3VT83 20-2EA03-..A2**				
	250	0.4-1.0 x I_n	2; 5; 10; 12 x I_n	35	**3VT83 25-1EA03-..A2**		50	**3VT83 25-2EA03-..A2**				
NSE0_01422	**Circuit-breakers for system and motor protection, electronic overcurrent trip unit, LSI functions** with adjustable thermal overload releases, and adjustable short-circuit releases											
VT 400	250	0.4-1.0 x I_n	2; 5; 10; 12 x I_n	35	**3VT84 25-1EA03-..A2**		50	**3VT84 25-2EA03-..A2**		–		
	315	0.4-1.0 x I_n	2; 5; 10; 12 x I_n	35	**3VT84 31-1EA03-..A2**		50	**3VT84 31-2EA03-..A2**				
	400	0.4-1.0 x I_n	2; 5; 10; 12 x I_n	35	**3VT84 40-1EA03-..A2**		50	**3VT84 40-2EA03-..A2**				
NSE0_01422	**Circuit-breakers for system protection, electronic overcurrent trip unit, LSI functions** with adjustable thermal overload releases, and adjustable short-circuit releases											
VT 630	400	0.4-1.0 x I_n	2; 5; 10; 12 x I_n	35	**3VT85 40-1EA03-..A2**		50	**3VT85 40-2EA03-..A2**		65	**3VT85 40-3EA03-..A2**	
	500	0.4-1.0 x I_n	2; 5; 10; 12 x I_n	35	**3VT85 50-1EA03-..A2**		50	**3VT85 50-2EA03-..A2**		65	**3VT85 50-3EA03-..A2**	
	630	0.4-1.0 x I_n	2; 5; 10; 12 x I_n	35	**3VT85 63-1EA03-..A2**		50	**3VT85 63-2EA03-..A2**		65	**3VT85 63-3EA03-..A2**	

Plug-in circuit-breakers with front terminals for system and motor protection, thermal-magnetic overcurrent trip units

Type	Rated current I_n A	Setting current of inverse-time delayed overload release "L" I_R A	Setting current of instantaneous short-circuit release "I" I_i A	Standard switching capacity N I_{cu} at AC 415/440 V kA	Order No. / Order No. supplement required, see page 3/39	Basic Price	High switching capacity H I_{cu} at AC 415/440 V kA	Order No. / Order No. supplement required, see page 3/39	Basic Price	Very high switching capacity L I_{cu} at AC 415/440 V kA	Order No. / Order No. supplement required, see page 3/39	Basic Price
NSE0_00695	**Circuit-breakers for system protection, thermal-magnetic overcurrent trip unit, LI functions** with permanently set thermal overload releases, and permanently set short-circuit releases											
VT 160	32	32	500	35	**3VT82 03-1AA03-..F2**		–			–		
	40	40	500	35	**3VT82 04-1AA03-..F2**							
	50	50	500	35	**3VT82 05-1AA03-..F2**							
	63	63	630	35	**3VT82 06-1AA03-..F2**							
	80	80	800	35	**3VT82 08-1AA03-..F2**							
	100	100	1000	35	**3VT82 10-1AA03-..F2**							
	125	125	1250	35	**3VT82 12-1AA03-..F2**							
	160	160	1600	35	**3VT82 16-1AA03-..F2**							
NSE0_00703	**Circuit-breakers for system protection, thermal-magnetic overcurrent trip unit, LI functions** with adjustable thermal overload releases, and permanently set short-circuit releases											
VT 160	32	22.4- 32	500	–			50	**3VT82 03-2BA03-..F2**		–		
	40	28 - 40	500				50	**3VT82 04-2BA03-..F2**				
	50	35 - 50	500				50	**3VT82 05-2BA03-..F2**				
	63	44.1- 63	630				50	**3VT82 06-2BA03-..F2**				
	80	56 - 80	800				50	**3VT82 08-2BA03-..F2**				
	100	70 -100	1000				50	**3VT82 10-2BA03-..F2**				
	125	87.5-125	1250				50	**3VT82 12-2BA03-..F2**				
	160	112 -160	1600				50	**3VT82 16-2BA03-..F2**				
NSE0_00695	**Circuit-breakers for motor protection, thermal-magnetic overcurrent trip unit, LI functions** with permanently set thermal overload releases, and permanently set short-circuit releases											
VT 160	50	50	600	35	**3VT82 05-1CA03-..F2**		–			–		
	63	63	756	35	**3VT82 06-1CA03-..F2**							
	80	80	960	35	**3VT82 08-1CA03-..F2**							
	100	100	1200	35	**3VT82 10-1CA03-..F2**							
	125	125	1500	35	**3VT82 12-1CA03-..F2**							
	160	160	1920	35	**3VT82 16-1CA03-..F2**							
NSE0_00703	**Circuit-breakers for motor protection, thermal-magnetic overcurrent trip unit, LI functions** with adjustable thermal overload releases, and permanently set short-circuit releases											
VT 160	50	35 - 50	600	–			50	**3VT82 05-2DA03-..F2**		–		
	63	44.1- 63	756				50	**3VT82 06-2DA03-..F2**				
	80	56 - 80	960				50	**3VT82 08-2DA03-..F2**				
	100	70 -100	1200				50	**3VT82 10-2DA03-..F2**				
	125	87.5-125	1500				50	**3VT82 12-2DA03-..F2**				
	160	112 -160	1920				50	**3VT82 16-2DA03-..F2**				

3-pole

Plug-in circuit-breakers with front terminals for system and motor protection, thermal-magnetic overcurrent trip units

Type	Rated current I_n A	Setting current of inverse-time delayed overload release "L" I_R A	Setting current of instantaneous short-circuit release "I" I_i A	Standard switching capacity N I_{cu} at AC 415/440 V kA	Order No. / Order No. supplement required, see page 3/39	Basic Price	High switching capacity H I_{cu} at AC 415/440 V kA	Order No. / Order No. supplement required, see page 3/39	Basic Price	Very high switching capacity L I_{cu} at AC 415/440 V kA	Order No. / Order No. supplement required, see page 3/39	Basic Price
NSE0_00695	**Circuit-breakers for system protection, thermal-magnetic overcurrent trip unit, LI functions** with permanently set thermal overload releases, and permanently set short-circuit releases											
VT 250	160	160	1600	35	**3VT83 16-1AA03-..F2**		–			–		
	200	200	2000	35	**3VT83 20-1AA03-..F2**							
	250	250	2500	35	**3VT83 25-1AA03-..F2**							
NSE0_00703	**Circuit-breakers for system protection, thermal-magnetic overcurrent trip unit, LI functions** with adjustable thermal overload releases, and permanently set short-circuit releases											
VT 250	160	112-160	1600	–			50	**3VT83 16-2BA03-..F2**		–		
	200	140-200	2000				50	**3VT83 20-2BA03-..F2**				
	250	175-250	2500				50	**3VT83 25-2BA03-..F2**				
NSE0_00695	**Circuit-breakers for motor protection, thermal-magnetic overcurrent trip unit, LI functions** with permanently set thermal overload releases, and permanently set short-circuit releases											
VT 250	160	160	1920	35	**3VT83 16-1CA03-..F2**		–			–		
	200	200	2400	35	**3VT83 20-1CA03-..F2**							
	250	250	3000	35	**3VT83 25-1CA03-..F2**							
NSE0_00703	**Circuit-breakers for motor protection, thermal-magnetic overcurrent trip unit, LI functions** with adjustable thermal overload releases, and permanently set short-circuit releases											
VT 250	160	112-160	1920	–			50	**3VT83 16-2DA03-..F2**		–		
	200	140-200	2400				50	**3VT83 20-2DA03-..F2**				
	250	175-250	3000				50	**3VT83 25-2DA03-..F2**				

3

Plug-in circuit-breakers with front terminals for system and motor protection, thermal-magnetic overcurrent trip units

Type	Rated current I_n A	Setting current of inverse-time delayed overload release "L" I_R A	Setting current of instantaneous short-circuit release "I" I_i A	Standard switching capacity N I_{cu} at AC 415/440 V kA	Order No. / Order No. supplement required, see page 3/39	Basic Price	High switching capacity H I_{cu} at AC 415/440 V kA	Order No. / Order No. supplement required, see page 3/39	Basic Price	Very high switching capacity L I_{cu} at AC 415/440 V kA	Order No. / Order No. supplement required, see page 3/39	Basic Price
NSE0_00695	**Circuit-breakers for system protection, thermal-magnetic overcurrent trip unit, LI functions** with permanently set thermal overload releases, and permanently set short-circuit releases											
VT 400	250	250	2500	35	**3VT84 25-1AA03-..F2**		–			–		
	315	315	3150	35	**3VT84 31-1AA03-..F2**							
	400	400	4000	35	**3VT84 40-1AA03-..F2**							
NSE0_00703	**Circuit-breakers for system protection, thermal-magnetic overcurrent trip unit, LI functions** with adjustable thermal overload releases, and permanently set short-circuit releases											
VT 400	250	175 -250	2500		–		50	**3VT84 25-2BA03-..F2**		–		
	315	220.5-315	3150				50	**3VT84 31-2BA03-..F2**				
	400	280 -400	4000				50	**3VT84 40-2BA03-..F2**				
NSE0_00695	**Circuit-breakers for motor protection, thermal-magnetic overcurrent trip unit, LI functions** with permanently set thermal overload releases, and permanently set short-circuit releases											
VT 400	250	250	3000	35	**3VT84 25-1CA03-..F2**		–			–		
	315	315	3780	35	**3VT84 31-1CA03-..F2**							
	400	400	4800	35	**3VT84 40-1CA03-..F2**							
NSE0_00703	**Circuit-breakers for motor protection, thermal-magnetic overcurrent trip unit, LI functions** with adjustable thermal overload releases, and permanently set short-circuit releases											
VT 400	250	175 -250	3000		–		50	**3VT84 25-2DA03-..F2**		–		
	315	220.5-315	3780				50	**3VT84 31-2DA03-..F2**				
	400	280 -400	4800				50	**3VT84 40-2DA03-..F2**				

Plug-in circuit-breakers with front terminals for system and motor protection, electronic overcurrent trip units

Type	Rated current I_n A	Setting current of inverse-time delayed overload release "L" I_R A	Setting current of instantaneous short-circuit release "I" I_i A	Standard switching capacity N I_{cu} at AC 415/440 V kA	Order No. / Order No. supplement required, see page 3/39	Basic Price	High switching capacity H I_{cu} at AC 415/440 V kA	Order No. / Order No. supplement required, see page 3/39	Basic Price	Very high switching capacity L I_{cu} at AC 415/440 V kA	Order No. / Order No. supplement required, see page 3/39	Basic Price
NSE0_01422	**Circuit-breakers for system and motor protection, electronic overcurrent trip unit, LSI functions** with adjustable thermal overload releases, and adjustable short-circuit releases											
VT 250	160	0.4-1.0 x I_n	2; 5; 10; 12 x I_n	35	**3VT83 16-1EA03-..F2**		50	**3VT83 16-2EA03-..F2**		–		
	200	0.4-1.0 x I_n	2; 5; 10; 12 x I_n	35	**3VT83 20-1EA03-..F2**		50	**3VT83 20-2EA03-..F2**				
	250	0.4-1.0 x I_n	2; 5; 10; 12 x I_n	35	**3VT83 25-1EA03-..F2**		50	**3VT83 25-2EA03-..F2**				
NSE0_01422	**Circuit-breakers for system and motor protection, electronic overcurrent trip unit, LSI functions** with adjustable thermal overload releases, and adjustable short-circuit releases											
VT 400	250	0.4-1.0 x I_n	2; 5; 10; 12 x I_n	35	**3VT84 25-1EA03-..F2**		50	**3VT84 25-2EA03-..F2**		–		
	315	0.4-1.0 x I_n	2; 5; 10; 12 x I_n	35	**3VT84 31-1EA03-..F2**		50	**3VT84 31-2EA03-..F2**				
	400	0.4-1.0 x I_n	2; 5; 10; 12 x I_n	35	**3VT84 40-1EA03-..F2**		50	**3VT84 40-2EA03-..F2**				

3-pole

Plug-in circuit-breakers with rear terminals for system and motor protection, thermal-magnetic overcurrent trip units

Type	Rated current I_n A	Setting current of inverse-time delayed overload release "L" I_R A	Setting current of instantaneous short-circuit release "I" I_i A	Standard switching capacity N I_{cu} at AC 415/440 V kA	Order No. / Order No. supplement required, see page 3/39	Basic Price	High switching capacity H I_{cu} at AC 415/440 V kA	Order No. / Order No. supplement required, see page 3/39	Basic Price	Very high switching capacity L I_{cu} at AC 415/440 V kA	Order No. / Order No. supplement required, see page 3/39	Basic Price
NSE0_00695	**Circuit-breakers for system protection, thermal-magnetic overcurrent trip unit, LI functions** with permanently set thermal overload releases, and permanently set short-circuit releases											
VT 160	32	32	500	35	**3VT82 03-1AA03-..G2**		–			–		
	40	40	500	35	**3VT82 04-1AA03-..G2**							
	50	50	500	35	**3VT82 05-1AA03-..G2**							
	63	63	630	35	**3VT82 06-1AA03-..G2**							
	80	80	800	35	**3VT82 08-1AA03-..G2**							
	100	100	1000	35	**3VT82 10-1AA03-..G2**							
	125	125	1250	35	**3VT82 12-1AA03-..G2**							
	160	160	1600	35	**3VT82 16-1AA03-..G2**							
NSE0_00703	**Circuit-breakers for system protection, thermal-magnetic overcurrent trip unit, LI functions** with adjustable thermal overload releases, and permanently set short-circuit releases											
VT 160	32	22.4- 32	500	–			50	**3VT82 03-2BA03-..G2**		–		
	40	28 - 40	500				50	**3VT82 04-2BA03-..G2**				
	50	35 - 50	500				50	**3VT82 05-2BA03-..G2**				
	63	44.1- 63	630				50	**3VT82 06-2BA03-..G2**				
	80	56 - 80	800				50	**3VT82 08-2BA03-..G2**				
	100	70 -100	1000				50	**3VT82 10-2BA03-..G2**				
	125	87.5-125	1250				50	**3VT82 12-2BA03-..G2**				
	160	112 -160	1600				50	**3VT82 16-2BA03-..G2**				
NSE0_00695	**Circuit-breakers for motor protection, thermal-magnetic overcurrent trip unit, LI functions** with permanently set thermal overload releases, and permanently set short-circuit releases											
VT 160	50	50	600	35	**3VT82 05-1CA03-..G2**		–			–		
	63	63	756	35	**3VT82 06-1CA03-..G2**							
	80	80	960	35	**3VT82 08-1CA03-..G2**							
	100	100	1200	35	**3VT82 10-1CA03-..G2**							
	125	125	1500	35	**3VT82 12-1CA03-..G2**							
	160	160	1920	35	**3VT82 16-1CA03-..G2**							
NSE0_00703	**Circuit-breakers for motor protection, thermal-magnetic overcurrent trip unit, LI functions** with adjustable thermal overload releases, and permanently set short-circuit releases											
VT 160	50	35 - 50	600	–			50	**3VT82 05-2DA03-..G2**		–		
	63	44.1- 63	756				50	**3VT82 06-2DA03-..G2**				
	80	56 - 80	960				50	**3VT82 08-2DA03-..G2**				
	100	70 -100	1200				50	**3VT82 10-2DA03-..G2**				
	125	87.5-125	1500				50	**3VT82 12-2DA03-..G2**				
	160	112 -160	1920				50	**3VT82 16-2DA03-..G2**				

Plug-in circuit-breakers with rear terminals for system and motor protection, thermal-magnetic overcurrent trip units

Type	Rated current I_n A	Setting current of inverse-time delayed overload release "L" I_R A	Setting current of instantaneous short-circuit release "I" I_i A	Standard switching capacity N I_{cu} at AC 415/440 V kA	Order No. / Order No. supplement required, see page 3/39	Basic Price	High switching capacity H I_{cu} at AC 415/440 V kA	Order No. / Order No. supplement required, see page 3/39	Basic Price	Very high switching capacity L I_{cu} at AC 415/440 V kA	Order No. / Order No. supplement required, see page 3/39	Basic Price
NSE0_00695	**Circuit-breakers for system protection, thermal-magnetic overcurrent trip unit, LI functions** with permanently set thermal overload releases, and permanently set short-circuit releases											
VT 250	160	160	1600	35	**3VT83 16-1AA03-..G2**		–			–		
	200	200	2000	35	**3VT83 20-1AA03-..G2**							
	250	250	2500	35	**3VT83 25-1AA03-..G2**							
NSE0_00703	**Circuit-breakers for system protection, thermal-magnetic overcurrent trip unit, LI functions** with adjustable thermal overload releases, and permanently set short-circuit releases											
VT 250	160	112-160	1600	–			50	**3VT83 16-2BA03-..G2**		–		
	200	140-200	2000				50	**3VT83 20-2BA03-..G2**				
	250	175-250	2500				50	**3VT83 25-2BA03-..G2**				
NSE0_00695	**Circuit-breakers for motor protection, thermal-magnetic overcurrent trip unit, LI functions** with permanently set thermal overload releases, and permanently set short-circuit releases											
VT 250	160	160	1920	35	**3VT83 16-1CA03-..G2**		–			–		
	200	200	2400	35	**3VT83 20-1CA03-..G2**							
	250	250	3000	35	**3VT83 25-1CA03-..G2**							
NSE0_00703	**Circuit-breakers for motor protection, thermal-magnetic overcurrent trip unit, LI functions** with adjustable thermal overload releases, and permanently set short-circuit releases											
VT 250	160	112-160	1920	–			50	**3VT83 16-2DA03-..G2**		–		
	200	140-200	2400				50	**3VT83 20-2DA03-..G2**				
	250	175-250	3000				50	**3VT83 25-2DA03-..G2**				

3-pole

Plug-in circuit-breakers with rear terminals for system and motor protection, thermal-magnetic overcurrent trip units

Type	Rated current I_n A	Setting current of inverse-time delayed overload release "L" I_R A	Setting current of instantaneous short-circuit release "I" I_i A	Standard switching capacity N I_{cu} at AC 415/440 V kA	Order No. / Order No. supplement required, see page 3/39	Basic Price	High switching capacity H I_{cu} at AC 415/440 V kA	Order No. / Order No. supplement required, see page 3/39	Basic Price	Very high switching capacity L I_{cu} at AC 415/440 V kA	Order No. / Order No. supplement required, see page 3/39	Basic Price
NSE0_00695	**Circuit-breakers for system protection, thermal-magnetic overcurrent trip unit, LI functions** with permanently set thermal overload releases, and permanently set short-circuit releases											
VT 400	250	250	2500	35	**3VT84 25-1AA03-..G2**		–			–		
	315	315	3150	35	**3VT84 31-1AA03-..G2**							
	400	400	4000	35	**3VT84 40-1AA03-..G2**							
NSE0_00703	**Circuit-breakers for system protection, thermal-magnetic overcurrent trip unit, LI functions** with adjustable thermal overload releases, and permanently set short-circuit releases											
VT 400	250	175 -250	2500		–		50	**3VT84 25-2BA03-..G2**		–		
	315	220.5-315	3150				50	**3VT84 31-2BA03-..G2**				
	400	280 -400	4000				50	**3VT84 40-2BA03-..G2**				
NSE0_00695	**Circuit-breakers for motor protection, thermal-magnetic overcurrent trip unit, LI functions** with permanently set thermal overload releases, and permanently set short-circuit releases											
VT 400	250	250	3000	35	**3VT84 25-1CA03-..G2**		–			–		
	315	315	3780	35	**3VT84 31-1CA03-..G2**							
	400	400	4800	35	**3VT84 40-1CA03-..G2**							
NSE0_00703	**Circuit-breakers for motor protection, thermal-magnetic overcurrent trip unit, LI functions** with adjustable thermal overload releases, and permanently set short-circuit releases											
VT 400	250	175 -250	3000		–		50	**3VT84 25-2DA03-..G2**		–		
	315	220.5-315	3780				50	**3VT84 31-2DA03-..G2**				
	400	280 -400	4800				50	**3VT84 40-2DA03-..G2**				

Plug-in circuit-breakers with rear terminals for system and motor protection, electronic overcurrent trip units

Type	Rated current I_n A	Setting current of inverse-time delayed overload release "L" I_R A	Setting current of instantaneous short-circuit release "I" I_i A	Standard switching capacity N I_{cu} at AC 415/440 V kA	Order No. / Order No. supplement required, see page 3/39	Basic Price	High switching capacity H I_{cu} at AC 415/440 V kA	Order No. / Order No. supplement required, see page 3/39	Basic Price	Very high switching capacity L I_{cu} at AC 415/440 V kA	Order No. / Order No. supplement required, see page 3/39	Basic Price
NSE0_01422	**Circuit-breakers for system and motor protection, electronic overcurrent trip unit, LSI functions** with adjustable thermal overload releases, and adjustable short-circuit releases											
VT 250	160	0.4-1.0 x I_n	2; 5; 10; 12 x I_n	35	**3VT83 16-1EA03-..G2**		50	**3VT83 16-2EA03-..G2**		–		
	200	0.4-1.0 x I_n	2; 5; 10; 12 x I_n	35	**3VT83 20-1EA03-..G2**		50	**3VT83 20-2EA03-..G2**				
	250	0.4-1.0 x I_n	2; 5; 10; 12 x I_n	35	**3VT83 25-1EA03-..G2**		50	**3VT83 25-2EA03-..G2**				
NSE0_01422	**Circuit-breakers for system and motor protection, electronic overcurrent trip unit, LSI functions** with adjustable thermal overload releases, and adjustable short-circuit releases											
VT 400	250	0.4-1.0 x I_n	2; 5; 10; 12 x I_n	35	**3VT84 25-1EA03-..G2**		50	**3VT84 25-2EA03-..G2**		–		
	315	0.4-1.0 x I_n	2; 5; 10; 12 x I_n	35	**3VT84 31-1EA03-..G2**		50	**3VT84 31-2EA03-..G2**				
	400	0.4-1.0 x I_n	2; 5; 10; 12 x I_n	35	**3VT84 40-1EA03-..G2**		50	**3VT84 40-2EA03-..G2**				

Withdrawable circuit-breakers with front terminals for system and motor protection, thermal-magnetic overcurrent trip units

Type	Rated current I_n A	Setting current of inverse-time delayed overload release "L" I_R A	Setting current of instantaneous short-circuit release "I" I_i A	Standard switching capacity N I_{cu} at AC 415/440 V kA	Order No. / Order No. supplement required, see page 3/39	Basic Price	High switching capacity H I_{cu} at AC 415/440 V kA	Order No. / Order No. supplement required, see page 3/39	Basic Price	Very high switching capacity L I_{cu} at AC 415/440 V kA	Order No. / Order No. supplement required, see page 3/39	Basic Price
NSE0_00695	**Circuit-breakers for system protection, thermal-magnetic overcurrent trip unit, LI functions** with permanently set thermal overload releases, and permanently set short-circuit releases											
VT 400	250	250	2500	35	**3VT84 25-1AA03-..H2**		–			–		
	315	315	3150	35	**3VT84 31-1AA03-..H2**							
	400	400	4000	35	**3VT84 40-1AA03-..H2**							
NSE0_00703	**Circuit-breakers for system protection, thermal-magnetic overcurrent trip unit, LI functions** with adjustable thermal overload releases, and permanently set short-circuit releases											
VT 400	250	175 -250	2500	–			50	**3VT84 25-2BA03-..H2**		–		
	315	220.5-315	3150				50	**3VT84 31-2BA03-..H2**				
	400	280 -400	4000				50	**3VT84 40-2BA03-..H2**				
NSE0_00695	**Circuit-breakers for motor protection, thermal-magnetic overcurrent trip unit, LI functions** with permanently set thermal overload releases, and permanently set short-circuit releases											
VT 400	250	250	3000	35	**3VT84 25-1CA03-..H2**		–			–		
	315	315	3780	35	**3VT84 31-1CA03-..H2**							
	400	400	4800	35	**3VT84 40-1CA03-..H2**							
NSE0_00703	**Circuit-breakers for motor protection, thermal-magnetic overcurrent trip unit, LI functions** with adjustable thermal overload releases, and permanently set short-circuit releases											
VT 400	250	175 -250	3000	–			50	**3VT84 25-2DA03-..H2**		–		
	315	220.5-315	3780				50	**3VT84 31-2DA03-..H2**				
	400	280 -400	4800				50	**3VT84 40-2DA03-..H2**				
NSE0_00695	**Circuit-breakers for system protection, thermal-magnetic overcurrent trip unit, LI functions** with permanently set thermal overload releases, and permanently set short-circuit releases											
VT 630	400	400	4000	35	**3VT85 40-1AA03-..H2**		50	**3VT85 40-2AA03-..H2**		65	**3VT85 40-3AA03-..H2**	
	500	500	5000	35	**3VT85 50-1AA03-..H2**		50	**3VT85 50-2AA03-..H2**		65	**3VT85 50-3AA03-..H2**	
	630	630	6300	35	**3VT85 63-1AA03-..H2**		50	**3VT85 63-2AA03-..H2**		65	**3VT85 63-3AA03-..H2**	

3-pole

Withdrawable circuit-breakers with front terminals for system and motor protection, electronic overcurrent trip units

Type	Rated current I_n A	Setting current of inverse-time delayed overload release "L" I_R A	Setting current of instantaneous short-circuit release "I" I_i A	Standard switching capacity N I_{cu} at AC 415/440 V kA	Order No. / Order No. supplement required, see page 3/39	Basic Price	High switching capacity H I_{cu} at AC 415/440 V kA	Order No. / Order No. supplement required, see page 3/39	Basic Price	Very high switching capacity L I_{cu} at AC 415/440 V kA	Order No. / Order No. supplement required, see page 3/39	Basic Price
NSE0_01422	**Circuit-breakers for system and motor protection, electronic overcurrent trip unit, LSI functions** with adjustable thermal overload releases, and adjustable short-circuit releases											
VT 400	250	0.4-1.0 x I_n	2; 5; 10; 12 x I_n	35	**3VT84 25-1EA03-..H2**		50	**3VT84 25-2EA03-..H2**			–	
	315	0.4-1.0 x I_n	2; 5; 10; 12 x I_n	35	**3VT84 31-1EA03-..H2**		50	**3VT84 31-2EA03-..H2**				
	400	0.4-1.0 x I_n	2; 5; 10; 12 x I_n	35	**3VT84 40-1EA03-..H2**		50	**3VT84 40-2EA03-..H2**				
NSE0_01422	**Circuit-breakers for system protection, electronic overcurrent trip unit, LSI functions** with adjustable thermal overload releases, and adjustable short-circuit releases											
VT 630	400	0.4-1.0 x I_n	2; 5; 10; 12 x I_n	35	**3VT85 40-1EA03-..H2**		50	**3VT85 40-2EA03-..H2**		65	**3VT85 40-3EA03-..H2**	
	500	0.4-1.0 x I_n	2; 5; 10; 12 x I_n	35	**3VT85 50-1EA03-..H2**		50	**3VT85 50-2EA03-..H2**		65	**3VT85 50-3EA03-..H2**	
	630	0.4-1.0 x I_n	2; 5; 10; 12 x I_n	35	**3VT85 63-1EA03-..H2**		50	**3VT85 63-2EA03-..H2**		65	**3VT85 63-3EA03-..H2**	

Withdrawable circuit-breakers with rear terminals for system and motor protection, thermal-magnetic overcurrent trip units

Type	Rated current I_n A	Setting current of inverse-time delayed overload release "L" I_R A	Setting current of instantaneous short-circuit release "I" I_i A	Standard switching capacity N I_{cu} at AC 415/440 V kA	Order No. / Order No. supplement required, see page 3/39	Basic Price	High switching capacity H I_{cu} at AC 415/440 V kA	Order No. / Order No. supplement required, see page 3/39	Basic Price	Very high switching capacity L I_{cu} at AC 415/440 V kA	Order No. / Order No. supplement required, see page 3/39	Basic Price
NSE0_00695	**Circuit-breakers for system protection, thermal-magnetic overcurrent trip unit, LI functions** with permanently set thermal overload releases, and permanently set short-circuit releases, rear terminals – screw version											
VT 400	250	250	2500	35	**3VT84 25-1AA03-..J2**		–			–		
	315	315	3150	35	**3VT84 31-1AA03-..J2**							
	400	400	4000	35	**3VT84 40-1AA03-..J2**							
NSE0_00703	**Circuit-breakers for system protection, thermal-magnetic overcurrent trip unit, LI functions** with adjustable thermal overload releases, and permanently set short-circuit releases, rear terminals – screw version											
VT 400	250	175 -250	2500	–			50	**3VT84 25-2BA03-..J2**		–		
	315	220.5-315	3150				50	**3VT84 31-2BA03-..J2**				
	400	280 -400	4000				50	**3VT84 40-2BA03-..J2**				
NSE0_00695	**Circuit-breakers for motor protection, thermal-magnetic overcurrent trip unit, LI functions** with permanently set thermal overload releases, and permanently set short-circuit releases, rear terminals – screw version											
VT 400	250	250	3000	35	**3VT84 25-1CA03-..J2**		–			–		
	315	315	3780	35	**3VT84 31-1CA03-..J2**							
	400	400	4800	35	**3VT84 40-1CA03-..J2**							
NSE0_00703	**Circuit-breakers for motor protection, thermal-magnetic overcurrent trip unit, LI functions** with adjustable thermal overload releases, and permanently set short-circuit releases, rear terminals – screw version											
VT 400	250	175 -250	3000	–			50	**3VT84 25-2DA03-..J2**		–		
	315	220.5-315	3780				50	**3VT84 31-2DA03-..J2**				
	400	280 -400	4800				50	**3VT84 40-2DA03-..J2**				
NSE0_00695	**Circuit-breakers for system protection, thermal-magnetic overcurrent trip unit, LI functions** with permanently set thermal overload releases, and permanently set short-circuit releases, rear terminals – horizontal											
VT 630	400	400	4000	35	**3VT85 40-1AA03-..K2**		50	**3VT85 40-2AA03-..K2**		65	**3VT85 40-3AA03-..K2**	
	500	500	5000	35	**3VT85 50-1AA03-..K2**		50	**3VT85 50-2AA03-..K2**		65	**3VT85 50-3AA03-..K2**	
	630	630	6300	35	**3VT85 63-1AA03-..K2**		50	**3VT85 63-2AA03-..K2**		65	**3VT85 63-3AA03-..K2**	
NSE0_00695	**Circuit-breakers for system protection, thermal-magnetic overcurrent trip unit, LI functions** with permanently set thermal overload releases, and permanently set short-circuit releases, rear terminals – vertical											
VT 630	400	400	4000	35	**3VT85 40-1AA03-..L2**		50	**3VT85 40-2AA03-..L2**		65	**3VT85 40-3AA03-..L2**	
	500	500	5000	35	**3VT85 50-1AA03-..L2**		50	**3VT85 50-2AA03-..L2**		65	**3VT85 50-3AA03-..L2**	
	630	630	6300	35	**3VT85 63-1AA03-..L2**		50	**3VT85 63-2AA03-..L2**		65	**3VT85 63-3AA03-..L2**	

3-pole

Withdrawable circuit-breakers with rear terminals for system and motor protection, electronic overcurrent trip units

Type	Rated current I_n A	Setting current of inverse-time delayed overload release "L" I_R A	Setting current of instantaneous short-circuit release "I" I_i A	Standard switching capacity N I_{cu} at AC 415/440 V kA	Order No. / Order No. supplement required, see page 3/39	Basic Price	High switching capacity H I_{cu} at AC 415/440 V kA	Order No. / Order No. supplement required, see page 3/39	Basic Price	Very high switching capacity L I_{cu} at AC 415/440 V kA	Order No. / Order No. supplement required, see page 3/39	Basic Price
NSE0_01422	**Circuit-breakers for system and motor protection, electronic overcurrent trip unit, LSI functions** with adjustable thermal overload releases, and adjustable short-circuit releases, rear terminal – screw version											
VT 400	250	0.4-1.0 x I_n	2; 5; 10; 12 x I_n	35	**3VT84 25-1EA03-..J2**		50	**3VT84 25-2EA03-..J2**			–	
	315	0.4-1.0 x I_n	2; 5; 10; 12 x I_n	35	**3VT84 31-1EA03-..J2**		50	**3VT84 31-2EA03-..J2**				
	400	0.4-1.0 x I_n	2; 5; 10; 12 x I_n	35	**3VT84 40-1EA03-..J2**		50	**3VT84 40-2EA03-..J2**				
NSE0_01422	**Circuit-breakers for system protection, electronic overcurrent trip unit, LSI functions** with adjustable thermal overload releases, and adjustable short-circuit releases, rear terminal – horizontal											
VT 630	400	0.4-1.0 x I_n	2; 5; 10; 12 x I_n	35	**3VT85 40-1EA03-..K2**		50	**3VT85 40-2EA03-..K2**		65	**3VT85 40-3EA03-..K2**	
	500	0.4-1.0 x I_n	2; 5; 10; 12 x I_n	35	**3VT85 50-1EA03-..K2**		50	**3VT85 50-2EA03-..K2**		65	**3VT85 50-3EA03-..K2**	
	630	0.4-1.0 x I_n	2; 5; 10; 12 x I_n	35	**3VT85 63-1EA03-..K2**		50	**3VT85 63-2EA03-..K2**		65	**3VT85 63-3EA03-..K2**	
NSE0_01422	**Circuit-breakers for system protection, electronic overcurrent trip unit, LSI functions** with adjustable thermal overload releases, and adjustable short-circuit releases, rear terminal – vertical											
VT 630	400	0.4-1.0 x I_n	2; 5; 10; 12 x I_n	35	**3VT85 40-1EA03-..L2**		50	**3VT85 40-2EA03-..L2**		65	**3VT85 40-3EA03-..L2**	
	500	0.4-1.0 x I_n	2; 5; 10; 12 x I_n	35	**3VT85 50-1EA03-..L2**		50	**3VT85 50-2EA03-..L2**		65	**3VT85 50-3EA03-..L2**	
	630	0.4-1.0 x I_n	2; 5; 10; 12 x I_n	35	**3VT85 63-1EA03-..L2**		50	**3VT85 63-2EA03-..L2**		65	**3VT85 63-3EA03-..L2**	

Fixed-mounted circuit-breakers for system protection, thermal-magnetic overcurrent trip units

Type	Rated current I_n A	Setting current of inverse-time delayed overload release "L" I_R A	Setting current of instantaneous short-circuit release "I" I_i A	Standard switching capacity N I_{cu} at AC 415/440 V kA	Order No. / Order No. supplement required, see page 3/39	Basic Price	High switching capacity H I_{cu} at AC 415/440 V kA	Order No. / Order No. supplement required, see page 3/39	Basic Price	Very high switching capacity L I_{cu} at AC 415/440 V	Order No. / Order No. supplement required, see page 3/39	Basic Price
NSE0_00695	**Circuit-breakers for system protection, thermal-magnetic overcurrent trip unit, LIN functions** with permanently set thermal overload releases, permanently set short-circuit releases, and with "N" overload and short-circuit releases (100%)											
VT 63	10	10	500	25	**3VT80 10-1AA04-..A2**		50	**3VT80 10-2AA04-..A2**		–		
	16	16	500	25	**3VT80 16-1AA04-..A2**		50	**3VT80 16-2AA04-..A2**				
	20	20	500	25	**3VT80 20-1AA04-..A2**		50	**3VT80 20-2AA04-..A2**				
	25	25	500	25	**3VT80 25-1AA04-..A2**		50	**3VT80 25-2AA04-..A2**				
	32	32	500	25	**3VT80 32-1AA04-..A2**		50	**3VT80 32-2AA04-..A2**				
	40	40	500	25	**3VT80 40-1AA04-..A2**		50	**3VT80 40-2AA04-..A2**				
	50	50	500	25	**3VT80 50-1AA04-..A2**		50	**3VT80 50-2AA04-..A2**				
	63	63	630	25	**3VT80 63-1AA04-..A2**		50	**3VT80 63-2AA04-..A2**				
NSE0_00695	**Circuit-breakers for system protection, thermal-magnetic overcurrent trip unit, LIN functions** with permanently set thermal overload releases, permanently set short-circuit releases, and with "N" overload and short-circuit releases (100%)											
VT 100	32	32	500	25	**3VT81 03-1AA04-..A2**		50	**3VT81 03-2AA04-..A2**		–		
	40	40	500	25	**3VT81 04-1AA04-..A2**		50	**3VT81 04-2AA04-..A2**				
	50	50	500	25	**3VT81 05-1AA04-..A2**		50	**3VT81 05-2AA04-..A2**				
	63	63	630	25	**3VT81 06-1AA04-..A2**		50	**3VT81 06-2AA04-..A2**				
	80	80	800	25	**3VT81 08-1AA04-..A2**		50	**3VT81 08-2AA04-..A2**				
	100	100	1000	25	**3VT81 10-1AA04-..A2**		50	**3VT81 10-2AA04-..A2**				
NSE0_00695	**Circuit-breakers for system protection, thermal-magnetic overcurrent trip unit, LIN functions** with permanently set thermal overload releases, permanently set short-circuit releases, and with "N" overload and short-circuit releases (100%)											
VT 160	32	32	500	35	**3VT82 03-1AA04-..A2**		–			–		
	40	40	500	35	**3VT82 04-1AA04-..A2**							
	50	50	500	35	**3VT82 05-1AA04-..A2**							
	63	63	630	35	**3VT82 06-1AA04-..A2**							
	80	80	800	35	**3VT82 08-1AA04-..A2**							
	100	100	1000	35	**3VT82 10-1AA04-..A2**							
	125	125	1250	35	**3VT82 12-1AA04-..A2**							
	160	160	1600	35	**3VT82 16-1AA04-..A2**							
NSE0_00703	**Circuit-breakers for system protection, thermal-magnetic overcurrent trip unit, LIN functions** with adjustable thermal overload releases, permanently set short-circuit releases, and with "N" overload and short-circuit releases (100%)											
VT 160	32	22.4- 32	500	–			50	**3VT82 03-2BA04-..A2**		–		
	40	28 - 40	500				50	**3VT82 04-2BA04-..A2**				
	50	35 - 50	500				50	**3VT82 05-2BA04-..A2**				
	63	44.1- 63	630				50	**3VT82 06-2BA04-..A2**				
	80	56 - 80	800				50	**3VT82 08-2BA04-..A2**				
	100	70 -100	1000				50	**3VT82 10-2BA04-..A2**				
	125	87.5-125	1250				50	**3VT82 12-2BA04-..A2**				
	160	112 -160	1600				50	**3VT82 16-2BA04-..A2**				

4-pole

Fixed-mounted circuit-breakers for system and motor protection, thermal-magnetic overcurrent trip units

Type	Rated current I_n A	Setting current of inverse-time delayed overload release "L" I_R A	Setting current of instantaneous short-circuit release "I" I_i A	Standard switching capacity N I_{cu} at AC 415/440 V kA	Order No. / Order No. supplement required, see page 3/39	Basic Price	High switching capacity H I_{cu} at AC 415/440 V kA	Order No. / Order No. supplement required, see page 3/39	Basic Price	Very high switching capacity L I_{cu} at AC 415/440 V kA	Order No. / Order No. supplement required, see page 3/39	Basic Price
NSE0_00695	**Circuit-breakers for system protection, thermal-magnetic overcurrent trip unit, LIN functions** with permanently set thermal overload releases, permanently set short-circuit releases, and with "N" overload and short-circuit releases (100%)											
VT 250	160	160	1600	35	**3VT83 16-1AA04-..A2**		–			–		
	200	200	2000	35	**3VT83 20-1AA04-..A2**							
	250	250	2500	35	**3VT83 25-1AA04-..A2**							
NSE0_00703	**Circuit-breakers for system protection, thermal-magnetic overcurrent trip unit, LIN functions** with adjustable thermal overload releases, permanently set short-circuit releases, and with "N" overload and short-circuit releases (100%)											
VT 250	160	112-160	1600	–			50	**3VT83 16-2BA04-..A2**		–		
	200	140-200	2000				50	**3VT83 20-2BA04-..A2**				
	250	175-250	2500				50	**3VT83 25-2BA04-..A2**				
NSE0_00695	**Circuit-breakers for system protection, thermal-magnetic overcurrent trip unit, LIN functions** with permanently set thermal overload releases, permanently set short-circuit releases, and with "N" overload and short-circuit releases (100%)											
VT 400	250	250	2500	35	**3VT84 25-1AA04-..A2**		–			–		
	315	315	3150	35	**3VT84 31-1AA04-..A2**							
	400	400	4000	35	**3VT84 40-1AA04-..A2**							
NSE0_00703	**Circuit-breakers for system protection, thermal-magnetic overcurrent trip unit, LIN functions** with adjustable thermal overload releases, permanently set short-circuit releases, and with "N" overload and short-circuit releases (100%)											
VT 400	250	175 -250	2500	–			50	**3VT84 25-2BA04-..A2**		–		
	315	220.5-315	3150				50	**3VT84 31-2BA04-..A2**				
	400	280 -400	4000				50	**3VT84 40-2BA04-..A2**				
NSE0_00695	**Circuit-breakers for system protection, thermal-magnetic overcurrent trip unit, LIN functions** with permanently set thermal overload releases, permanently set short-circuit releases, and with "N" overload and short-circuit releases (100%)											
VT 630	400	400	4000	35	**3VT85 40-1AA04-..A2**		50	**3VT85 40-2AA04-..A2**		65	**3VT85 40-3AA04-..A2**	
	500	500	5000	35	**3VT85 50-1AA04-..A2**		50	**3VT85 50-2AA04-..A2**		65	**3VT85 50-3AA04-..A2**	
	630	630	6300	35	**3VT85 63-1AA04-..A2**		50	**3VT85 63-2AA04-..A2**		65	**3VT85 63-3AA04-..A2**	

Fixed-mounted circuit-breakers for system and motor protection, electronic overcurrent trip units

Type	Rated current I_n A	Setting current of inverse-time delayed overload release "L" I_R A	Setting current of instantaneous short-circuit release "I" I_i A	Standard switching capacity N I_{cu} at AC 415/440 V kA	Order No. / Order No. supplement required, see page 3/39	Basic Price	High switching capacity H I_{cu} at AC 415/440 V kA	Order No. / Order No. supplement required, see page 3/39	Basic Price	Very high switching capacity L I_{cu} at AC 415/440 V kA	Order No. / Order No. supplement required, see page 3/39	Basic Price
NSE0_01422	**Circuit-breakers for system and motor protection, electronic overcurrent trip unit, LSIG functions** with adjustable thermal overload releases, and adjustable short-circuit releases											
VT 400	250	0.4-1.0 x I_n	2; 5; 10; 12 x I_n	35	**3VT84 25-1EA04-..A2**		50	**3VT84 25-2EA04-..A2**		–		
	315	0.4-1.0 x I_n	2; 5; 10; 12 x I_n	35	**3VT84 31-1EA04-..A2**		50	**3VT84 31-2EA04-..A2**				
	400	0.4-1.0 x I_n	2; 5; 10; 12 x I_n	35	**3VT84 40-1EA04-..A2**		50	**3VT84 40-2EA04-..A2**				
NSE0_01422	**Circuit-breakers for system protection, electronic overcurrent trip unit, LSIG functions** with adjustable thermal overload releases, and adjustable short-circuit releases											
VT 630	250	0.4-1.0 x I_n	2; 5; 10; 12 x I_n	35	**3VT85 40-1EA04-..A2**		50	**3VT85 40-2EA04-..A2**		65	**3VT85 40-3EA04-..A2**	
	315	0.4-1.0 x I_n	2; 5; 10; 12 x I_n	35	**3VT85 50-1EA04-..A2**		50	**3VT85 50-2EA04-..A2**		65	**3VT85 50-3EA04-..A2**	
	400	0.4-1.0 x I_n	2; 5; 10; 12 x I_n	35	**3VT85 63-1EA04-..A2**		50	**3VT85 63-2EA04-..A2**		65	**3VT85 63-3EA04-..A2**	

4-pole

Plug-in circuit-breakers with front terminals for system protection, thermal-magnetic overcurrent trip units

Type	Rated current I_n A	Setting current of inverse-time delayed overload release "L" I_R A	Setting current of instantaneous short-circuit release "I" I_i A	Standard switching capacity N I_{cu} at AC 415/440 V kA	Order No. / Order No. supplement required, see page 3/39	Basic Price	High switching capacity H I_{cu} at AC 415/440 V kA	Order No. / Order No. supplement required, see page 3/39	Basic Price	Very high switching capacity L I_{cu} at AC 415/440 V	Order No. / Order No. supplement required, see page 3/39	Basic Price
NSE0_00695	**Circuit-breakers for system protection, thermal-magnetic overcurrent trip unit, LIN functions** with permanently set thermal overload releases, permanently set short-circuit releases, and with "N" overload and short-circuit releases (100%)											
VT 160	32	32	500	35	**3VT82 03-1AA04-..F2**		–			–		
	40	40	500	35	**3VT82 04-1AA04-..F2**							
	50	50	500	35	**3VT82 05-1AA04-..F2**							
	63	63	630	35	**3VT82 06-1AA04-..F2**							
	80	80	800	35	**3VT82 08-1AA04-..F2**							
	100	100	1000	35	**3VT82 10-1AA04-..F2**							
	125	125	1250	35	**3VT82 12-1AA04-..F2**							
	160	160	1600	35	**3VT82 16-1AA04-..F2**							
NSE0_00703	**Circuit-breakers for system protection, thermal-magnetic overcurrent trip unit, LIN functions** with adjustable thermal overload releases, permanently set short-circuit releases, and with "N" overload and short-circuit releases (100%)											
VT 160	32	22.4- 32	500	–			50	**3VT82 03-2BA04-..F2**		–		
	40	28 - 40	500				50	**3VT82 04-2BA04-..F2**				
	50	35 - 50	500				50	**3VT82 05-2BA04-..F2**				
	63	44.1- 63	630				50	**3VT82 06-2BA04-..F2**				
	80	56 - 80	800				50	**3VT82 08-2BA04-..F2**				
	100	70 -100	1000				50	**3VT82 10-2BA04-..F2**				
	125	87.5-125	1250				50	**3VT82 12-2BA04-..F2**				
	160	112 -160	1600				50	**3VT82 16-2BA04-..F2**				

3

Plug-in circuit-breakers with front terminals for system and motor protection, thermal-magnetic overcurrent trip units

Type	Rated current I_n A	Setting current of inverse-time delayed overload release "L" I_R A	Setting current of instantaneous short-circuit release "I" I_i A	Standard switching capacity N I_{cu} at AC 415/440 V kA	Order No. / Order No. supplement required, see page 3/39	Basic Price	High switching capacity H I_{cu} at AC 415/440 V kA	Order No. / Order No. supplement required, see page 3/39	Basic Price	Very high switching capacity L I_{cu} at AC 415/440 V kA	Order No. / Order No. supplement required, see page 3/39	Basic Price
NSE0_00695	**Circuit-breakers for system protection, thermal-magnetic overcurrent trip unit, LIN functions** with permanently set thermal overload releases, permanently set short-circuit releases, and with "N" overload and short-circuit releases (100%)											
VT 250	160	160	1600	35	**3VT83 16-1AA04-..F2**		–			–		
	200	200	2000	35	**3VT83 20-1AA04-..F2**							
	250	250	2500	35	**3VT83 25-1AA04-..F2**							
NSE0_00703	**Circuit-breakers for system protection, thermal-magnetic overcurrent trip unit, LIN functions** with adjustable thermal overload releases, permanently set short-circuit releases, and with "N" overload and short-circuit releases (100%)											
VT 250	160	112-160	1600		–		50	**3VT83 16-2BA04-..F2**		–		
	200	140-200	2000				50	**3VT83 20-2BA04-..F2**				
	250	175-250	2500				50	**3VT83 25-2BA04-..F2**				
NSE0_00695	**Circuit-breakers for system protection, thermal-magnetic overcurrent trip unit, LIN functions** with permanently set thermal overload releases, permanently set short-circuit releases, and with "N" overload and short-circuit releases (100%)											
VT 400	250	250	2500	35	**3VT84 25-1AA04-..F2**		–			–		
	315	315	3150	35	**3VT84 31-1AA04-..F2**							
	400	400	4000	35	**3VT84 40-1AA04-..F2**							
NSE0_00703	**Circuit-breakers for system protection, thermal-magnetic overcurrent trip unit, LIN functions** with adjustable thermal overload releases, permanently set short-circuit releases, and with "N" overload and short-circuit releases (100%)											
VT 400	250	175 -250	2500		–		50	**3VT84 25-2BA04-..F2**		–		
	315	220.5-315	3150				50	**3VT84 31-2BA04-..F2**				
	400	280 -400	4000				50	**3VT84 40-2BA04-..F2**				

Plug-in circuit-breakers with front terminals for system and motor protection, electronic overcurrent trip units

Type	Rated current I_n A	Setting current of inverse-time delayed overload release "L" I_R A	Setting current of instantaneous short-circuit release "I" I_i A	Standard switching capacity N I_{cu} at AC 415/440 V kA	Order No. / Order No. supplement required, see page 3/39	Basic Price	High switching capacity H I_{cu} at AC 415/440 V kA	Order No. / Order No. supplement required, see page 3/39	Basic Price	Very high switching capacity L I_{cu} at AC 415/440 V kA	Order No. / Order No. supplement required, see page 3/39	Basic Price
NSE0_01422	**Circuit-breakers for system and motor protection, electronic overcurrent trip unit, LSIG functions** with adjustable thermal overload releases, and adjustable short-circuit releases											
VT 400	250	0.4-1.0 x I_n	2; 5; 10; 12 x I_n	35	**3VT84 25-1EA04-..F2**		50	**3VT84 25-2EA04-..F2**		–		
	315	0.4-1.0 x I_n	2; 5; 10; 12 x I_n	35	**3VT84 31-1EA04-..F2**		50	**3VT84 31-2EA04-..F2**				
	400	0.4-1.0 x I_n	2; 5; 10; 12 x I_n	35	**3VT84 40-1EA04-..F2**		50	**3VT84 40-2EA04-..F2**				

4-pole

Plug-in circuit-breakers with rear terminals for system protection, thermal-magnetic overcurrent trip units

Type	Rated current I_n A	Setting current of inverse-time delayed overload release "L" I_R A	Setting current of instantaneous short-circuit release "I" I_i A	Standard switching capacity N I_{cu} at AC 415/440 V kA	Order No. / Order No. supplement required, see page 3/39	Basic Price	High switching capacity H I_{cu} at AC 415/440 V kA	Order No. / Order No. supplement required, see page 3/39	Basic Price	Very high switching capacity L I_{cu} at AC 415/440 V	Order No. / Order No. supplement required, see page 3/39	Basic Price
NSE0_00695	**Circuit-breakers for system protection, thermal-magnetic overcurrent trip unit, LIN functions** with permanently set thermal overload releases, permanently set short-circuit releases, and with "N" overload and short-circuit releases (100%)											
VT 160	32	32	500	35	**3VT82 03-1AA04-..G2**		–			–		
	40	40	500	35	**3VT82 04-1AA04-..G2**							
	50	50	500	35	**3VT82 05-1AA04-..G2**							
	63	63	630	35	**3VT82 06-1AA04-..G2**							
	80	80	800	35	**3VT82 08-1AA04-..G2**							
	100	100	1000	35	**3VT82 10-1AA04-..G2**							
	125	125	1250	35	**3VT82 12-1AA04-..G2**							
	160	160	1600	35	**3VT82 16-1AA04-..G2**							
NSE0_00703	**Circuit-breakers for system protection, thermal-magnetic overcurrent trip unit, LIN functions** with adjustable thermal overload releases, permanently set short-circuit releases, and with "N" overload and short-circuit releases (100%)											
VT 160	32	22.4- 32	500		–		50	**3VT82 03-2BA04-..G2**			–	
	40	28 - 40	500				50	**3VT82 04-2BA04-..G2**				
	50	35 - 50	500				50	**3VT82 05-2BA04-..G2**				
	63	44.1- 63	630				50	**3VT82 06-2BA04-..G2**				
	80	56 - 80	800				50	**3VT82 08-2BA04-..G2**				
	100	70 -100	1000				50	**3VT82 10-2BA04-..G2**				
	125	87.5-125	1250				50	**3VT82 12-2BA04-..G2**				
	160	112 -160	1600				50	**3VT82 16-2BA04-..G2**				

3

Plug-in circuit-breakers with rear terminals for system and motor protection, thermal-magnetic overcurrent trip units

Type	Rated current I_n A	Setting current of inverse-time delayed overload release "L" I_R A	Setting current of instantaneous short-circuit release "I" I_i A	Standard switching capacity N I_{cu} at AC 415/440 V kA	Order No. / Order No. supplement required, see page 3/39	Basic Price	High switching capacity H I_{cu} at AC 415/440 V kA	Order No. / Order No. supplement required, see page 3/39	Basic Price	Very high switching capacity L I_{cu} at AC 415/440 V kA	Order No. / Order No. supplement required, see page 3/39	Basic Price
NSE0_00695	**Circuit-breakers for system protection, thermal-magnetic overcurrent trip unit, LIN functions** with permanently set thermal overload releases, permanently set short-circuit releases, and with "N" overload and short-circuit releases (100%)											
VT 250	160	160	1600	35	**3VT83 16-1AA04-..G2**		–			–		
	200	200	2000	35	**3VT83 20-1AA04-..G2**							
	250	250	2500	35	**3VT83 25-1AA04-..G2**							
NSE0_00703	**Circuit-breakers for system protection, thermal-magnetic overcurrent trip unit, LIN functions** with adjustable thermal overload releases, permanently set short-circuit releases, and with "N" overload and short-circuit releases (100%)											
VT 250	160	112-160	1600		–		50	**3VT83 16-2BA04-..G2**		–		
	200	140-200	2000				50	**3VT83 20-2BA04-..G2**				
	250	175-250	2500				50	**3VT83 25-2BA04-..G2**				
NSE0_00695	**Circuit-breakers for system protection, thermal-magnetic overcurrent trip unit, LIN functions** with permanently set thermal overload releases, permanently set short-circuit releases, and with "N" overload and short-circuit releases (100%)											
VT 400	250	250	2500	35	**3VT84 25-1AA04-..G2**		–			–		
	315	315	3150	35	**3VT84 31-1AA04-..G2**							
	400	400	4000	35	**3VT84 40-1AA04-..G2**							
NSE0_00703	**Circuit-breakers for system protection, thermal-magnetic overcurrent trip unit, LIN functions** with adjustable thermal overload releases, permanently set short-circuit releases, and with "N" overload and short-circuit releases (100%)											
VT 400	250	175 -250	2500		–		50	**3VT84 25-2BA04-..G2**		–		
	315	220.5-315	3150				50	**3VT84 31-2BA04-..G2**				
	400	280 -400	4000				50	**3VT84 40-2BA04-..G2**				

Plug-in circuit-breakers with rear terminals for system and motor protection, electronic overcurrent trip units

Type	Rated current I_n A	Setting current of inverse-time delayed overload release "L" I_R A	Setting current of instantaneous short-circuit release "I" I_i A	Standard switching capacity N I_{cu} at AC 415/440 V kA	Order No. / Order No. supplement required, see page 3/39	Basic Price	High switching capacity H I_{cu} at AC 415/440 V kA	Order No. / Order No. supplement required, see page 3/39	Basic Price	Very high switching capacity L I_{cu} at AC 415/440 V kA	Order No. / Order No. supplement required, see page 3/39	Basic Price
NSE0_01422	**Circuit-breakers for system and motor protection, electronic overcurrent trip unit, LSIG functions** with adjustable thermal overload releases, and adjustable short-circuit releases											
VT 400	250	0.4-1.0 x I_n	2; 5; 10; 12 x I_n	35	**3VT84 25-1EA04-..G2**		50	**3VT84 25-2EA04-..G2**		–		
	315	0.4-1.0 x I_n	2; 5; 10; 12 x I_n	35	**3VT84 31-1EA04-..G2**		50	**3VT84 31-2EA04-..G2**				
	400	0.4-1.0 x I_n	2; 5; 10; 12 x I_n	35	**3VT84 40-1EA04-..G2**		50	**3VT84 40-2EA04-..G2**				

4-pole

Withdrawable circuit-breakers with front terminals for system and motor protection, thermal-magnetic overcurrent trip units

Type	Rated current I_n A	Setting current of inverse-time delayed overload release "L" I_R A	Setting current of instantaneous short-circuit release "I" I_i A	Standard switching capacity N I_{cu} at AC 415/440 V kA	Order No. / Order No. supplement required, see page 3/39	Basic Price	High switching capacity H I_{cu} at AC 415/440 V kA	Order No. / Order No. supplement required, see page 3/39	Basic Price	Very high switching capacity L I_{cu} at AC 415/440 V kA	Order No. / Order No. supplement required, see page 3/39	Basic Price
NSE0_00695	**Circuit-breakers for system protection, thermal-magnetic overcurrent trip unit, LIN functions** with permanently set thermal overload releases, permanently set short-circuit releases, and with "N" overload and short-circuit releases (100%)											
VT 400	250	250	2500	35	**3VT84 25-1AA04-..H2**		–			–		
	315	315	3150	35	**3VT84 31-1AA04-..H2**							
	400	400	4000	35	**3VT84 40-1AA04-..H2**							
NSE0_00703	**Circuit-breakers for system protection, thermal-magnetic overcurrent trip unit, LIN functions** with adjustable thermal overload releases, permanently set short-circuit releases, and with "N" overload and short-circuit releases (100%)											
VT 400	250	175 -250	2500	–			50	**3VT84 25-2BA04-..H2**		–		
	315	220.5-315	3150				50	**3VT84 31-2BA04-..H2**				
	400	280 -400	4000				50	**3VT84 40-2BA04-..H2**				
NSE0_00695	**Circuit-breakers for system protection, thermal-magnetic overcurrent trip unit, LIN functions** with permanently set thermal overload releases, permanently set short-circuit releases, and with "N" overload and short-circuit releases (100%)											
VT 630	400	400	4000	35	**3VT85 40-1AA04-..H2**		50	**3VT85 40-2AA04-..H2**		65	**3VT85 40-3AA04-..H2**	
	500	500	5000	35	**3VT85 50-1AA04-..H2**		50	**3VT85 50-2AA04-..H2**		65	**3VT85 50-3AA04-..H2**	
	630	630	6300	35	**3VT85 63-1AA04-..H2**		50	**3VT85 63-2AA04-..H2**		65	**3VT85 63-3AA04-..H2**	

Withdrawable circuit-breakers with front terminals for system and motor protection, electronic overcurrent trip units

Type	Rated current I_n A	Setting current of inverse-time delayed overload release "L" I_R A	Setting current of instantaneous short-circuit release "I" I_i A	Standard switching capacity N I_{cu} at AC 415/440 V kA	Order No. / Order No. supplement required, see page 3/39	Basic Price	High switching capacity H I_{cu} at AC 415/440 V kA	Order No. / Order No. supplement required, see page 3/39	Basic Price	Very high switching capacity L I_{cu} at AC 415/440 V kA	Order No. / Order No. supplement required, see page 3/39	Basic Price
NSE0_01422	**Circuit-breakers for system and motor protection, electronic overcurrent trip unit, LSIG functions** with adjustable thermal overload releases, and adjustable short-circuit releases											
VT 400	250	0.4-1.0 x I_n	2; 5; 10; 12 x I_n	35	**3VT84 25-1EA04-..H2**		50	**3VT84 25-2EA04-..H2**		–		
	315	0.4-1.0 x I_n	2; 5; 10; 12 x I_n	35	**3VT84 31-1EA04-..H2**		50	**3VT84 31-2EA04-..H2**				
	400	0.4-1.0 x I_n	2; 5; 10; 12 x I_n	35	**3VT84 40-1EA04-..H2**		50	**3VT84 40-2EA04-..H2**				
NSE0_01422	**Circuit-breakers for system protection, electronic overcurrent trip unit, LSIG functions** with adjustable thermal overload releases, and adjustable short-circuit releases											
VT 630	250	0.4-1.0 x I_n	2; 5; 10; 12 x I_n	35	**3VT85 40-1EA04-..H2**		50	**3VT85 40-2EA04-..H2**		65	**3VT85 40-3EA04-..H2**	
	315	0.4-1.0 x I_n	2; 5; 10; 12 x I_n	35	**3VT85 50-1EA04-..H2**		50	**3VT85 50-2EA04-..H2**		65	**3VT85 50-3EA04-..H2**	
	400	0.4-1.0 x I_n	2; 5; 10; 12 x I_n	35	**3VT85 63-1EA04-..H2**		50	**3VT85 63-2EA04-..H2**		65	**3VT85 63-3EA04-..H2**	

Withdrawable circuit-breakers with rear terminals for system and motor protection, thermal-magnetic overcurrent trip units

Type	Rated current I_n A	Setting current of inverse-time delayed overload release "L" I_R A	Setting current of instantaneous short-circuit release "I" I_i A	Standard switching capacity N I_{cu} at AC 415/440 V kA	Order No. / Order No. supplement required, see page 3/39	Basic Price	High switching capacity H I_{cu} at AC 415/440 V kA	Order No. / Order No. supplement required, see page 3/39	Basic Price	Very high switching capacity L I_{cu} at AC 415/440 V kA	Order No. / Order No. supplement required, see page 3/39	Basic Price
NSE0_00695	**Circuit-breakers for system protection, thermal-magnetic overcurrent trip unit, LIN functions** with permanently set thermal overload releases, permanently set short-circuit releases, and with "N" overload and short-circuit releases (100%), rear terminals – screw version											
VT 400	250	250	2500	35	**3VT84 25-1AA04-..J2**		–			–		
	315	315	3150	35	**3VT84 31-1AA04-..J2**							
	400	400	4000	35	**3VT84 40-1AA04-..J2**							
NSE0_00703	**Circuit-breakers for system protection, thermal-magnetic overcurrent trip unit, LIN functions** with adjustable thermal overload releases, permanently set short-circuit releases, and with "N" overload and short-circuit releases (100%), rear terminals – screw version											
VT 400	250	175 -250	2500	–			50	**3VT84 25-2BA04-..J2**		–		
	315	220.5-315	3150				50	**3VT84 31-2BA04-..J2**				
	400	280 -400	4000				50	**3VT84 40-2BA04-..J2**				
NSE0_00695	**Circuit-breakers for system protection, thermal-magnetic overcurrent trip unit, LIN functions** with permanently set thermal overload releases, permanently set short-circuit releases, and with "N" overload and short-circuit releases (100%), rear terminals – horizontal											
VT 630	400	400	4000	35	**3VT85 40-1AA04-..K2**		50	**3VT85 40-2AA04-..K2**		65	**3VT85 40-3AA04-..K2**	
	500	500	5000	35	**3VT85 50-1AA04-..K2**		50	**3VT85 50-2AA04-..K2**		65	**3VT85 50-3AA04-..K2**	
	630	630	6300	35	**3VT85 63-1AA04-..K2**		50	**3VT85 63-2AA04-..K2**		65	**3VT85 63-3AA04-..K2**	
NSE0_00695	**Circuit-breakers for system protection, thermal-magnetic overcurrent trip unit, LIN functions** with permanently set thermal overload releases, permanently set short-circuit releases, and with "N" overload and short-circuit releases (100%), rear terminals – vertical											
VT 630	400	400	4000	35	**3VT85 40-1AA04-..L2**		50	**3VT85 40-2AA04-..L2**		65	**3VT85 40-3AA04-..L2**	
	500	500	5000	35	**3VT85 50-1AA04-..L2**		50	**3VT85 50-2AA04-..L2**		65	**3VT85 50-3AA04-..L2**	
	630	630	6300	35	**3VT85 63-1AA04-..L2**		50	**3VT85 63-2AA04-..L2**		65	**3VT85 63-3AA04-..L2**	

4-pole

Withdrawable circuit-breakers with rear terminals for system and motor protection, electronic overcurrent trip units

Type	Rated current I_n A	Setting current of inverse-time delayed overload release "L" I_R A	Setting current of instantaneous short-circuit release "I" I_i A	Standard switching capacity N I_{cu} at AC 415/440 V kA	Order No. / Order No. supplement required, see page 3/39	Basic Price	High switching capacity H I_{cu} at AC 415/440 V kA	Order No. / Order No. supplement required, see page 3/39	Basic Price	Very high switching capacity L I_{cu} at AC 415/440 V kA	Order No. / Order No. supplement required, see page 3/39	Basic Price
NSE0_01422	**Circuit-breakers for system and motor protection, electronic overcurrent trip unit, LSIG functions** with adjustable thermal overload releases, and adjustable short-circuit releases, rear terminals – screw version											
VT 400	250	0.4-1.0 x I_n	2; 5; 10; 12 x I_n	35	**3VT84 25-1EA04-..J2**		50	**3VT84 25-2EA04-..J2**			–	
	315	0.4-1.0 x I_n	2; 5; 10; 12 x I_n	35	**3VT84 31-1EA04-..J2**		50	**3VT84 31-2EA04-..J2**				
	400	0.4-1.0 x I_n	2; 5; 10; 12 x I_n	35	**3VT84 40-1EA04-..J2**		50	**3VT84 40-2EA04-..J2**				
NSE0_01422	**Circuit-breakers for system protection, electronic overcurrent trip unit, LSIG functions** with adjustable thermal overload releases, and adjustable short-circuit releases, rear terminals – horizontal											
VT 630	250	0.4-1.0 x I_n	2; 5; 10; 12 x I_n	35	**3VT85 40-1EA04-..K2**		50	**3VT85 40-2EA04-..K2**		65	**3VT85 40-3EA04-..K2**	
	315	0.4-1.0 x I_n	2; 5; 10; 12 x I_n	35	**3VT85 50-1EA04-..K2**		50	**3VT85 50-2EA04-..K2**		65	**3VT85 50-3EA04-..K2**	
	400	0.4-1.0 x I_n	2; 5; 10; 12 x I_n	35	**3VT85 63-1EA04-..K2**		50	**3VT85 63-2EA04-..K2**		65	**3VT85 63-3EA04-..K2**	
NSE0_01422	**Circuit-breakers for system protection, electronic overcurrent trip unit, LSIG functions** with adjustable thermal overload releases, and adjustable short-circuit releases, rear terminals – vertical											
VT 630	250	0.4-1.0 x I_n	2; 5; 10; 12 x I_n	35	**3VT85 40-1EA04-..L2**		50	**3VT85 40-2EA04-..L2**		65	**3VT85 40-3EA04-..L2**	
	315	0.4-1.0 x I_n	2; 5; 10; 12 x I_n	35	**3VT85 50-1EA04-..L2**		50	**3VT85 50-2EA04-..L2**		65	**3VT85 50-3EA04-..L2**	
	400	0.4-1.0 x I_n	2; 5; 10; 12 x I_n	35	**3VT85 63-1EA04-..L2**		50	**3VT85 63-2EA04-..L2**		65	**3VT85 63-3EA04-..L2**	

Selection and ordering data

Order No. supplement:
undervoltage release, shunt release, auxiliary switches (HS), and alarm switches (AS)

Rated control supply voltage U_s		Version	Order No. supplement	Circuit-breaker Type		
			3VT8 . . . - . . . . . - □□ . .	**For VT63 to VT160**	**For VT250 and VT400**	**For VT630**
				Additional price	Additional price	Additional price
Without auxiliary releases, Without alarm/auxiliary switches			**0 A**	none	none	none
With alarm switch (AS)/ auxiliary switch (HS)						
1 x HS			**0 B**			
1 x AS			**0 C**			
1 x HS + 1 x AS			**0 D**			
2 x HS			**0 E**			
2 x HS + 1 x AS			**0 F**	–	–	
With shunt release (ST)						
AC V	DC V					
220	–	1 x ST	**2 G**			
380	–		**3 G**			
–	110		**4 G**			
–	220		**5 G**			
220	–	1 x ST + 1 x HS	**2 H**			
380	–		**3 H**			
–	110		**4 H**			
–	220		**5 H**			
220	–	1 x ST + 1 x AS	**2 J**			
380	–		**3 J**			
–	110		**4 J**			
–	220		**5 J**			
220	–	1 x ST + 1 x HS + 1 x AS	**2 K**			
380	–		**3 K**			
–	110		**4 K**			
–	220		**5 K**			
With undervoltage release (UVR [1])						
AC V	DC V					
220	–	1 x UVR	**2 L**			
380	–		**3 L**			
–	110		**4 L**			
220	–	1 x UVR + 1 x HS	**2 M**			
380	–		**3 M**			
–	110		**4 M**			
220	–	1 x UVR + 1 x AS	**2 N**			
380	–		**3 N**			
–	110		**4 N**			
220	–	1 x UVR + 1 x HS + 1 x AS	**2 P**			
380	–		**3 P**			
–	110		**4 P**			

– not available

1) Attached version for frame sizes VT63 to VT160.
Embedded version for frame sizes VT250 to VT630.

Accessories/spare parts

Selection and ordering data

	Order No.	Basic Price	Order No.	Basic Price	Order No.	Basic Price
Operating mechanisms						
	For VT63		**For VT100**		**For VT160**	
Door-coupling rotary mechanism, complete instalation in doors and covers degree of protection IP30, black, with handle, extension shaft and front-operated rotary operating mechanism for circuit-breaker	**3VT9 100-3MG12**		**3VT9 100-3MG12**		**3VT9 200-3MG12**	
Motorized operating mechanism equipped with emergency opening button Rated control supply voltage U_s AC V / DC V						
220 / 220	**–**		**–**		**3VT9 200-3MN22**	
– / 110					**3VT9 200-3MN42**	
	For VT250		**For VT400**		**For VT630**	
Front-operated rotary operating mechanism for direct mounting on the circuit-breaker, degree of protection IP30, black, key lock for circuit-breaker in open position	**3VT9 300-3MC12**		**3VT9 400-3MC12**		**3VT9 500-3MC12**	
Door-coupling rotary mechanism, complete instalation in doors and covers degree of protection IP30, black, with handle, extension shaft and front-operated rotary operating mechanism for circuit-breaker	**3VT9 300-3MG12**		**3VT9 400-3MG12**		**3VT9 500-3MG12**	
Interlock between rotary mechanism and compartment door for use with front-operated or door-coupling rotary mechanism.	**3VT9 300-3MR12**		**3VT9 400-3MR12**		**3VT9 500-3MR12**	
Motorized operating mechanism equipped with emergency opening button Rated control supply voltage U_s AC V / DC V						
220 / 220	**3VT9 300-3MN22**		**3VT9 500-3MN22**		**3VT9 500-3MN22**	
– / 110	**3VT9 300-3MN42**		**3VT9 500-3MN42**		**3VT9 500-3MN42**	

		For VT63		For VT100		For VT160	
		Order No.	Basic Price	Order No.	Basic Price	Order No.	Basic Price
Connection parts for fixed-mounted circuit-breakers / Plug-in version / Withdrawable version							
Extended front connecting bars for fixed-mounted circuit-breakers							
1 set = 6 units	3-pole	**3VT9 100-1CB32**		**3VT9 100-1CB32**		**3VT9 200-1CB32**	
1 set = 8 units	4-pole	**3VT9 100-1CB42**		**3VT9 100-1CB42**		**3VT9 200-1CB42**	
Rear-mounting terminals (screw) for fixed-mounted circuit-breakers							
1 set = 6 units	3-pole	**3VT9 100-1CC32**		**3VT9 100-1CC32**		**3VT9 200-1CC32**	
1 set = 8 units	4-pole	**3VT9 100-1CC42**		**3VT9 100-1CC42**		**3VT9 200-1CC42**	
Phase barriers							
1 set = 4 units	3-pole	**3VT9 100-1CM32**		**3VT9 100-1CM32**		**3VT9 200-1CM32**	
1 set = 6 units	4-pole	**3VT9 100-1CM42**		**3VT9 100-1CM42**		**3VT9 200-1CM42**	
Terminal covers							
1 set = 2 units	3-pole	**3VT9 100-1CN32**		**3VT9 100-1CN32**		**3VT9 200-1CN32**	
1 set = 2 units	4-pole	**3VT9 100-1CN42**		**3VT9 100-1CN42**		**3VT9 200-1CN42**	

		For VT250		For VT400		For VT630	
		Order No.	Basic Price	Order No.	Basic Price	Order No.	Basic Price
Connection parts for fixed-mounted circuit-breakers / Plug-in version / Withdrawable version							
Extended front connecting bars for fixed-mounted circuit-breakers							
1 set = 6 units	3-pole	**3VT9 300-1CB32**		**3VT9 400-1CB32**		**3VT9 500-1CB32**	
1 set = 8 units	4-pole	**3VT9 300-1CB42**		**3VT9 400-1CB42**		**3VT9 500-1CB42**	
Rear-mounting terminals (screw) for fixed-mounted circuit-breakers							
1 set = 6 units	3-pole	**3VT9 300-1CC32**		**3VT9 400-1CC32**		**3VT9 500-1CC32**	
1 set = 8 units	4-pole	**3VT9 300-1CC42**		**3VT9 400-1CC42**		**3VT9 500-1CC42**	
Phase barriers							
1 set = 4 units	3-pole	**3VT9 300-1CM32**		**3VT9 400-1CM32**		**3VT9 500-1CM32**	
1 set = 6 units	4-pole	**3VT9 300-1CM42**		**3VT9 400-1CM42**		**3VT9 500-1CM42**	
Terminal covers							
1 set = 2 units	3-pole	**3VT9 300-1CN32**		**3VT9 400-1CN32**		**3VT9 500-1CN32**	
1 set = 2 units	4-pole	**3VT9 300-1CN42**		**3VT9 400-1CN42**		**3VT9 500-1CN42**	

Project planning aids

Characteristic curves

The indicated tripping values for the inverse-time delayed overcurrent trip units (thermal overload releases, "L" trip units) are mean values taken from the spread of all setting ranges from the cold state and under even load conditions on the conducting paths.

The tripping characteristics of the instantaneous (electromagnetic) short-circuit releases ("I" trip units) are based on the phase rated current In, which also represents the upper value of the setting range on circuit-breakers with adjustable thermal overload release. With a lower operating current there is a correspondingly higher multiple for the tripping current of the "I" trip unit.

"L" thermal overload release

"I" instantaneous (electromagnetic) short-circuit release

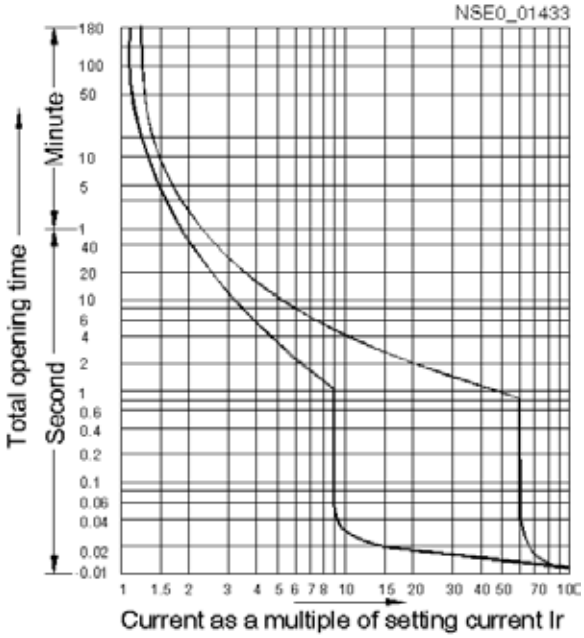

Tripping characteristic for VT63 circuit-breaker

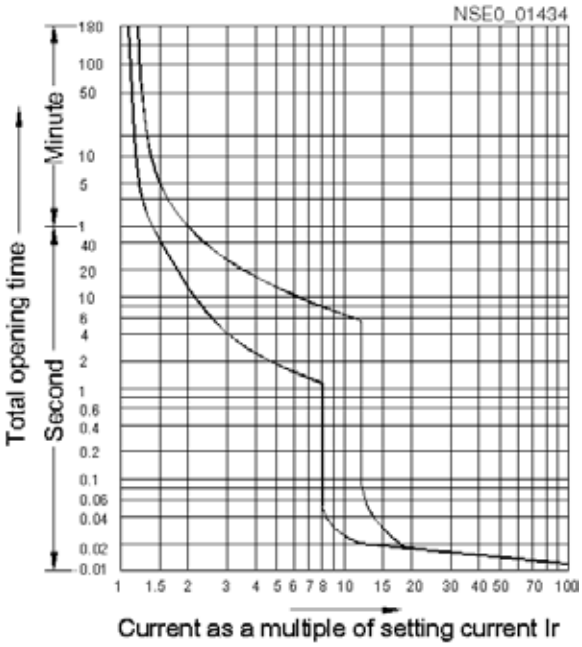

Tripping characteristic for VT100 circuit-breaker

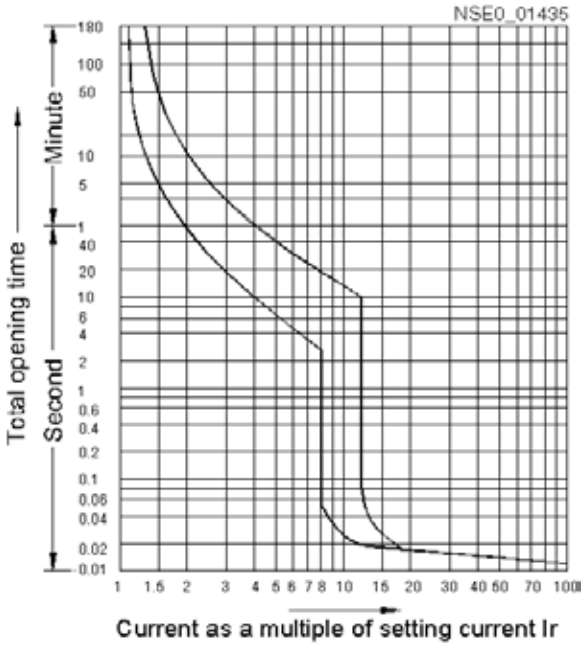

Tripping characteristic for VT160 circuit-breaker

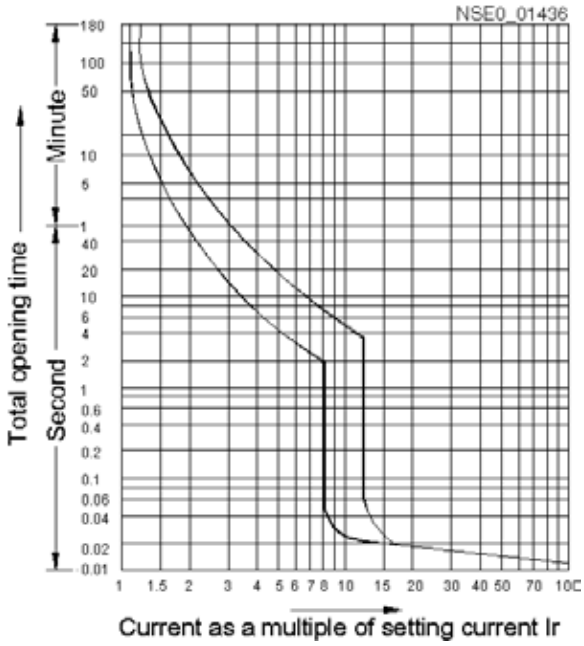

Tripping characteristic for VT250 circuit-breaker

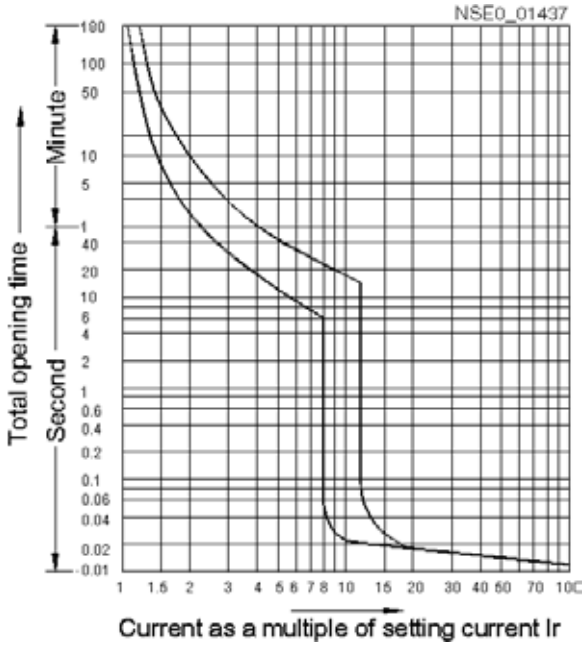

Tripping characteristic for VT400 circuit-breaker

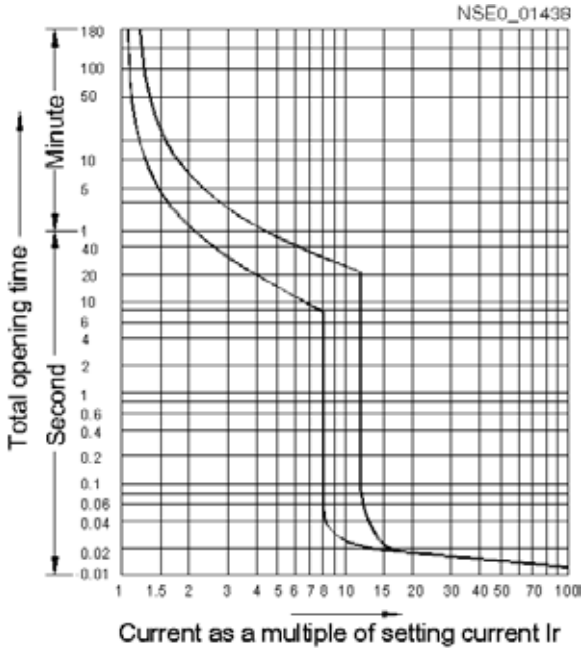

Tripping characteristic for VT630 circuit-breaker

Project planning aids

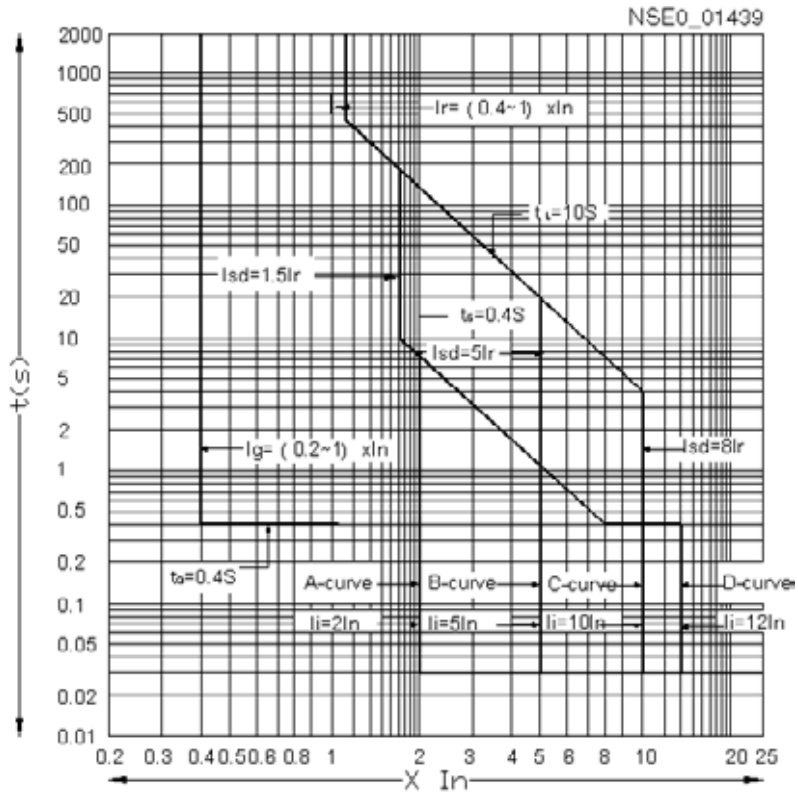

Protective Curve of ETU (I^2t ON)

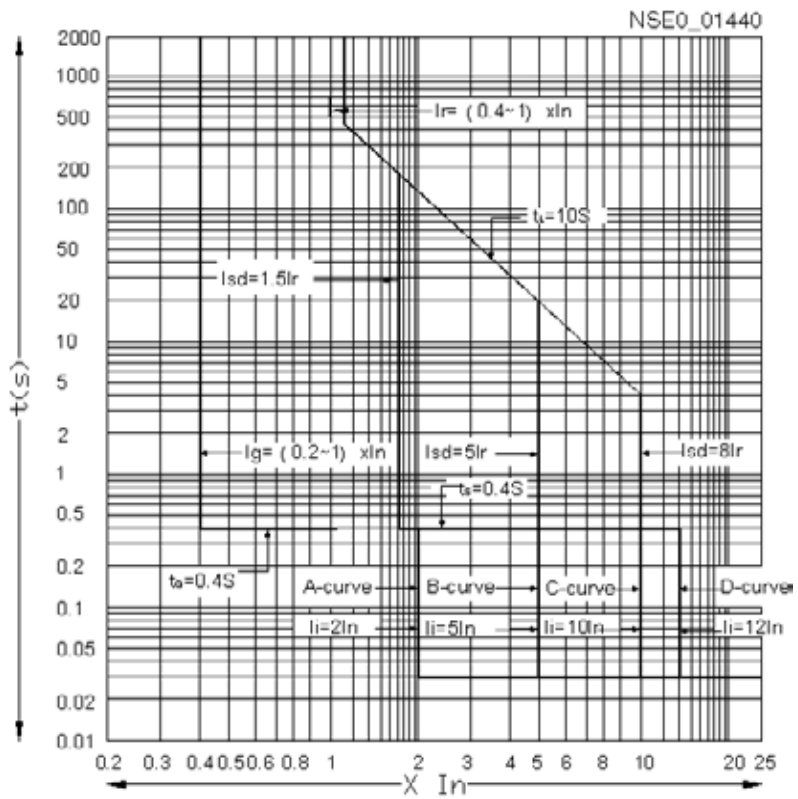

Protective Curve of ETU (I^2t OFF)

Dimensional drawings

Fixed-mounted version VT63, VT100 standard switching capacity N

Front terminals
Thermal-magnetic overcurrent trip units

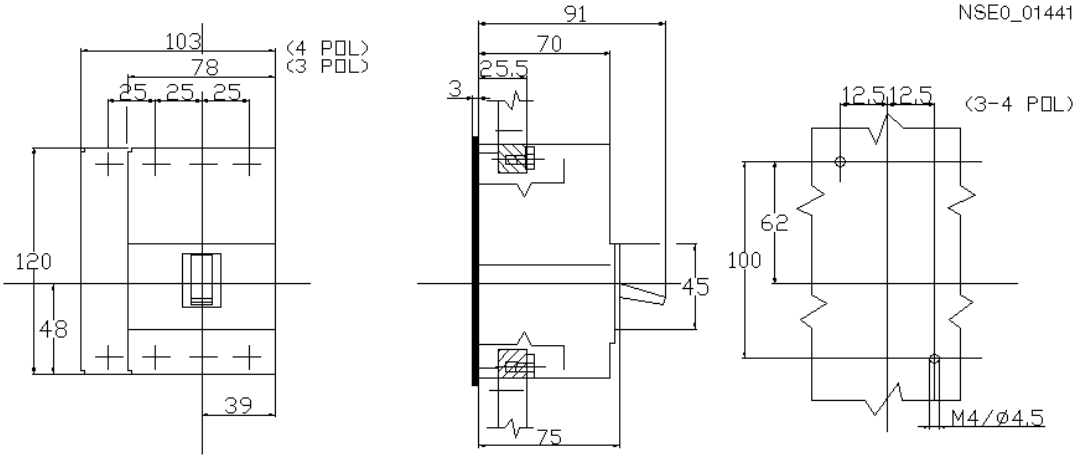

Rear terminals
Thermal-magnetic overcurrent trip units

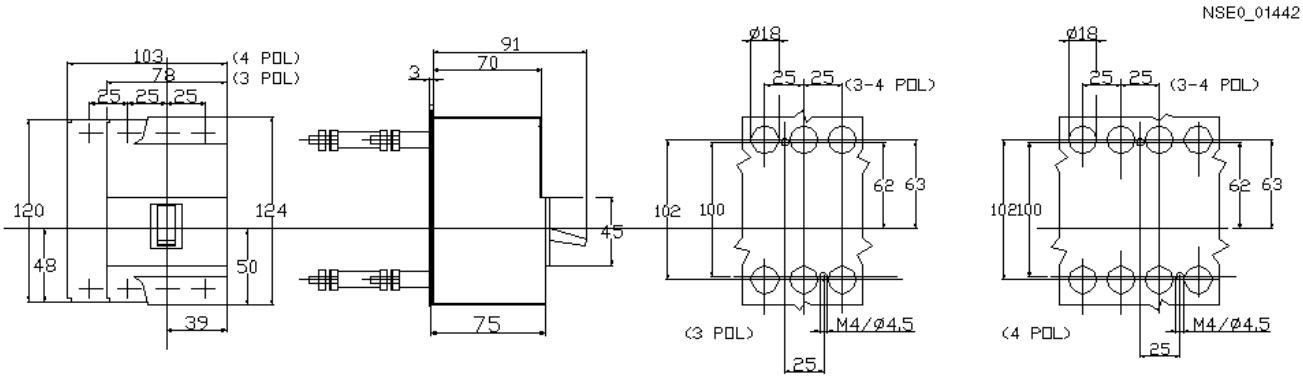

Extended front terminals
Thermal-magnetic overcurrent trip units

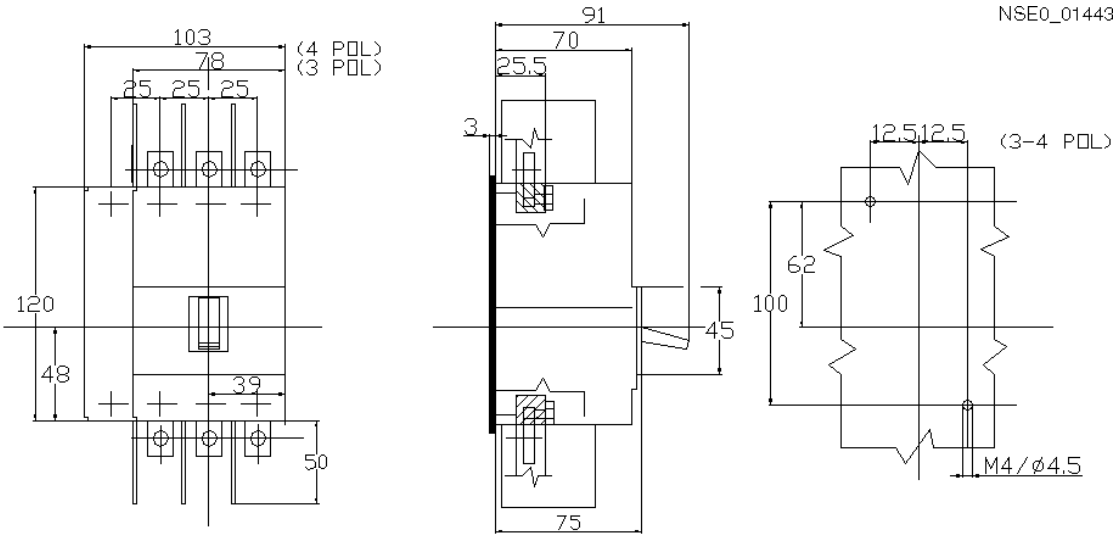

Project planning aids

Fixed-mounted version VT63, VT100 high switching capacity H

Front terminals
Thermal-magnetic overcurrent trip units

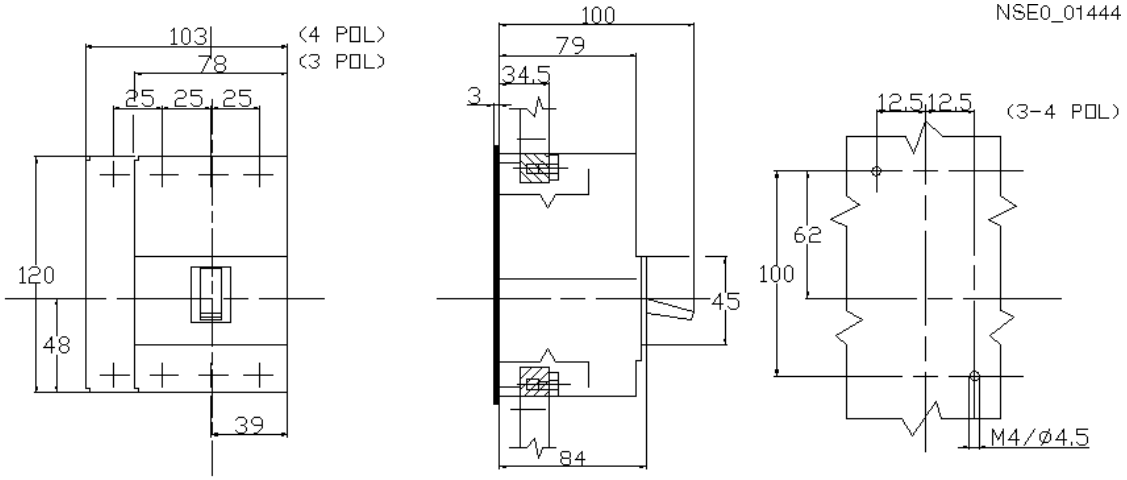

Rear terminals for screw connection
Thermal-magnetic overcurrent trip units

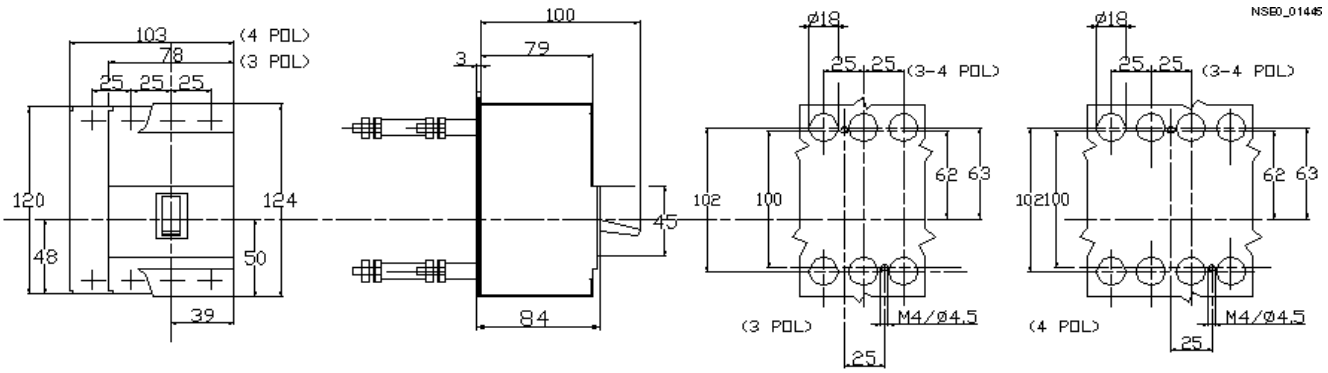

Extended front terminals
Thermal-magnetic overcurrent trip units

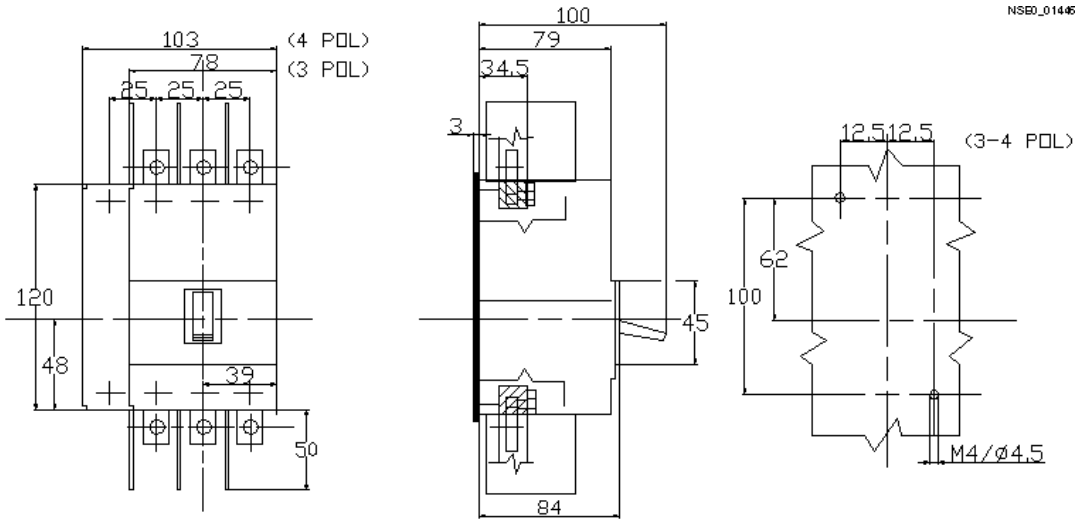

Fixed-mounted version VT160 standard switching capacity N

Front terminals
Thermal-magnetic overcurrent trip units

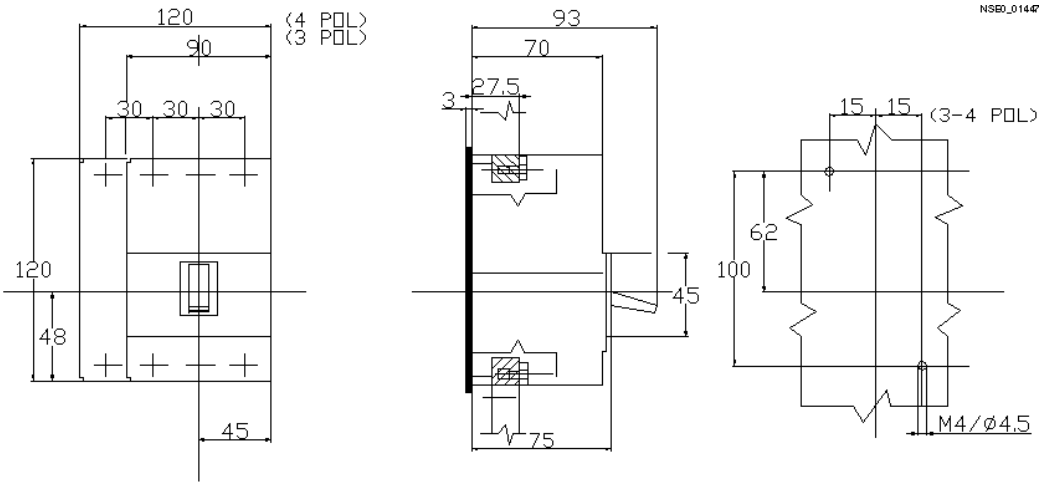

Rear terminals for screw connection
Thermal-magnetic overcurrent trip units

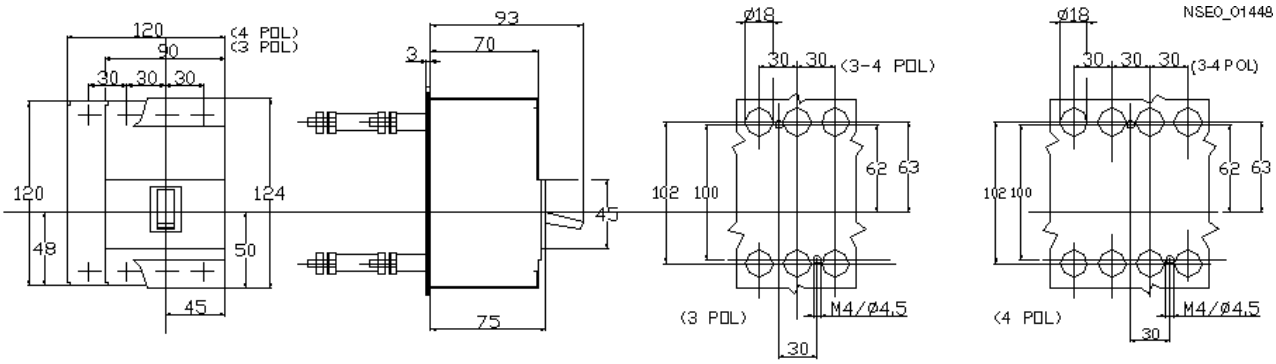

Extended front terminals
Thermal-magnetic overcurrent trip units

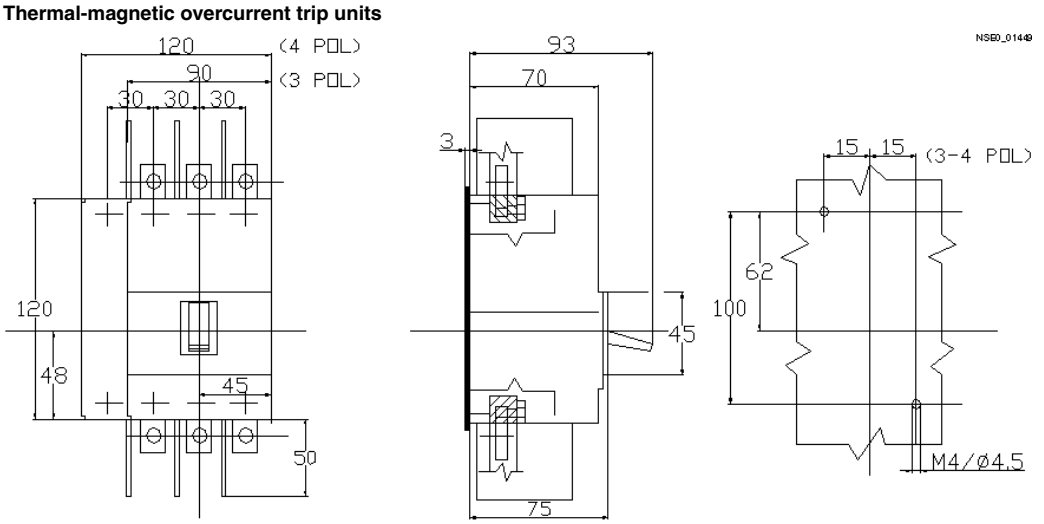

Project planning aids

Plug-in version VT160 standard switching capacity N

Front terminals
Thermal-magnetic overcurrent trip units

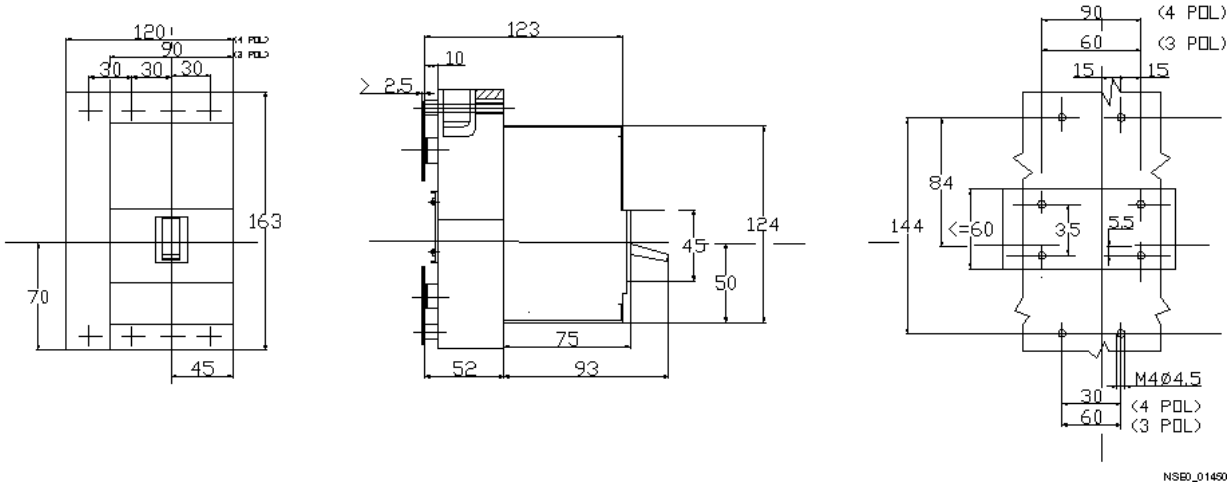

Rear terminals for screw connection
Thermal-magnetic overcurrent trip units

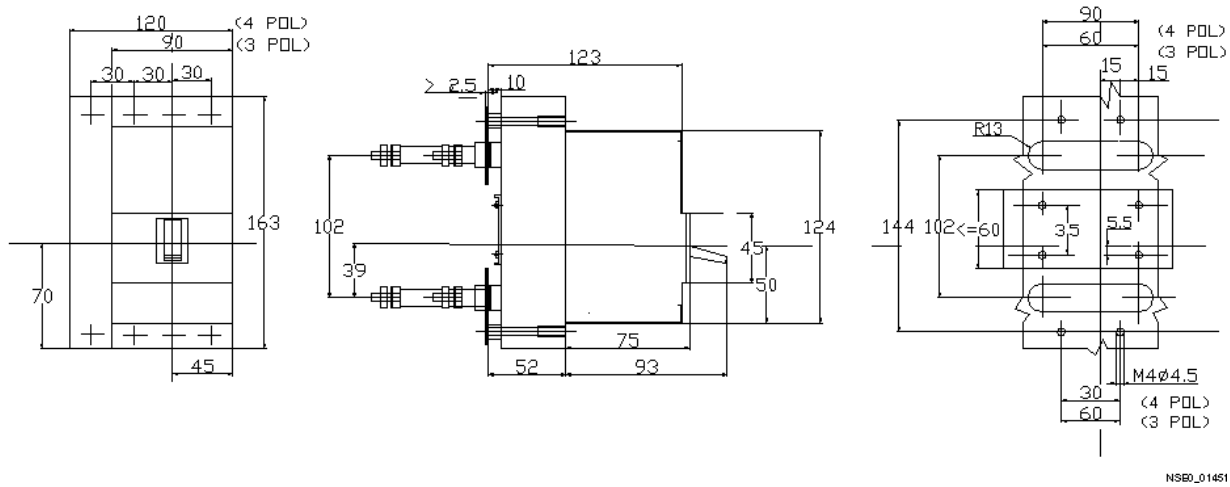

3

Fixed-mounted version VT160 high switching capacity H

Front terminals
Thermal-magnetic overcurrent trip units

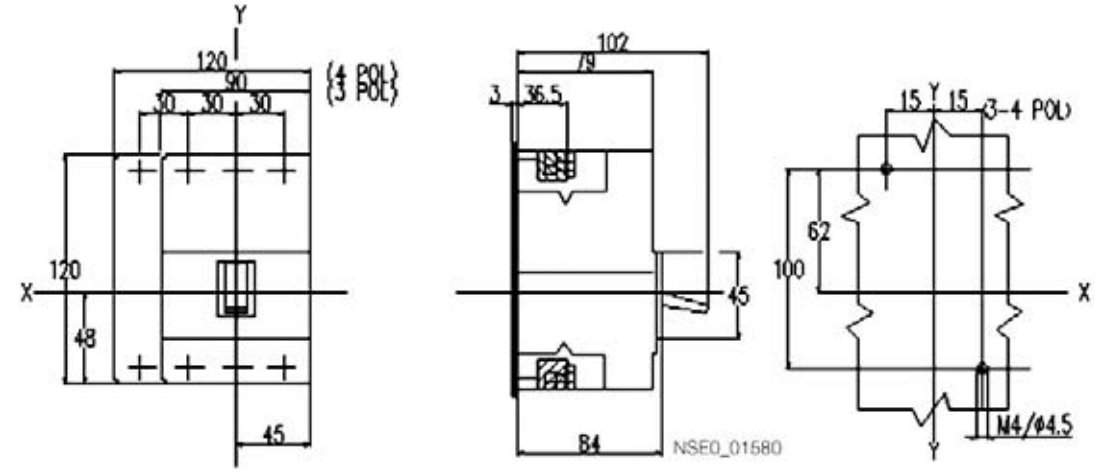

Rear terminals for screw connection
Thermal-magnetic overcurrent trip units

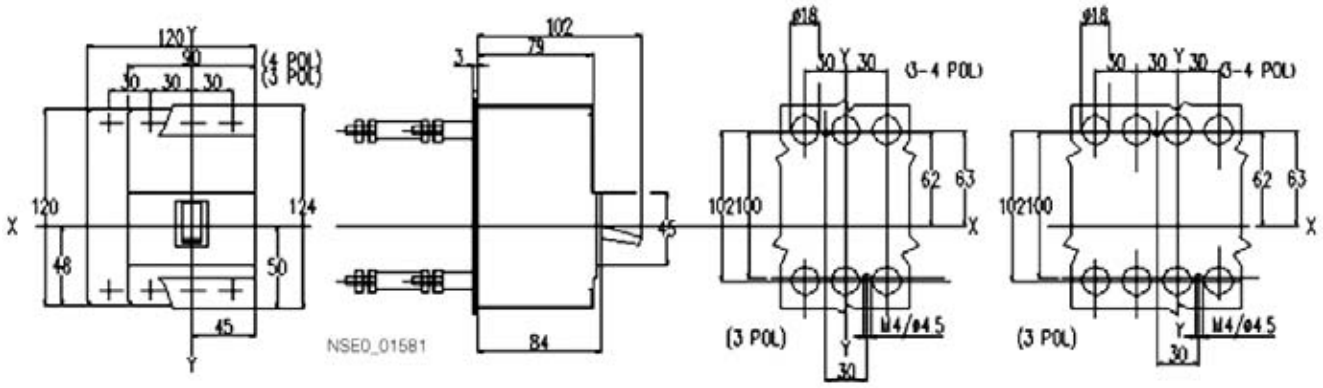

Extended front terminals
Thermal-magnetic overcurrent trip units

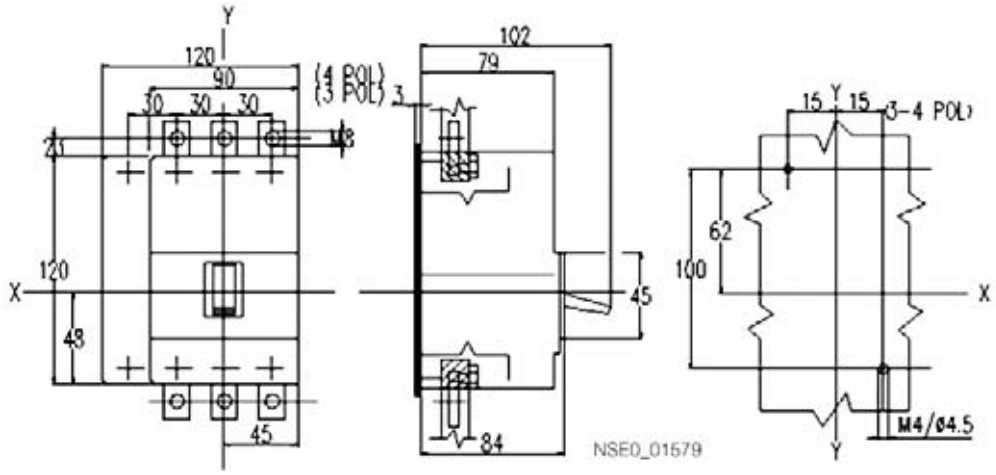

Project planning aids

Plug-in version VT160 high switching capacity H

Front terminals
Thermal-magnetic overcurrent trip units

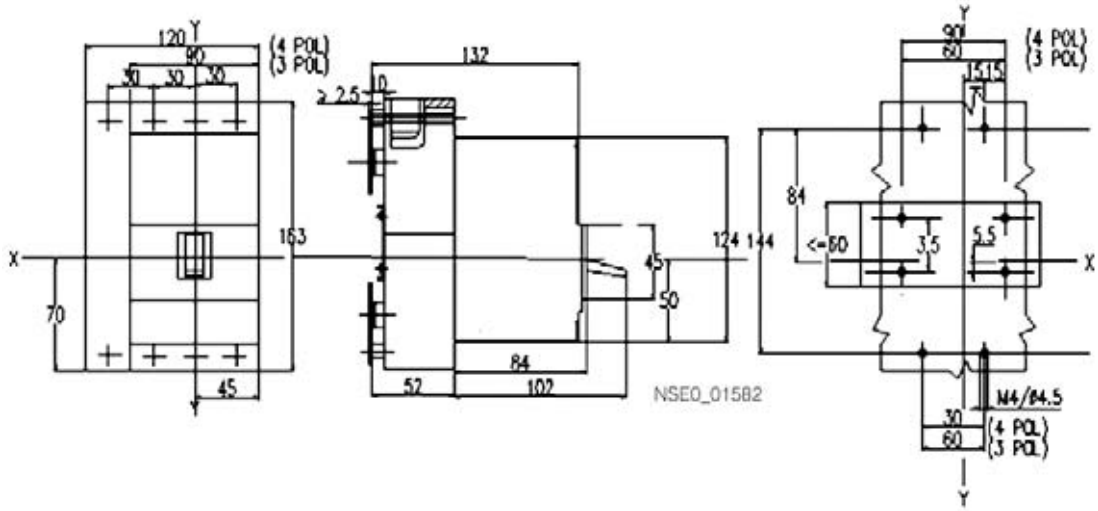

3

Rear terminals for screw connection
Thermal-magnetic overcurrent trip units

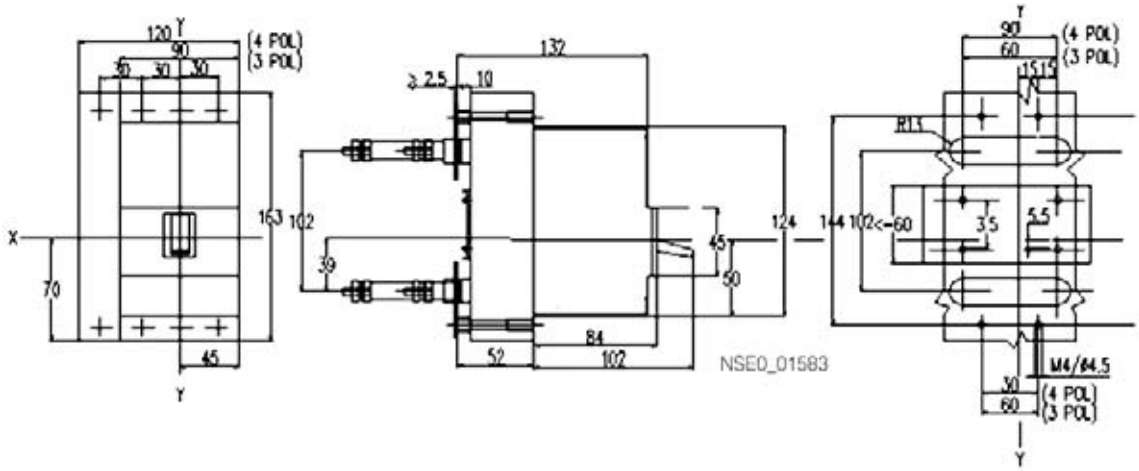

Fixed-mounted version VT250 standard switching capacity N and high switching capacity H

Front terminals
Thermal-magnetic overcurrent trip units

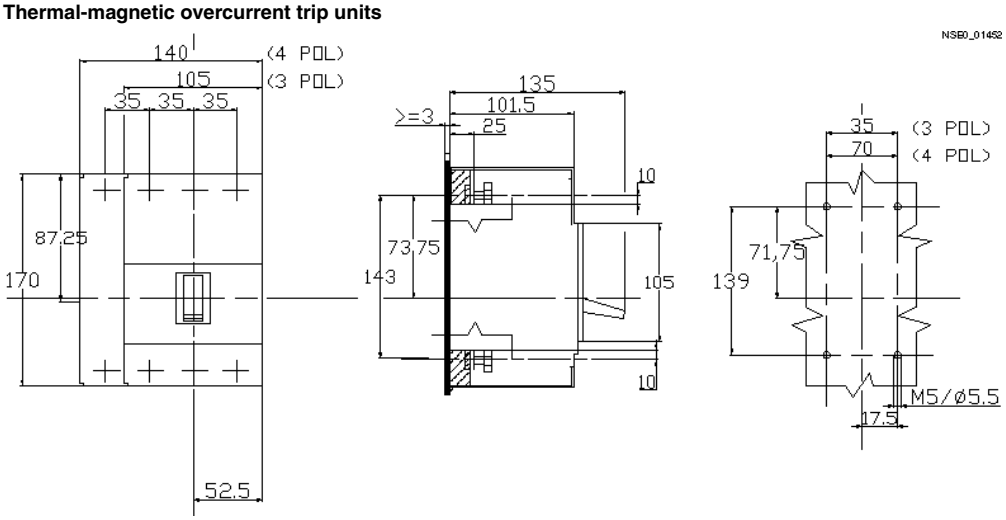

Rear terminals for screw connection
Thermal-magnetic overcurrent trip units

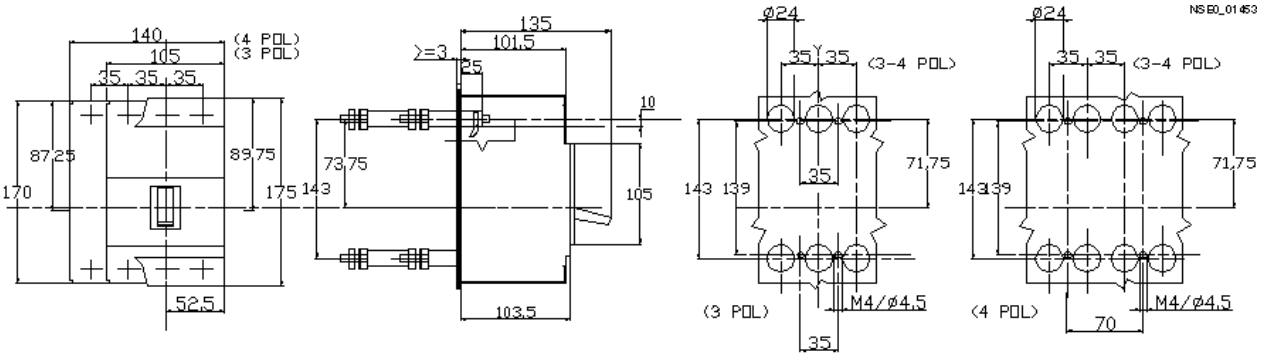

Extended front terminals
Thermal-magnetic overcurrent trip units

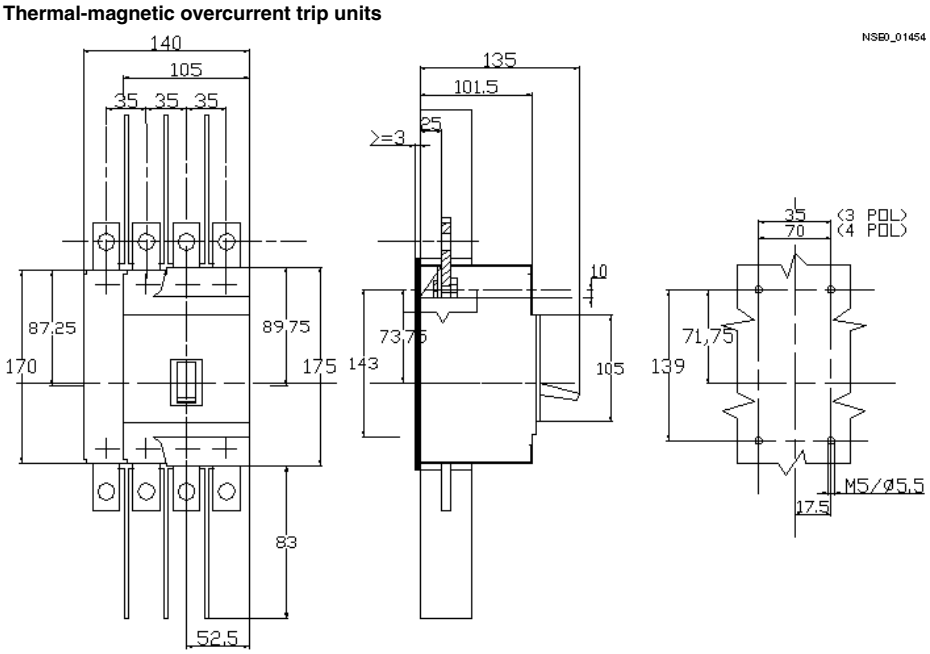

Project planning aids

Plug-in version VT250 standard switching capacity N and high switching capacity H

Front terminals
Thermal-magnetic overcurrent trip units

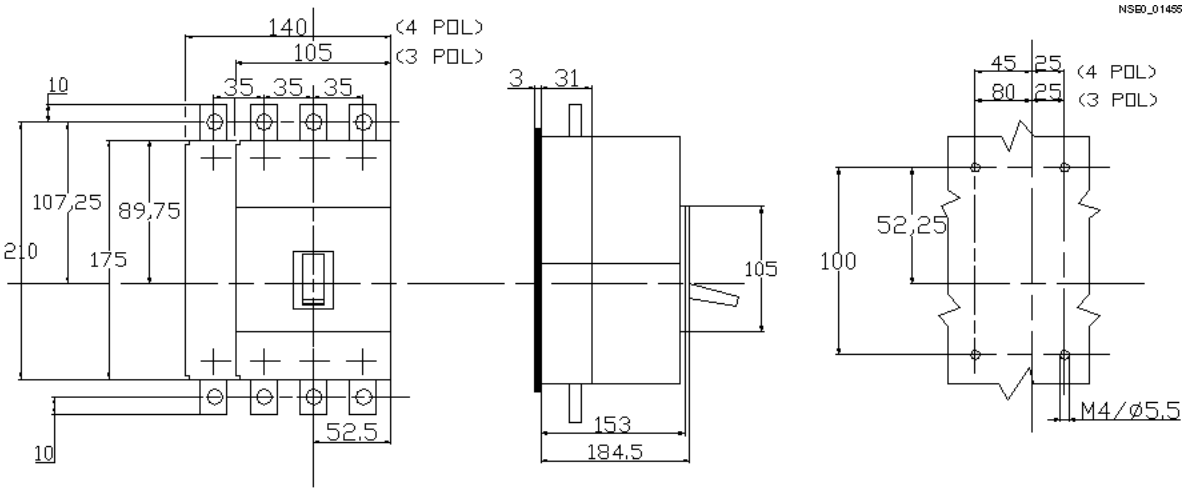

Rear terminals for screw connection
Thermal-magnetic overcurrent trip units

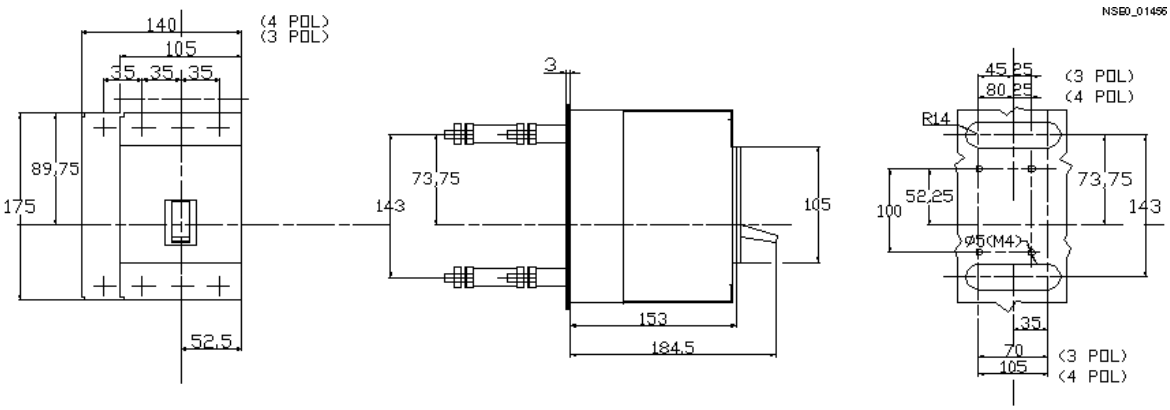

3

Fixed-mounted version VT250 standard switching capacity N and high switching capacity H

Front terminals
Electronic overcurrent trip units

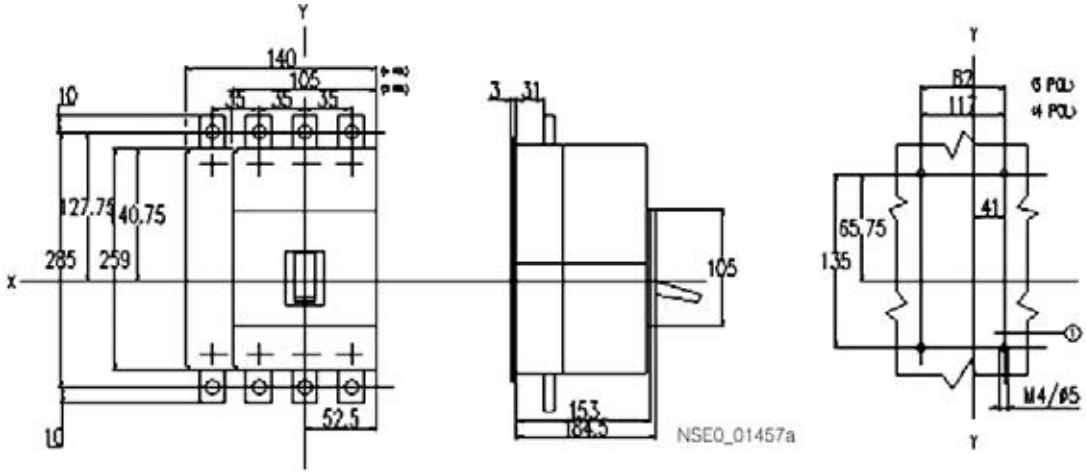

Rear terminals for screw connection
Electronic overcurrent trip units

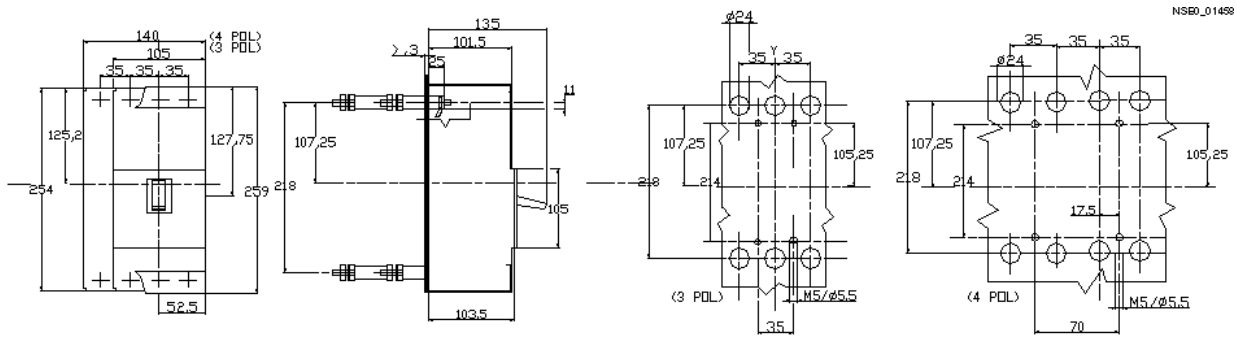

Extended front terminals
Electronic overcurrent trip units

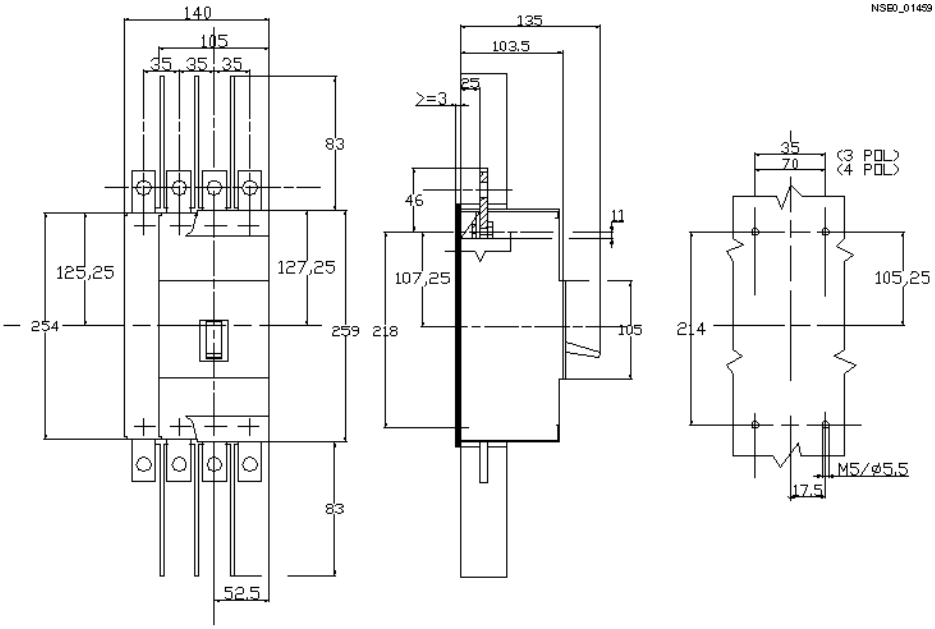

Project planning aids

Plug-in version VT250 standard switching capacity N and high switching capacity H

Front terminals
Electronic overcurrent trip units

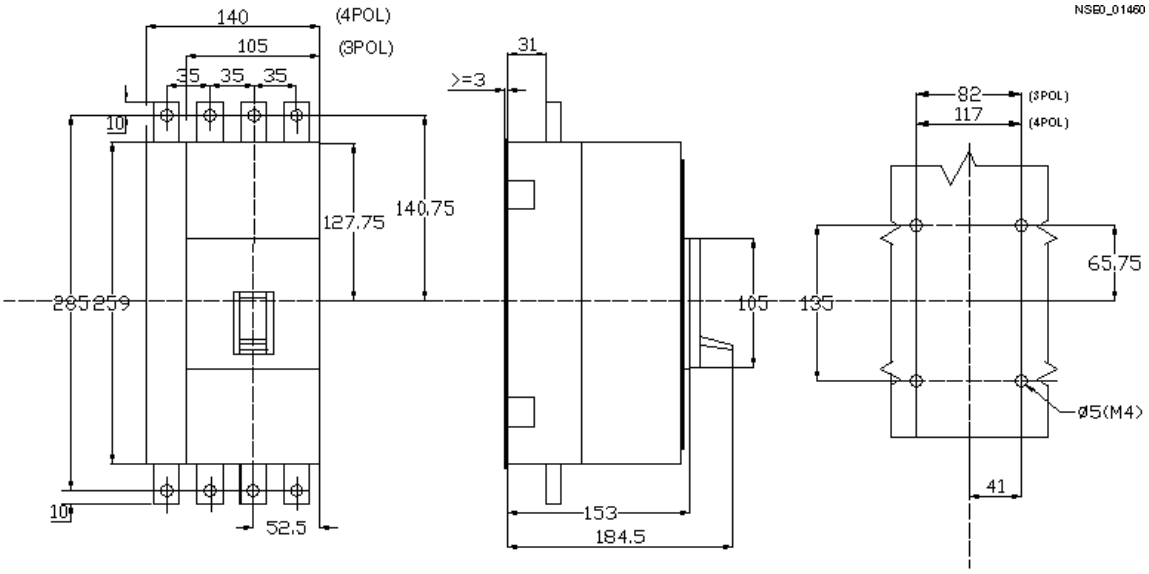

Rear terminals for screw connection
Electronic overcurrent trip units

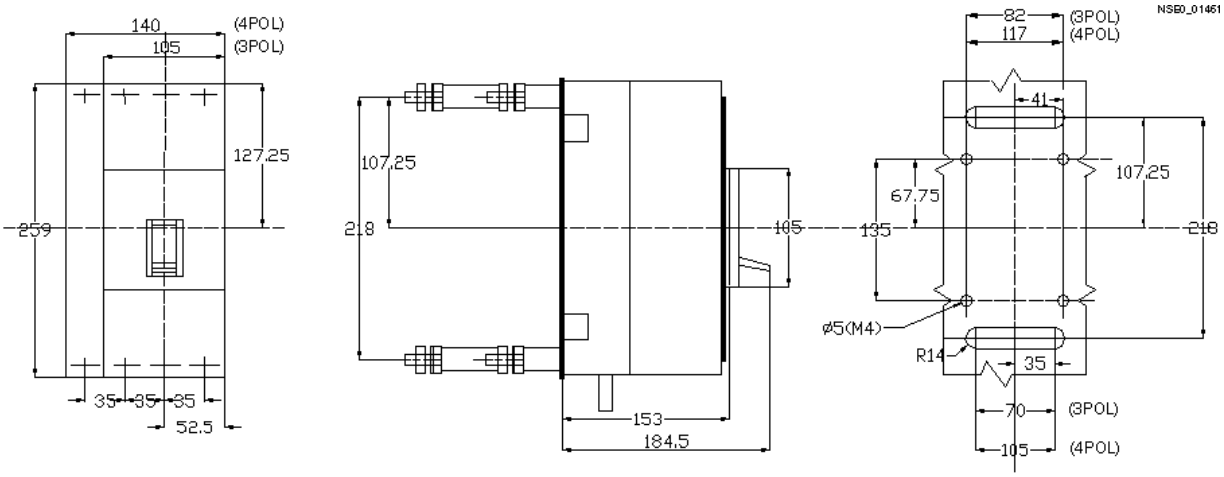

Fixed-mounted version VT400 standard switching capacity N and high switching capacity H

Front terminals
Thermal-magnetic and electronic overcurrent trip units

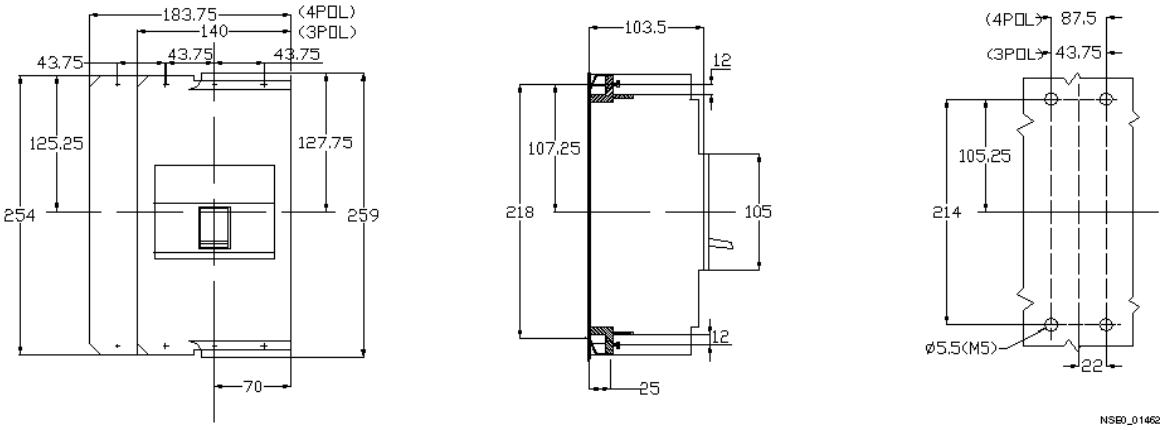

Rear terminals for screw connection
Thermal-magnetic and electronic overcurrent trip units

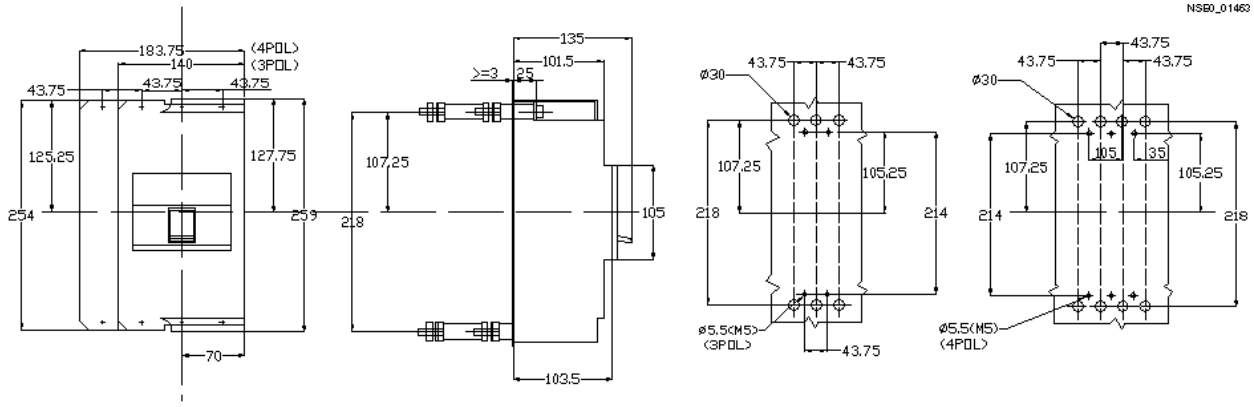

Extended front terminals
Thermal-magnetic and electronic overcurrent trip units

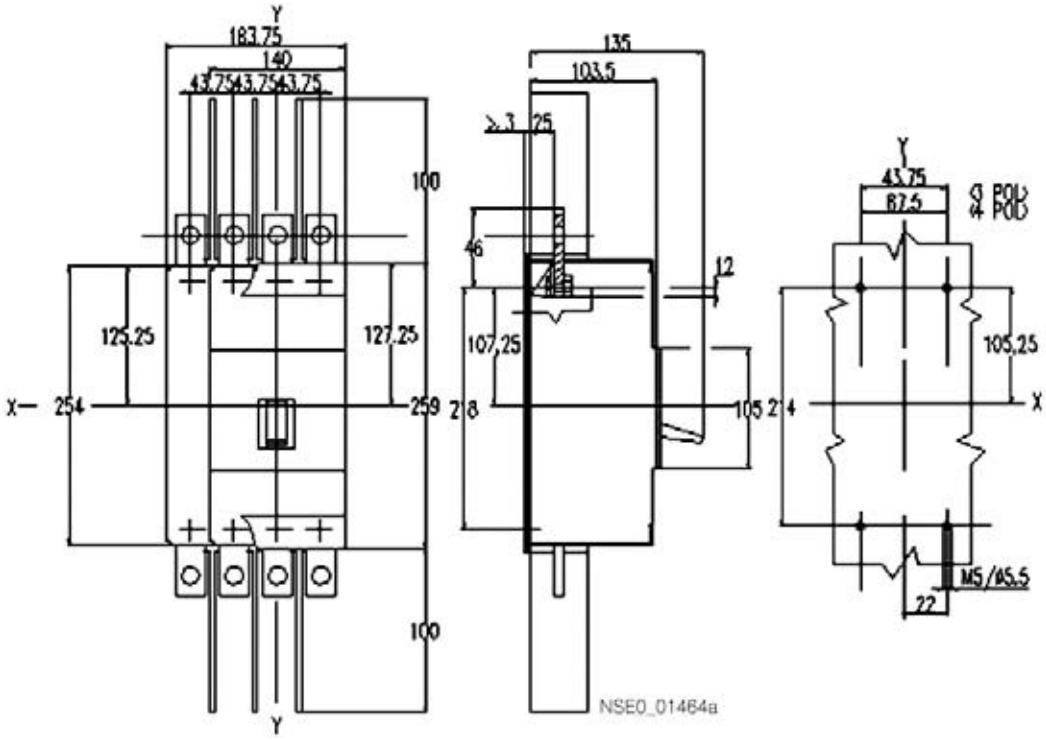

Project planning aids

Plug-in version VT400 standard switching capacity N and high switching capacity H

Front terminals
Thermal-magnetic and electronic overcurrent trip units

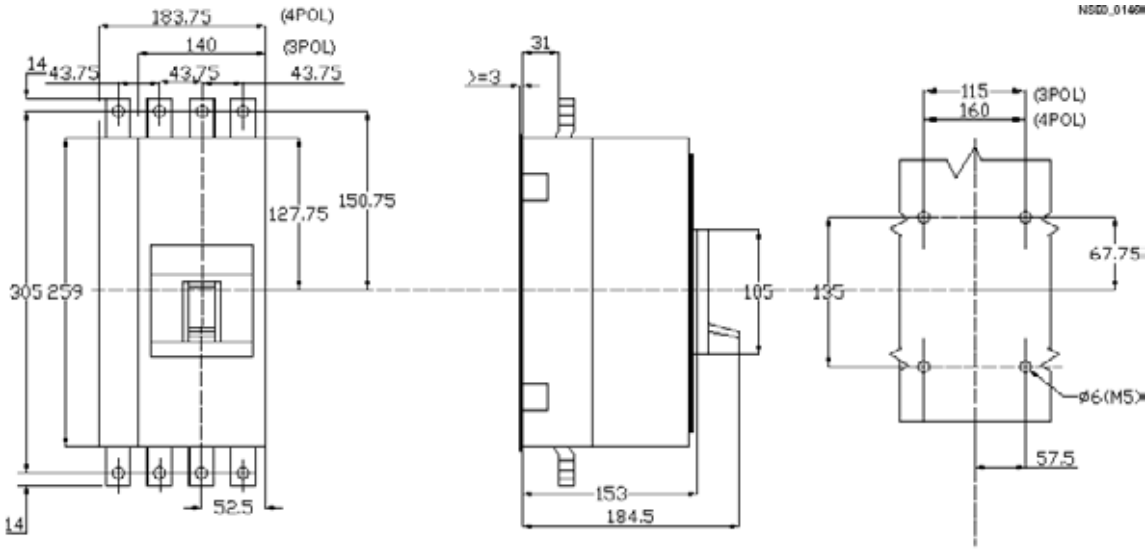

Rear terminals for screw connection
Thermal-magnetic and electronic overcurrent trip units

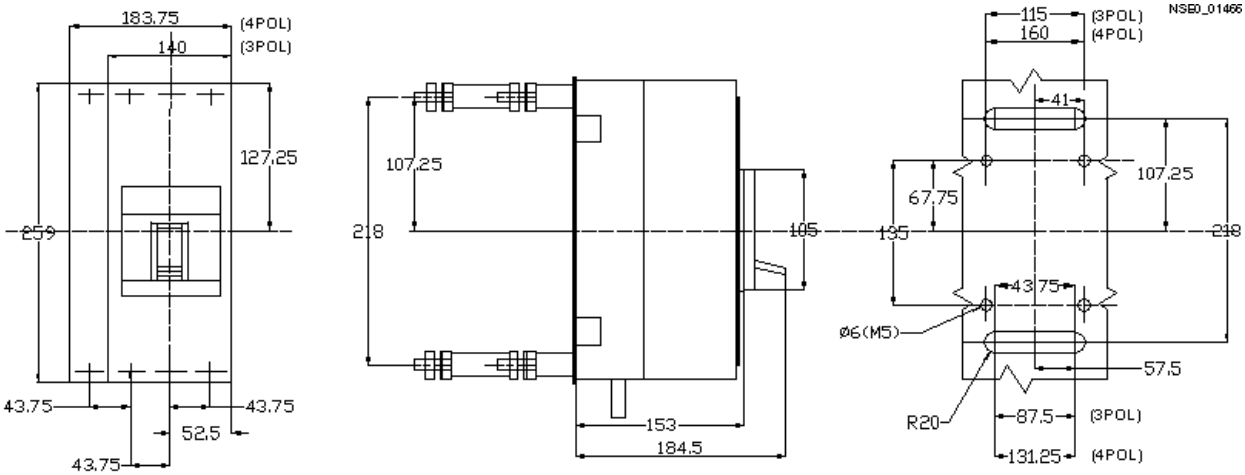

Withdrawable version VT400 standard switching capacity N and high switching capacity H

Front terminals
Thermal-magnetic and electronic overcurrent trip units

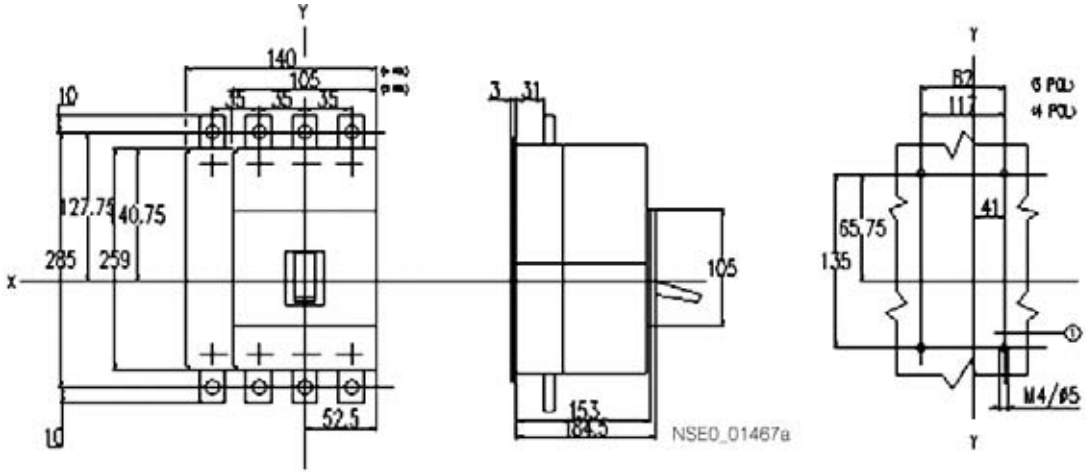

Rear terminals for screw connection
Thermal-magnetic and electronic overcurrent trip units

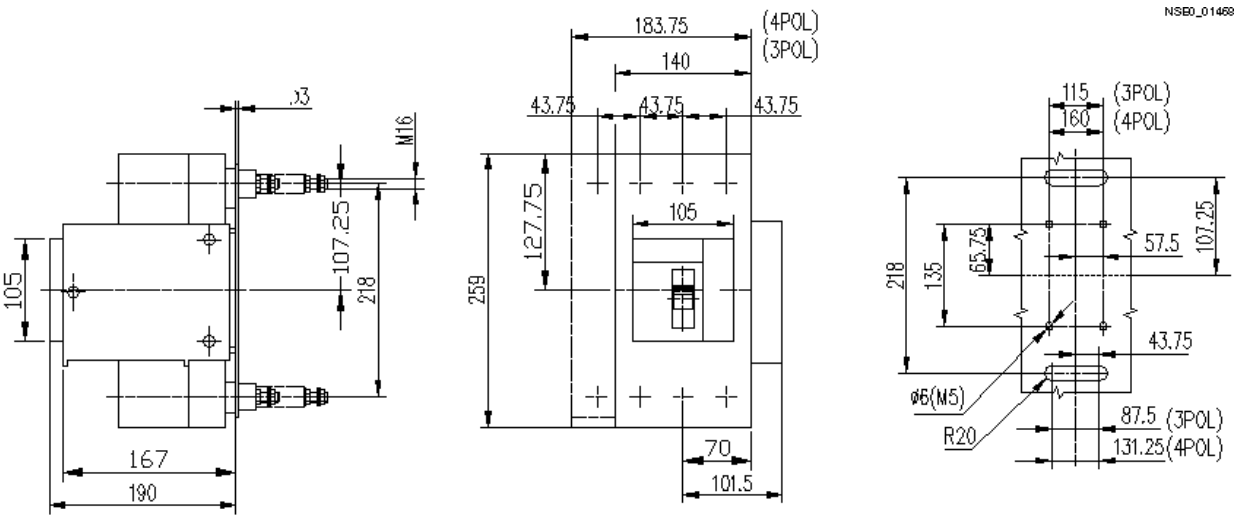

3

Project planning aids

Fixed-mounted version VT630 standard switching capacity N, high switching capacity H, and very high switching capacity L

Front terminals
Thermal-magnetic and electronic overcurrent trip units

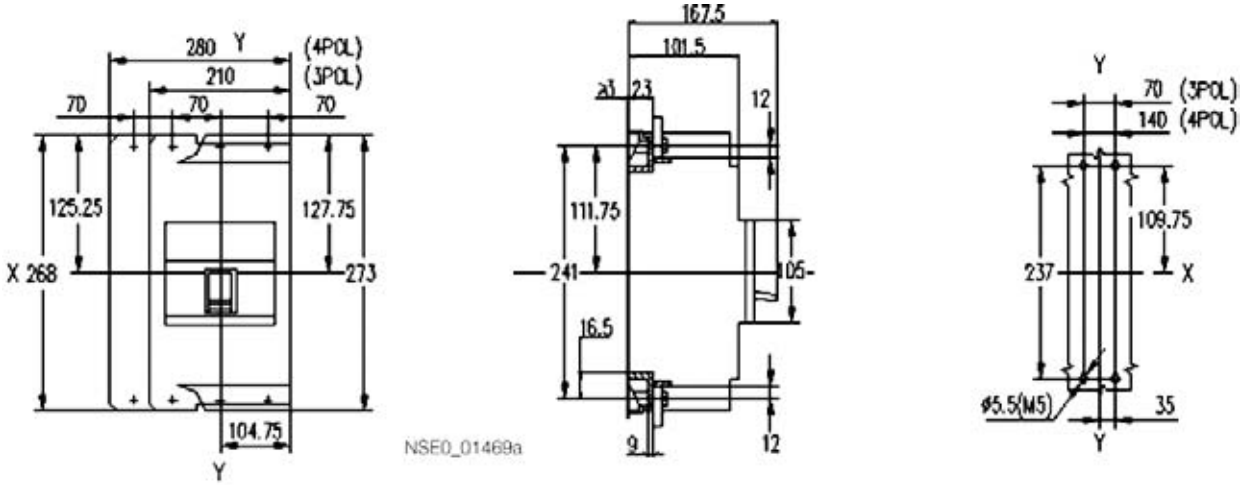

3

Rear terminals for screw connection
Thermal-magnetic and electronic overcurrent trip units

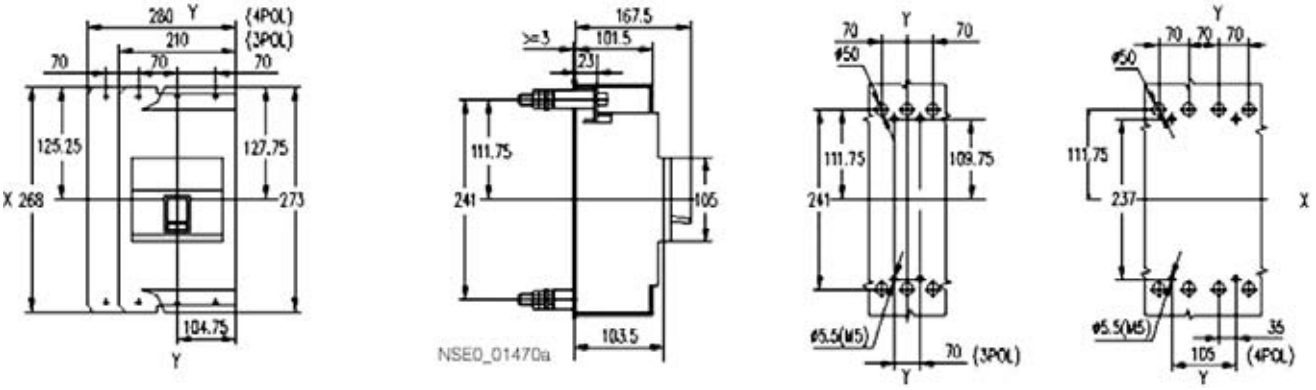

Extended front terminals
Thermal-magnetic and electronic overcurrent trip units

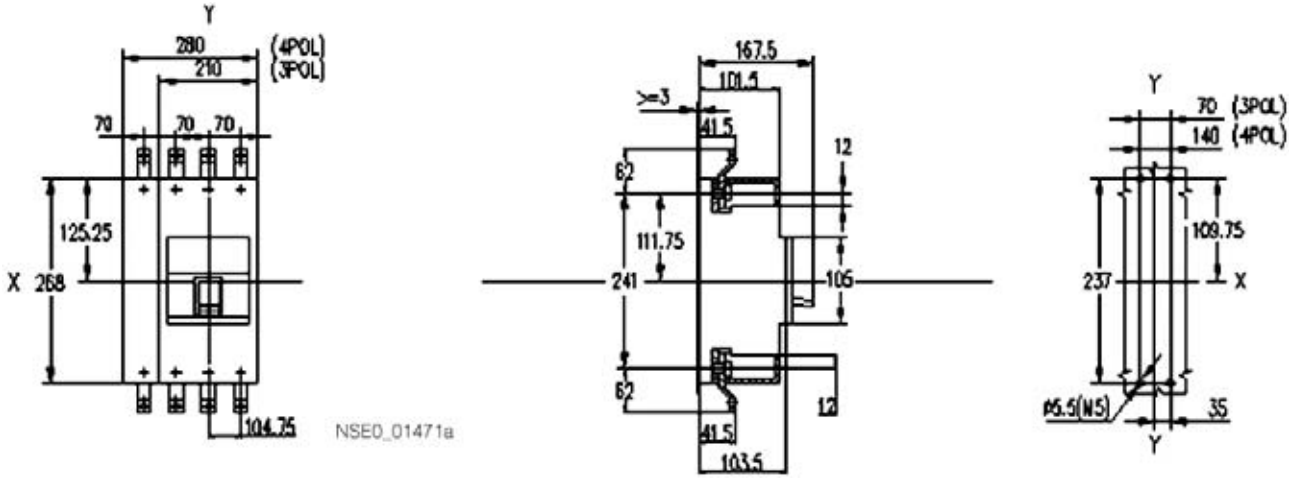

Withdrawable version VT630 standard switching capacity N, high switching capacity H, and very high switching capacity L

Front terminals
Thermal-magnetic and electronic overcurrent trip units

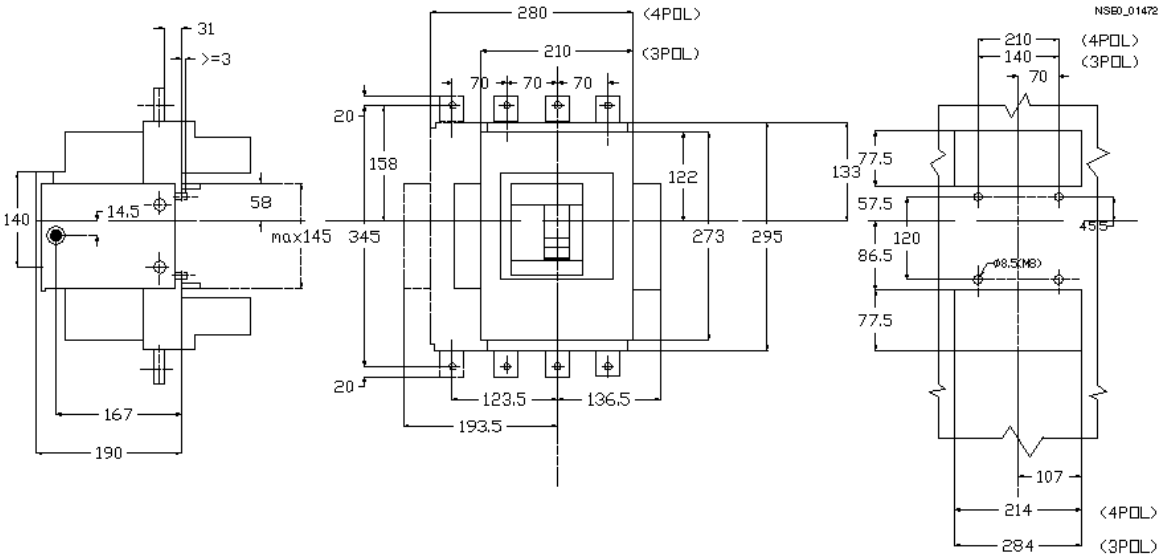

Rear terminals
Thermal-magnetic and electronic overcurrent trip units

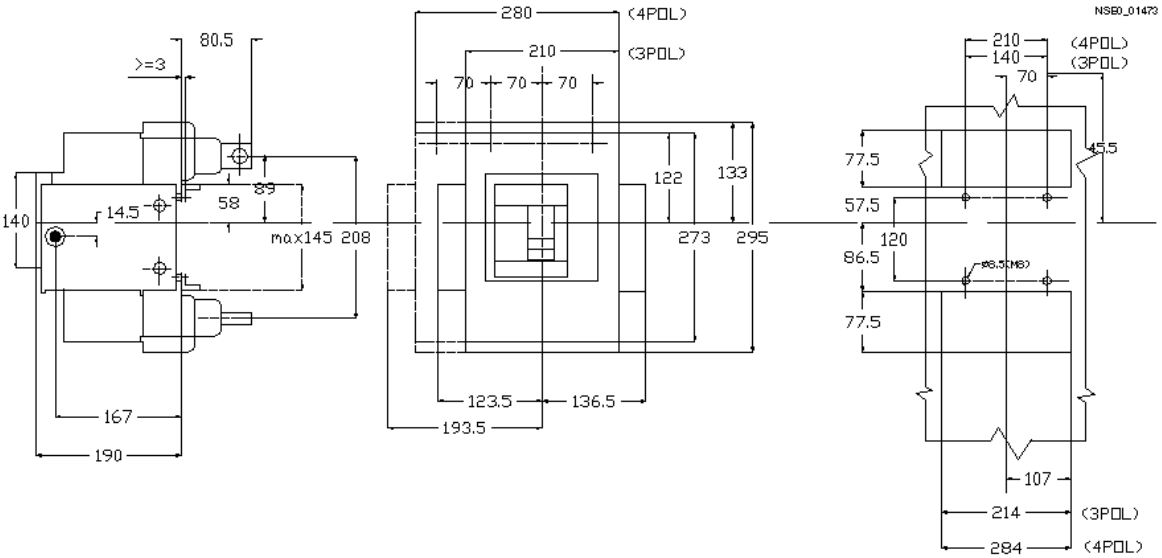

Project planning aids

Front terminals for VT250 to VT630

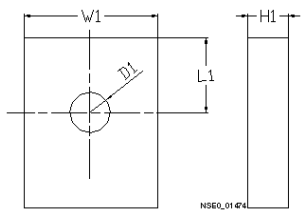

I_n	Fixed-mounted version – front terminals Extended front terminals				Plug-in version – front terminals				withdrawable version – front terminals			
	W1	L1	H1	D1	W1	L1	H1	D1	W1	L1	H1	D1
250 A	20	12.5	6	8.5	20	10	5	8.2	20	10	5	8.2
400 A	25	12.5	6	11	25	14	5	10.2	25	14	6	10.2
630 A	40	10	5	11	–	–	–	–	40	20	10	14

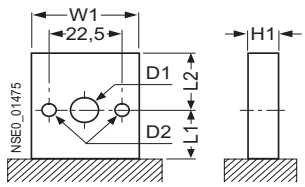

I_n	Fixed-mounted version – front terminals					
	W1	L1	L2	H1	D1	D2
630 A	40	12	12	10	11	6.5

3

Rear terminals – screw connection for VT63 to VT630

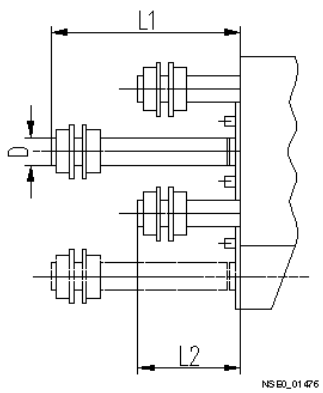

Top view of rear terminals for screw connection

I_n	Fixed-mounted version			Plug-in version, withdrawable version		
	L1	L2	D	L1	L2	D
63A	42	75	M8	40	76	M8
100A	42	75	M8	40	76	M8
160A	42	75	M8	40	76	M8
250A	55	100	M12	48	100	M12
400A	62	108	M16	58	108	M16
630A	68	68	M24×2	–	–	–

Fixed-mounted and plug-in circuit-breakers VT63 to VT630

Fixed-mounted/plug-in circuit-breakers with I_n = 63 A ... 630 A

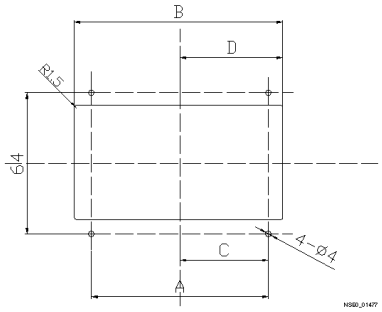

63 A ... 160 A

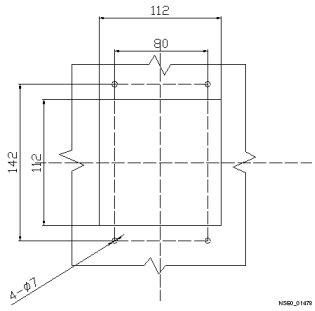

250 A, 400 A

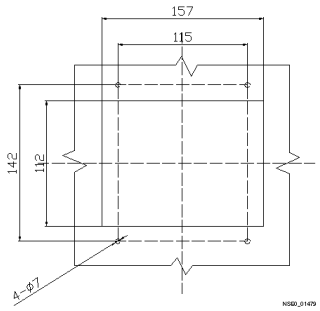

630 A

	Number of poles	A	B	C	D
63 A, 100 A	3	83.5	86	41.75	43
	4	108.5	111	42	43
160 A	3	95.5	98	41.75	49
	4	125.5	128	48	48

Withdrawable circuit-breakers VT400 to VT630

Withdrawable circuit-breakers with I_n = 63 A ... 1600 A

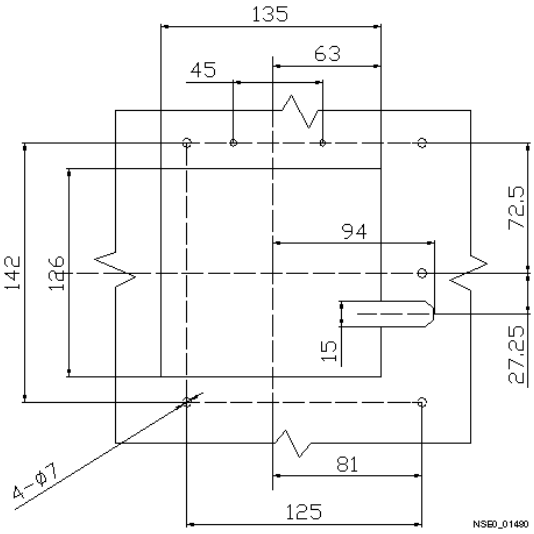

250 A, 400 A

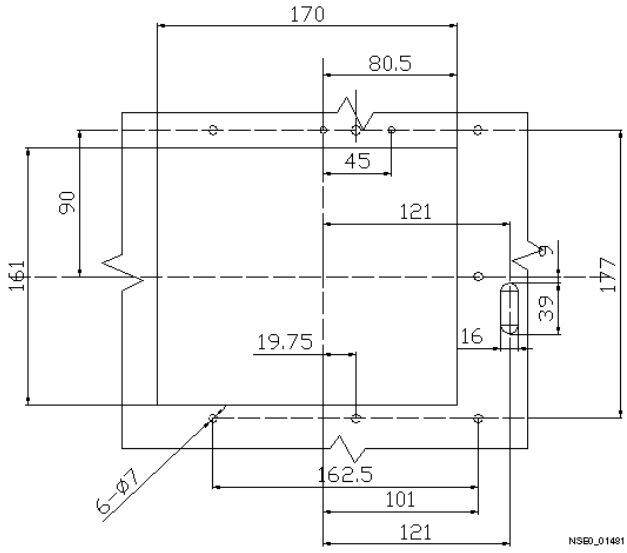

630 A

Project planning aids

Electrical accessories – Motorized operating mechanism for VT160

Electrical operating mechanism, available for circuit-breakers with I_n = 160 A

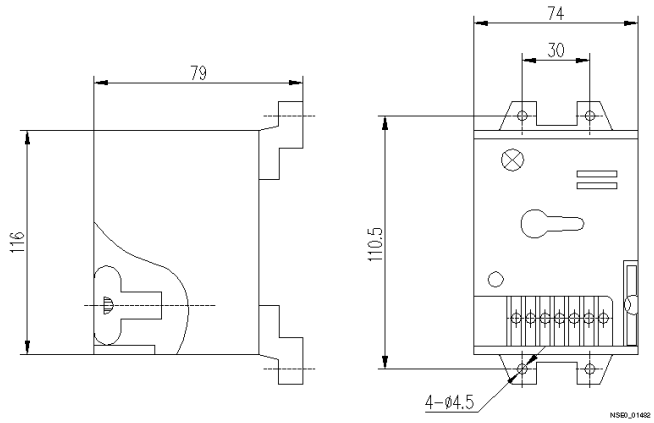

Motorized operating mechanism for VT250

Electrical operating mechanism, available for circuit-breakers with I_n = 250 A

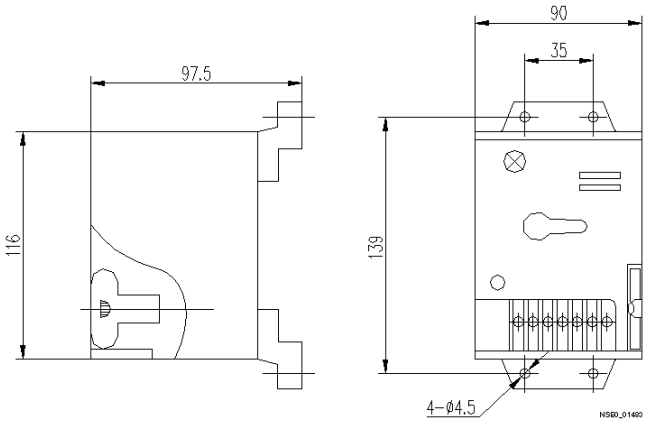

Motorized operating mechanism for VT400 and VT630

Electrical operating mechanism, available for circuit-breakers with I_n = 400 A and I_n = 630 A

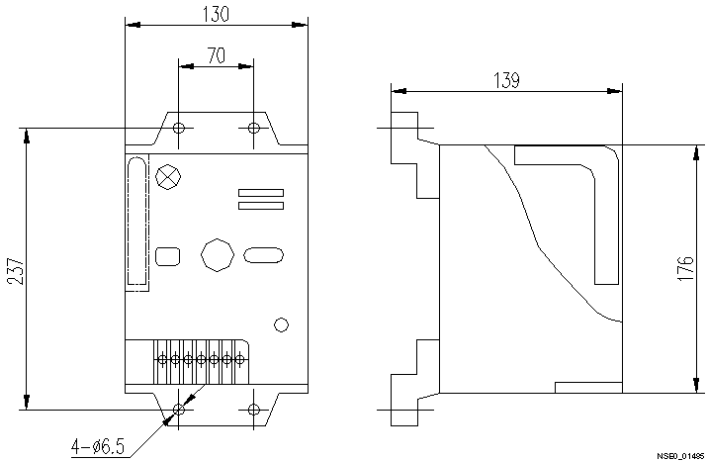

Mechanical accessories – Front-operated rotary operating mechanism for VT250 and VT400

Rotary operating mechanism on circuit-breakers with I_n = 250 A and I_n = 400 A

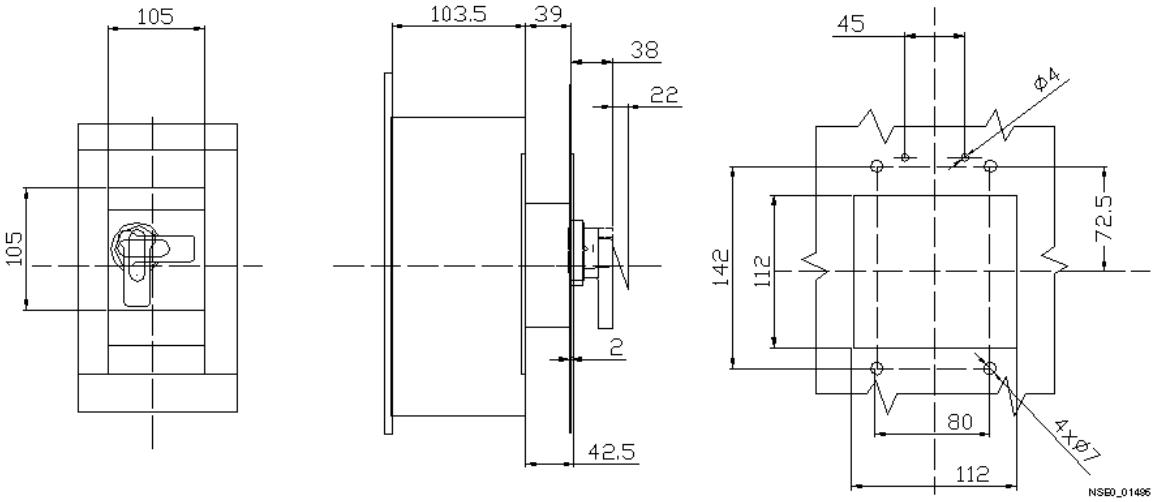

Front-operated rotary operating mechanism for VT630

Rotary operating mechanism on circuit-breakers with I_n = 630 A

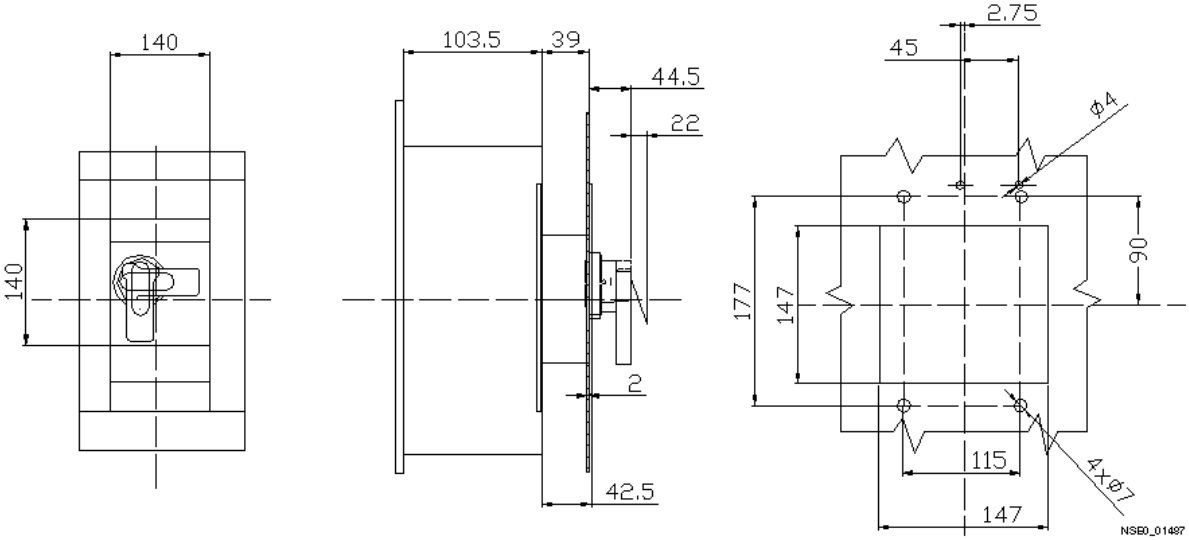

Project planning aids

Handle for door-coupling rotary mechanism for VT63 to VT630

Handle on the compartment door, suitable for circuit-breakers with I_n = 63 ... 630 A

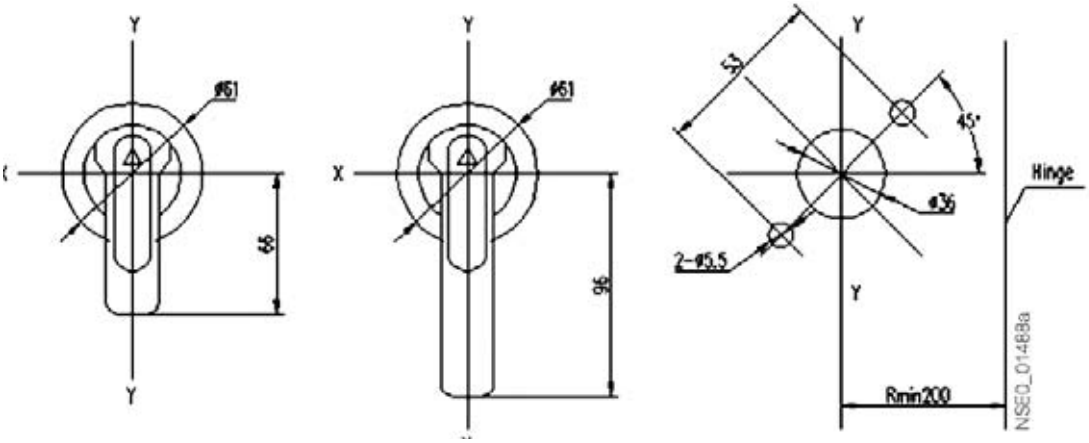

Door-coupling rotary mechanism for VT63 to VT160

Rotary operating mechanism (central type) on circuit-breakers with I_n = 63 A ... 160 A

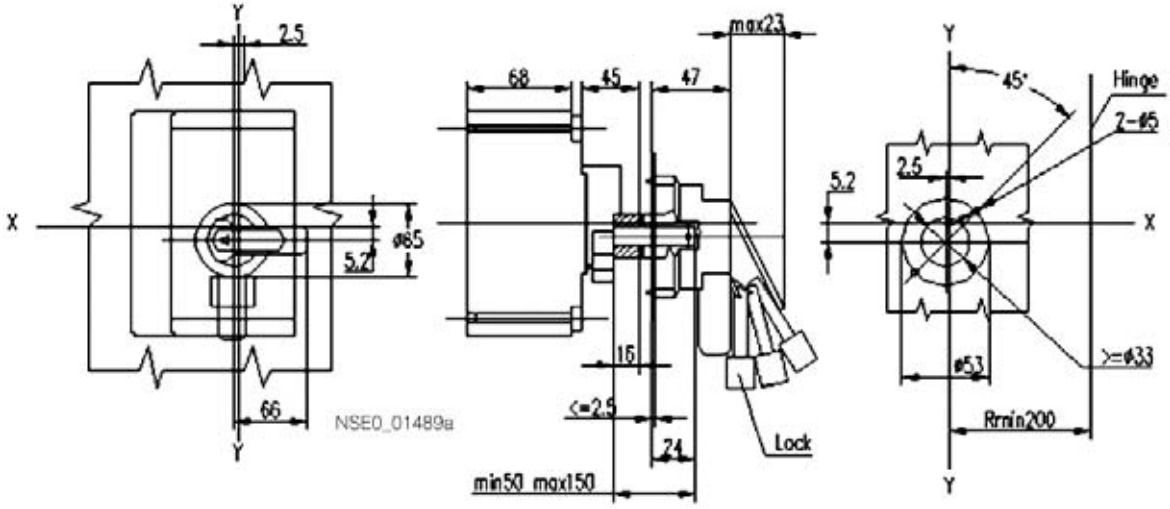

Door-coupling rotary mechanism for VT250 to VT400

Rotary operating mechanism (central type) on circuit-breakers with I_n = 250 A and I_n = 400 A

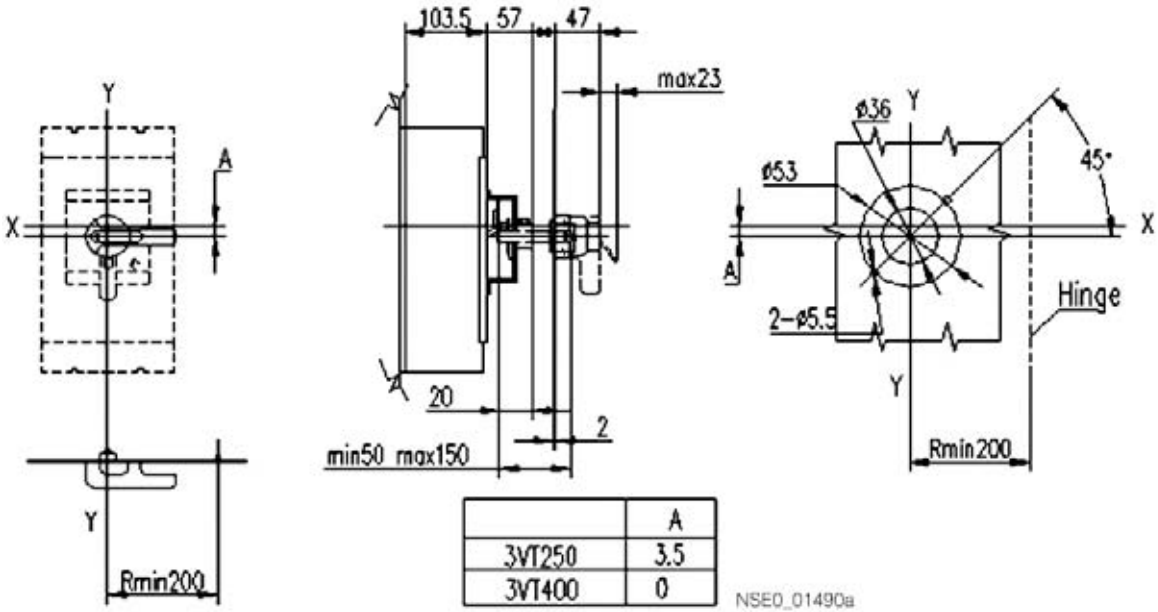

	A
3VT250	3.5
3VT400	0

Door-coupling rotary mechanism for VT630

Rotary operating mechanism (eccentric type) on circuit-breakers with I_n = 630 A

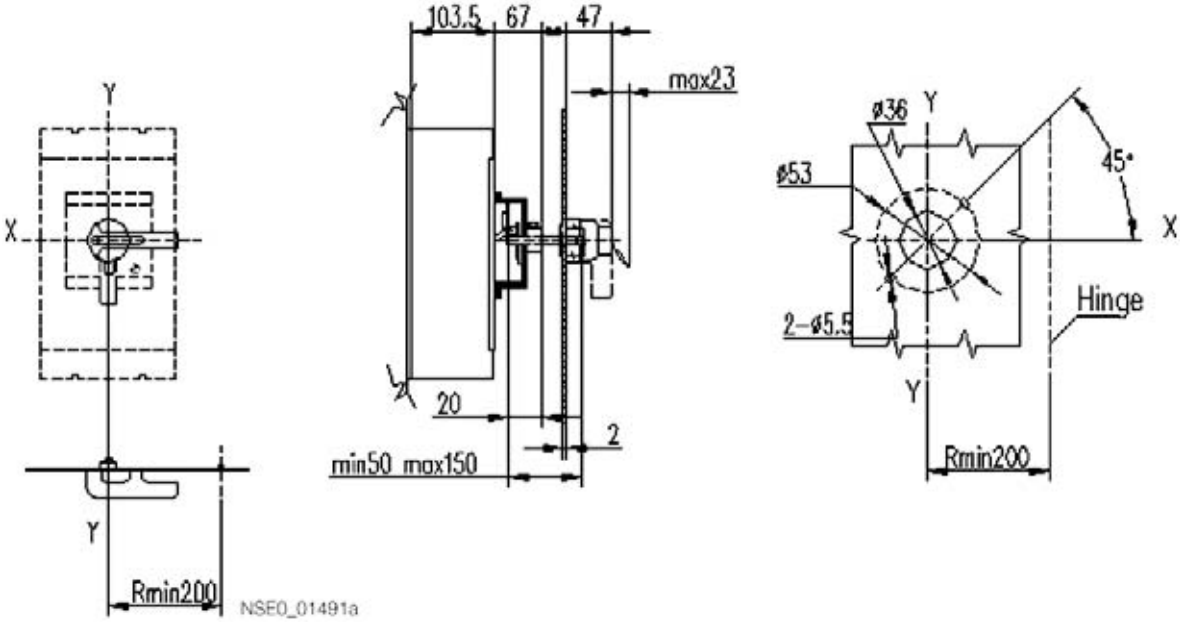

Project planning aids

Schematics

Motorized operating mechanism diagram for VT160 to VT630

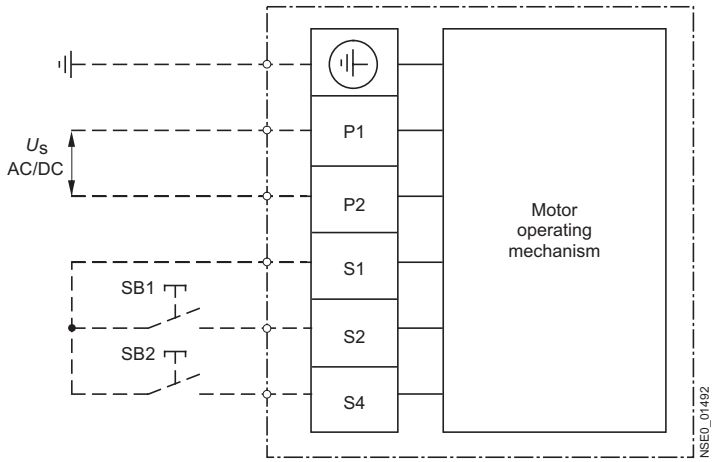

Notes:
SB1 – Closing push button: (ready by user)
SB2 – Opening push button: (ready by user)
U_s – Control power supply
P1, P2 – Terminal number
S1 ... S4 – Terminal number

3

Undervoltage release for VT63 to VT630

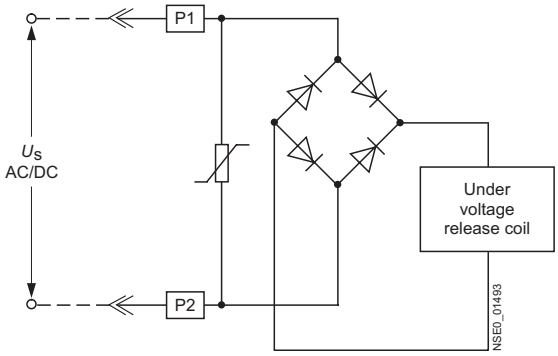

250 A to 630 A embedded undervoltage release

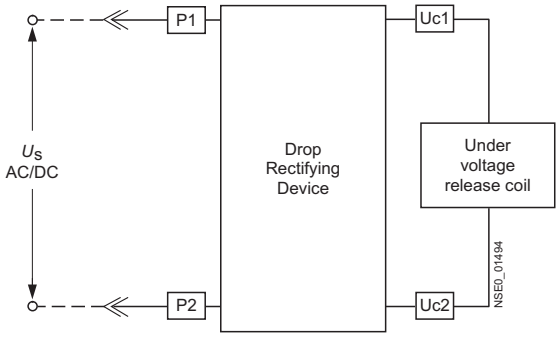

63 A to 160 A attached undervoltage release

Notes:
URV – Under voltage release
U_s – Control power
P1, P2 – Terminal number

Only broken lines are connected by user. Other wiring have been connected by factory, which offer user reference.

Shunt release for VT63 to VT630

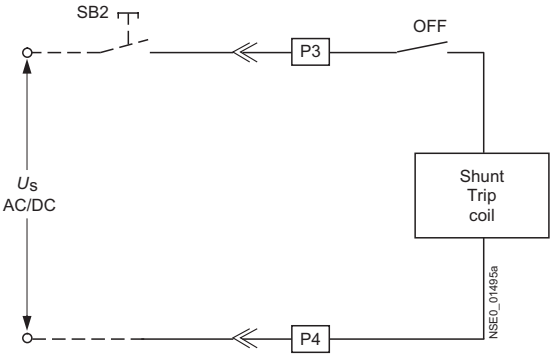

SB2 – Opening push button (ready by user)
P3, P4 – Terminal number
U_S – Control power
OFF – Auxiliary contact

Only broken lines are connected by user. Other wiring have been connected by factory, which offer user reference.

Alarm switches for VT63 to VT630

State of Circuit-Breaker	State of alarm contacts	Diagram of wiring
Closing position	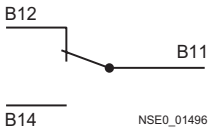	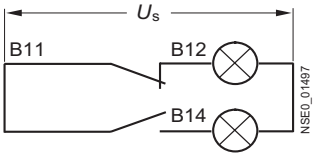
Opening position	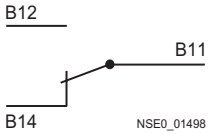	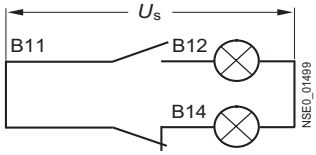

Position signaling switch for VT160 to VT630

Position of breaker main body	Position contact state	Main circuit state
Open position	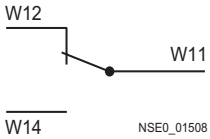	Open position
Close position	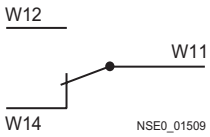	Close position

Project planning aids

Auxiliary switches for VT63 to VT630

State of Circuit-Breaker	State of alarm contacts	Diagram of wiring
Closing position	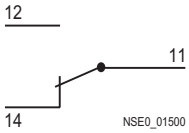 1 set of auxiliary switch, includes 2 sets of contacts; For I_n = 63 A . . . 630 A	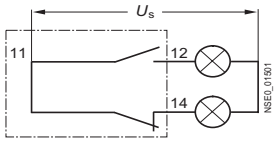
	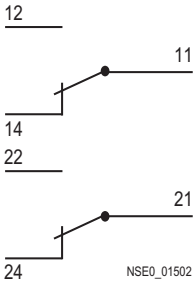 2 sets of auxiliary switches, includes 4 sets of contacts; For I_n = 630 A	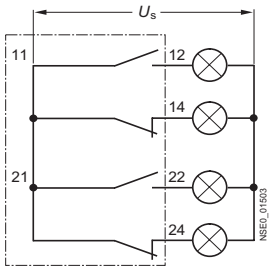
Opening position	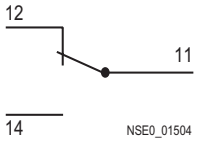 1 set of auxiliary switch, includes 2 sets of contacts; For I_n = 63 A . . . 630 A	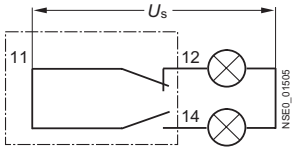
	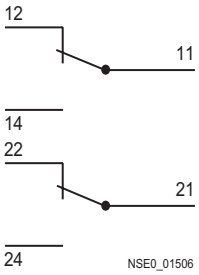 2 sets of auxiliary switches, includes 4 sets of contacts; For I_n = 630 A	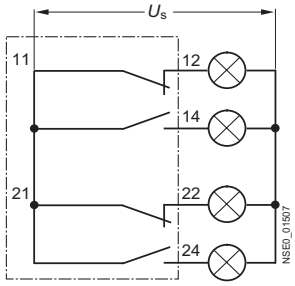

3

Appendix

4

4/2	Siemens contacts worldwide
4/3	Service & Support
4/4	Customer Support
4/5	Subject index
4/6	Order number index
4/7	Conditions of sale and delivery Export regulations

Siemens contacts worldwide

At

http://www.siemens.com/automation/partner

you can find details of Siemens contact partners worldwide responsible for particular technologies.

You can obtain in most cases a contact partner for

- Technical Support,
- Spare parts/repairs,
- Service,
- Training,
- Sales or
- Consultation/engineering.

You start by selecting a

- Country,
- Product or
- Sector.

By further specifying the remaining criteria you will find exactly the right contact partner with his/her respective expertise.

A&D in the WWW

A detailed knowledge of the range of products and services available is essential when planning and configuring automation systems. It goes without saying that this information must always be fully up-to-date.

The Siemens Automation and Drives Group (A&D) has therefore built up a comprehensive range of information in the World Wide Web, which offers quick and easy access to all data required.

Under the address

http://www.siemens.com/automation

you will find everything you need to know about products, systems and services.

Product Selection Using the Interactive Catalog

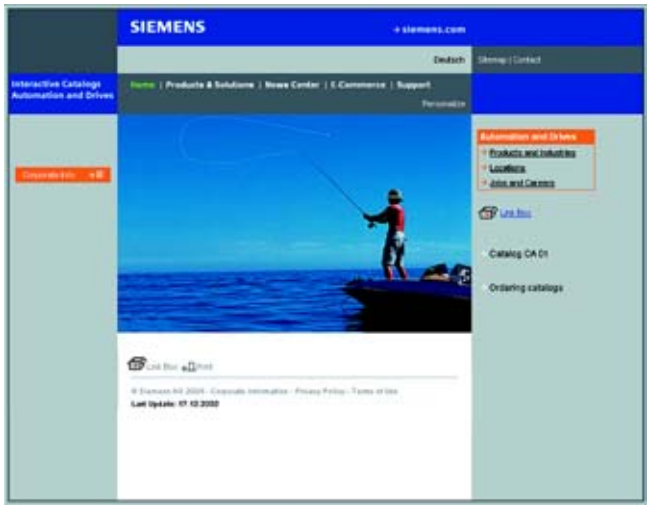

Detailed information together with convenient interactive functions:
The interactive catalog CA 01 covers more than 80,000 products and thus provides a full summary of the Siemens Automation and Drives product base.

Here you will find everything that you need to solve tasks in the fields of automation, switchgear, installation and drives.
All information is linked into a user interface which is easy to work with and intuitive.

After selecting the product of your choice you can order at the press of a button, by fax or by online link.

Information on the interactive catalog can be found in the Internet under

http://www.siemens.com/automation/ca01

or on CD-ROM:

- Automation & Drives CA 01,
  Order No.: E86060-D4001-A110-C3-7600

Easy Shopping with the A&D Mall

The A&D Mall is the virtual department store of Siemens AG in the Internet. Here you have access to a huge range of products presented in electronic catalogs in an informative and attractive way.

Data transfer via EDIFACT allows the whole procedure from selection through ordering to tracking of the order to be carried out online via the Internet.

Numerous functions are available to support you.

For example, powerful search functions make it easy to find the required products, which can be immediately checked for availability. Customer-specific discounts and preparation of quotes can be carried out online as well as order tracking and tracing.

Please visit the A&D Mall on the Internet under:

http://www.siemens.com/automation/mall

Customer Support

In the face of harsh competition you need optimum conditions to keep ahead all the time:
A strong starting position. A sophisticated strategy and team for the necessary support - in every phase.
Service & Support from Siemens provides this support with a complete range of different services for automation and drives.

In every phase: from planning and startup to maintenance and upgrading.

Our specialists know when and where to act to keep the productivity and cost-effectiveness of your system running in top form.

Online Support

The comprehensive information system available round the clock via Internet ranging from Product Support and Service & Support services to Support Tools in the Shop.

http://www.siemens.com/automation/service&support

Technical Consulting

Support in the planning and designing of your project from detailed actual-state analysis, target definition and consulting on product and system questions right to the creation of the automation solution. [2])

Expert technical assistance [1]) for low-voltage controlgear, switchgear and systems and electrical installation.

Tel.: +49 (9 11) 8 95-59 00
Fax: +49 (9 11) 8 95-59 07

E-Mail: technical-assistance @siemens.com

Configuration and Software Engineering

Support in configuring and developing with customer-oriented services from actual configuration to implementation of the automation project. [2])

Technical Support

Competent consulting in technical questions covering a wide range of customer-oriented services for all our products and systems.

Tel.: +49 (180) 50 50 222
Fax: +49 (180) 50 50 223
http://www.siemens.com/automation/support-request

Service On Site

With Service On Site we offer services for startup and maintenance, essential for ensuring system availability.

In Germany
Tel.: +49 (180) 50 50 444 [2])

Repairs and Spare Parts

In the operating phase of a machine or automation system we provide a comprehensive repair and spare parts service ensuring the highest degree of operating safety and reliability.

In Germany
Tel.: +49 (180) 50 50 446 [2])

Optimization and Upgrading

To enhance productivity and save costs in your project we offer high-quality services in optimization and upgrading. [1])

1) Contact:
Technical assistance for product selection · Old/new code coding · competitor code conversion· special variants · special requirements · sales promotion (Infoline).
Your regional contact for sales support (prices, discounts, delivery times).
Technical support for commissioning support and after-sales service.

2) For country-specific telephone numbers go to our Internet site at:
http://www.siemens.com/automation/service&support

Subject index

Page

5
5-digit operating cycles counter 2/23 ... 2/26, 2/28

A
Air circuit-breakers 2/16 ... 2/29
Alarm switches 3/39
ATSE controller 2/27
Auxiliary releases 2/21, 2/28, 3/39
Auxiliary supply connectors 2/29
Auxiliary switches
for circuit-breakers 2/21, 2/28, 3/39

B
Blocking device 2/22 ... 2/26, 2/29

C
Circuit-breakers
Fixed-mounted 2/17, 2/19, 2/20, 3/14 bis 3/18, 3/29 ...3/31
for motor protection 3/14 ... 3/28, 3/30, 3/31, 3/33, 3/35 ... 3/38
for system protection 3/14 ... 3/38
Operat. mechanisms for 2/21, 3/40
Plug-in version 3/19 ... 3/24, 3/32 ...3/35
with electronic overcurrent trip units 3/18, 3/21, 3/24, 3/26, 3/28, 3/31, 3/33, 3/35, 3/36, 3/28
with electronic trip unit 2/16 ... 2/19
Withdrawable 2/16, 2/18, 2/20, 3/25 ...3/28, 3/36 ... 3/38
without electronic trip unit 2/20
with thermal-magnetic overcurrent trip units 3/14 ... 3/17, 3/19 ... 3/25, 3/27, 3/29, 3/30, 3/32 ... 3/37
Connecting bars 2/29, 3/40
Conversion set 2/29
Crank handle 2/29
Current transformers 2/27

Page

D
Door-coupling rotary mechansim
for circuit-breakers 3/40
Door sealing frame 2/22 ... 2/26

E
Electrical closing 2/28

F
Fixed-mounted circuit-breakers 2/17, 2/19, 2/20, 3/14 bis 3/18, 3/29 ...3/31
Front-operated rotary operating mechanism 3/40
Function tester 2/27

G
Guide frames for circuit-breakers 2/27

I
Interlock 3/40

L
Locking device 2/22 ... 2/26, 2/28

M
Manual operating mechanism 2/21
Molded-case circuit-breakers 3/14 ... 3/41
Motor protection
Circuit-breakers for 3/14 ... 3/28, 3/30, 3/31, 3/33, 3/35 ... 3/38
Motorized operating mechanism 2/21, 2/28, 3/40
Mutual mechanical interlock 2/22 ... 2/26, 2/28

N
Non-automatic circuit-breakers 2/20

O
Operating mechanisms
for circuit-breakers 2/21, 3/40
Overcurrent trip units 3/14 ... 3/38

Page

P
Phase barriers 3/41
Plug-in
Circuit-breakers 3/19 ... 3/24, 3/32 ...3/35
Position indicator switch 2/29

S
Sealing cap 2/22 ... 2/26
Shunt release 2/21, 3/39
Shutter 2/22 ... 2/24, 2/29
System protection
Circuit-breakers for 3/14 ... 3/38

T
Transformers 2/27
Terminal covers 3/41
Terminals 3/41

U
Undervoltage releases
for circuit-breakers 2/21, 3/39

W
Withdrawable circuit-breakers 2/16, 2/18, 2/20, 3/25 ...3/28, 3/36 ... 3/38

Order number index

Order No.	Page
3	
3VT80	3/14, 3/29
3VT81	3/14, 3/29
3VT82	3/15, 3/19, 3/22, 3/29, 3/32, 3/34
3VT83	3/16, 3/18, 3/20, 3/21, 3/23, 3/24, 3/30, 3/33, 3/35
3VT84	3/17, 3/18, 3/21, 3/24, 3/25 ...3/28, 3/30, 3/31, 3/33, 3/35 ... 3/38
3VT85	3/17, 3/18, 3/25 ... 3/28, 3/30, 3/31, 3/36 ... 3/38
3VT9 100	3/40, 3/41
3VT9 200	3/40, 3/41
3VT9 300	3/40, 3/41
3VT9 400	3/40, 3/41
3VT9 500	3/40, 3/41

Order No.	Page
3WT80	2/16 ... 2/19
3WT81	2/16 ... 2/20
3WT82	2/16 ... 2/20
3WT83	2/16 ... 2/20
3WT98 16	2/28
3WT98 21	2/29
3WT98 23	2/29
3WT98 25	2/29
3WT98 27	2/29
3WT98 31	2/28
3WT98 32	2/28
3WT98 33	2/28
3WT98 43	2/27
3WT98 47	2/27
3WT98 51	2/28
3WT98 53	2/28
3WT98 54	2/28

Order No.	Page
3WT98 63	2/28
3WT98 64	2/28
3WT98 66	2/28
3WT98 67	2/29
3WT98 83	2/27
3WT98 84	2/28, 2/29
3WT98 86	2/27
3WT98 88	2/29

Terms and Conditions of Sale and Delivery

By using this catalog you can acquire hardware and software products described therein from the Siemens AG subject to the following terms. Please note! The scope, the quality and the conditions for supplies and services, including software products, by any Siemens entity having a registered office outside of Germany, shall be subject exclusively to the General Terms and Conditions of the respective Siemens entity.

For customers with a seat or registered office in the Federal Republic of Germany

The „General Terms of Payment“ as well as the „General Conditions for the Supply of Products and Services of the Electrical and Electronics Industry“ shall apply.

For software products, the „General License Conditions for Software Products for Automation and Drives for Customers with a Seat or registered Office in Germany“ shall apply.

For customers with a seat or registered office outside of Germany

The „General Terms of Payment“ as well as the „General Conditions for Supplies of Siemens, Automation and Drives for Customers with a Seat or registered Office outside of Germany“ shall apply.

For software products, the „General License Conditions for Software Products for Automation and Drives for Customers with a Seat or registered Office outside of Germany“ shall apply.

General

The prices are in € (Euro) ex works, exclusive packaging.

The sales tax (value added tax) is not included in the prices. It shall be debited separately at the respective rate according to the applicable legal regulations.

In addition to the prices of products which include silver, plump, aluminum and/or copper, surcharges may be calculated if the respective limits of the notes are exceeded. The respective note (e.g. source: German newspaper „Handesblatt“ in category „deutsche Edelmetalle“ and „Metallverarbeiter“) for silver („verarbeitetes Silber“), plump („Blei in Kabeln“), aluminum („Aluminium in Kabeln“) and copper („Elektrolytkupfer“, „DEL-Notiz“) respectively, of the day the order or rather the on call order is received, is decisive for the calculation of the surcharges.

Surcharges of copper shall be calculated for Drives at a note („DEL-Notiz“) above EUR 225,00 / 100 Kg and for chokes / transformers above EUR 150,00 / 100 kg.

Surcharges shall be charged based on the quantities of the materials which are contained in the relevant products.

Prices are subject to change without prior notice. We will debit the prices valid at the time of delivery.

The dimensions are in mm. Illustrations are not binding.

Insofar as there are no remarks on the corresponding pages, - especially with regard to data, dimensions and weights given - these are subject to change without prior notice.

Comprehensive Terms and Conditions of Sale and Delivery are available free of charge from your local Siemens business office under the following Order Nos.:

- 6ZB5310-0KR30-0BA0
  (for customers based in the Federal Republic of Germany)
- 6ZB5310-0KS53-0BA0
  (for customers based outside of the Federal Republic of Germany)

or download them from the Internet:
http://www.siemens.com/automation/mall
(Germany: A&D Mall Online-Help System)

Export regulations

The products listed in this catalog / price list may be subject to European / German and/or US export regulations.

Therefore, any export requiring a license is subject to approval by the competent authorities.

According to current provisions, the following export regulations must be observed with respect to the products featured in this catalog / price list:

AL	Number of the German Export List. Products marked other than “N“ require an export license. In the case of software products, the export designations of the relevant data medium must also be generally adhered to. Goods labeled with an “AL not equal to N“ are subject to a European or German export authorization when being exported out of the EU.
ECCN	Export Control Classification Number. Products marked other than “N“ are subject to a reexport license to specific countries. In the case of software products, the export designations of the relevant data medium must also be generally adhered to. Goods labeled with an “ECCN not equal to N“ are subject to a US re-export authorization.

Even without a label or with an “AL: N“ or “ECCN: N“, authorization may be required due to the final destination and purpose for which the goods are to be used.

The deciding factors are the AL or ECCN export authorization indicated on order confirmations, delivery notes and invoices.

Errors excepted and subject to change without prior notice.

A&D/VuL/En 17.03.05

Notes

Siemens AG
Automation & Drives
Low-Voltage Controls and Distribution

Postfach 48 48
90327 NÜRNBERG
GERMANY

Order No:
E86060-K1835-A101-A1-7600
KG K 0705 5.0 E 128 En/503125
Printed in Germany

Catalogs of the
Automation and Drives Group (A&D)

Further information can be obtained from our branch offices listed in the appendix or at www.siemens.com/automation/partner

Automation and Drives	*Catalog*
Interactive catalog on CD-ROM	
• The Offline Mall of Automation and Drives	CA 01

Automation Systems for Machine Tools	
SINUMERIK & SIMODRIVE	NC 60

Drive Systems	
Variable-Speed Drives	
SINAMICS G130 Drive Converter Chassis Units, SINAMICS G150 Drive Converter Cabinet Units	D 11
SINAMICS G110 Inverter Chassis Units	D 11.1
SINAMICS S120 Servo Control Drive System	D 21.2
SINAMICS S150 Drive Converter Cabinet Units	D 21.3
DC Motors	DA 12
SIMOREG DC MASTER 6RA70 Digital Chassis Converters	DA 21.1
SIMOREG K 6RA22 Analog Chassis Converters	DA 21.2
SIMOREG DC MASTER 6RM70 Digital Converter Cabinet Units	DA 22
SIMOVERT PM Modular Converter Systems	DA 45
SIEMOSYN Motors	DA 48
MICROMASTER 410/420/430/440 Inverters	DA 51.2
MICROMASTER 411/COMBIMASTER 411	DA 51.3
SIMOVERT MV Medium-Voltage Drives	DA 63
SIMOVERT MASTERDRIVES Vector Control	DA 65.10
SIMOVERT MASTERDRIVES Motion Control	DA 65.11
Synchronous and asynchronous servomotors for SIMOVERT MASTERDRIVES	DA 65.3
SIMODRIVE 611 universal and POSMO	DA 65.4
Low-Voltage Three-Phase-Motors	
Squirrel-Cage Motors, Totally Enclosed, Fan-Cooled	M 11
Automation Systems for Machine Tools SIMODRIVE	NC 60
• Main Spindle Motors	
• Feed Motors	
• Converter Systems SIMODRIVE 611/POSMO	
Drive and Control Components for Hoisting Equipment	HE 1

Electrical Installation Technology	
ALPHA Small Distribution Boards and Distribution Boards	ET A1
PDF: ALPHA 8HP Molded-Plastic Distribution System	*ET A3*
ALPHA FIX Terminal Blocks	ET A5
BETA Modular Installation Devices	ET B1
DELTA Switches and Outlets	ET D1
GAMMA Building Management Systems	ET G1

Factory Automation Sensors	FS 10

Human Machine Interface Systems SIMATIC HMI	ST 80

Industrial Communication for Automation and Drives	IK PI

Low-Voltage Controls and Distribution	*Catalog*
SIRIUS, SENTRON, SIVACON	LV 1
SIDAC reactors and filters	LV 60
SIVACON 8PS Busbar trunking systems CD, BD01, BD2 up to 1250 A	LV 70
Low-Voltage Controlgear, Switchgear and Systems	LV 90

Motion Control System SIMOTION	PM 10

Process Instrumentation and Analytics	
Field Instruments for Process Automation Measuring Instruments for Pressure, Differential Pressure, Flow, Level and Temperature, Positioners and Liquid Meters	FI 01
PDF: Indicators for panel mounting	*MP 12*
SIREC Recorders and Accessories	MP 20
SIPART, Controllers and Software	MP 31
SIWAREX Weighing Systems	WT 01
Continuous Weighing and Process Protection	WT 02
Gas Analysis Equipment for the Process Industry	PA 10
PDF: Process Analytics, Components for the System Integration	*PA 11*
SIPAN Liquid Analysis	PA 20

SIMATIC Industrial Automation Systems	
SIMATIC PCS Process Control System	ST 45
PDF: SIMATIC S5/505 Automation Systems	*ST 50*
Products for Totally Integrated Automation and Micro Automation	ST 70
SIMATIC PCS 7 Process Control System	ST PCS 7
PDF: Add-ons for the SIMATIC PCS 7 Process Control System	*ST PCS 7.A*
pc-based Automation	ST PC
SIMATIC Control Systems	ST DA

SIPOS Electric Actuators	
Electric Rotary, Linear and Part-turn Actuators	MP 35
Electric Rotary Actuators for Nuclear Plants	MP 35.1/.2

Systems Engineering	
Power supplies SITOP power	KT 10.1
System cabling SIMATIC TOP connect	KT 10.2

System Solutions

Applications and Products for Industry are part of the interactive catalog CA 01

TELEPERM M Process Control System	
PDF: AS 488/TM automation systems	*PLT 112*

PDF: These catalogs are only available as pdf files.

The information provided in this catalog contains descriptions or characteristics of performance which in case of actual use do not always apply as described or which may change as a result of further development of the products. An obligation to provide the respective characteristics shall only exist if expressly agreed in the terms of contract. Availability and technical specifications are subject to change without notice.

Token fee 2,00 €

Siemens AG

Automation and Drives
Low-Voltage Controls and Distribution
Postfach 4848
90327 NÜRNBERG
GERMANY

www.siemens.com/lowvoltage

Order No. E86060-K1835-A101-A1-7600

SIEMENS

Circuit-Breakers from 10 A to 3200 A

Catalog LV 35 • 2006