WavePro™ Low Voltage Power Circuit Breakers

Application Guide

The Ultimate Assurance In Uptime And Reliability

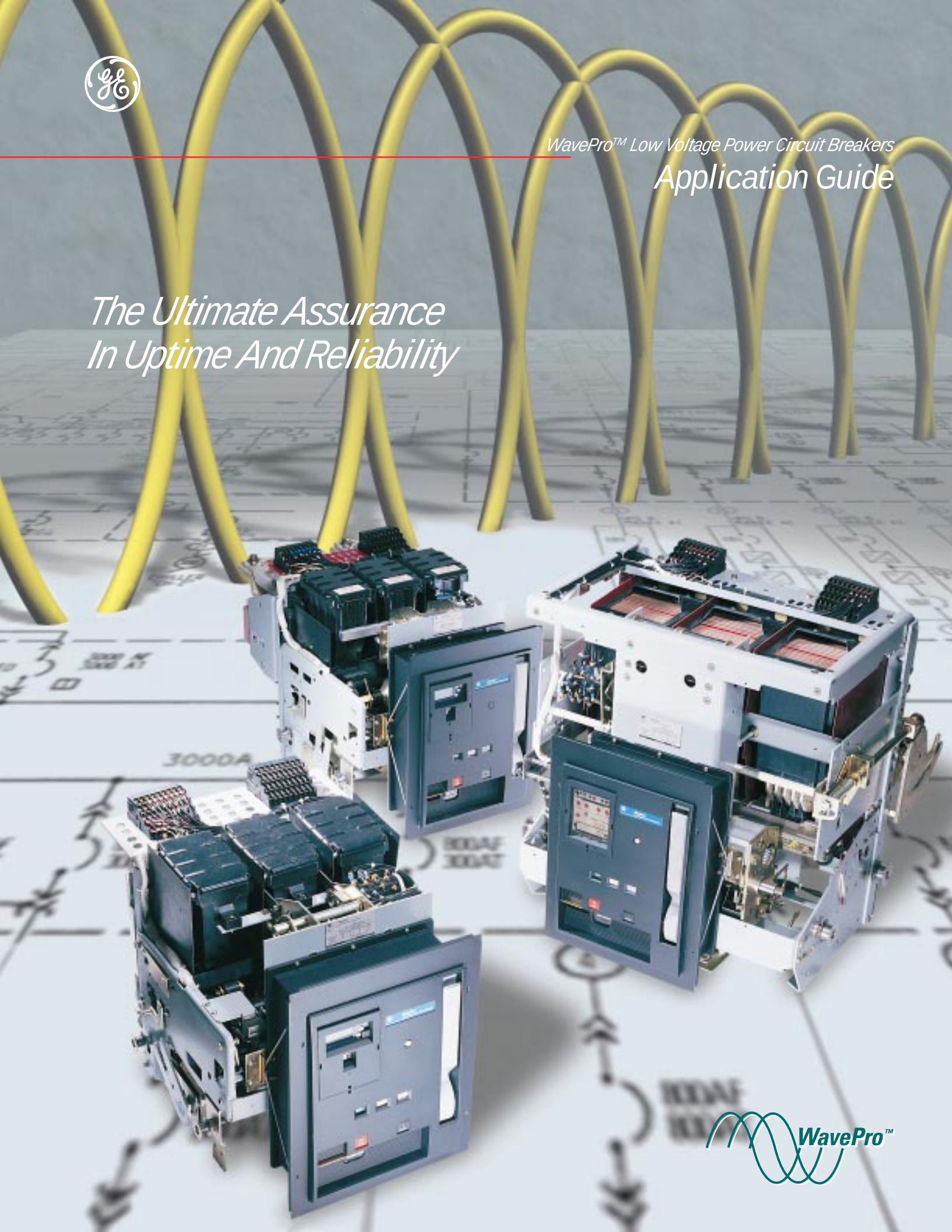

WavePro™

Table Of Contents

Key Features 2
Basic Configurations & Ratings 3
Features & Characteristics 4
Operation 6
Accessories for Drawout Breakers 7
Trip Units — Power+™ 12
Trip Characteristics — Power+™ 14
Trip Units — MicroVersaTrip Plus™ and PM™ 17
Trip Units — MicroVersaTrip Plus™ 18
Trip Characteristics — MicroVersaTrip Plus™ and PM™ 19
Trip Characteristics — Power+, MicroVersaTrip Plus™ and PM™ 21
Trip Units — MicroVersaTrip PM™ 23
MicroVersaTrip PM™ Metering and Relaying 24
Trip Unit and Rating Plug Catalog Numbers 27
WavePro™ Breaker Catalog Number Guide 28
WavePro™ Breaker Wiring Diagram 30
Breaker Weights and Fuse Ratings 32
Time Current Curves 34
Standards & Testing 36
Guideform Specifications 38

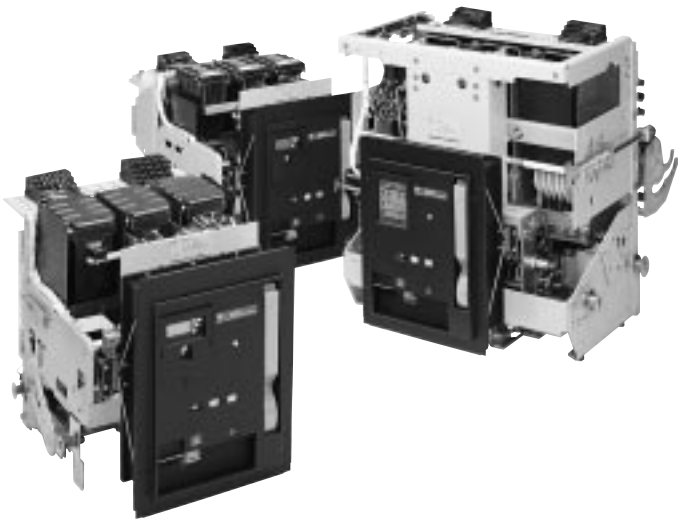

WavePro circuit breakers are the newest generation of GE low voltage power circuit breakers. WavePro builds on the experience of the AKR breaker line to bring new convenience and safety features while retaining the robustness of GE's long-standing power circuit breaker products. WavePro breakers are ANSI designed and carry the UL and CSA labels. They are designed to withstand short circuit stresses equal to their short time interrupting ratings. This means that maximum selectivity with downstream devices can be attained because instantaneous trips are not required to achieve the breaker's short circuit rating. This attests to the ruggedness of the WavePro design and places it ahead of insulated case breakers and other maker's power circuit breakers in many critical applications. WavePro breakers can be applied on power systems from 208 to 600 volts and have current ratings of 800 through 5000 amperes. Short circuit interrupting ratings for WavePro breakers range from 30kA to 200kA rms symmetrical.

Why Specify Low Voltage Power Circuit Breakers?

All circuit breakers perform the function of basic circuit protection. What separates low voltage power circuit breakers (LVPCB) from insulated case (ICCB) and molded case (MCCB) circuit breakers are features and ratings that make the equipment application safer to operate, easier to maintain, and maximize equipment uptime. Some of the key differences are:

	LVPCB	ICCB/MCCB
Maximum ambient operating temperature	*40°C equipment ambient* (55°C breaker ambient)	25°C equipment ambient (40°C breaker ambient)
Nominal/Maximum operating voltage	240/*254v* 480/*508v* 600/*635v*	240/240v 480/480v 600/600v
Short circuit testing	*30 cycles* @ 15% PF (Instantaneous trips *not required* for interrupting rating)	3 cycles @ 20% PF
Switchgear/Switchboard mounting	Drawout (closed door)	Drawout (not closed door) or Stationary

Greater Convenience And Operational Safety

General Electric pioneered the closed door drawout design for low voltage power circuit breakers with the AK line of breakers. WavePro retains that safety feature and adds more features. Control, status and circuit information are all available on the front of the breaker with the breaker compartment door closed. All breakers have a flush-mounted handle for charging the closing springs. Operation of the breaker can be accomplished through manual OPEN/CLOSE buttons on the escutcheon. The escutcheon also includes indicators for closing spring status, main contact status, and breaker drawout position. Trip units are mounted behind a sealable cover for easy viewing of the display and access to the rating plug test receptacle. When equipped with a bell alarm, the target/reset button is also mounted in the escutcheon. The charging handle and the close and open push buttons are double insulated from live components to provide additional operator safety. A standard padlock device allows you to install up to three padlocks to prevent accidental or unauthorized closing of the breaker.

Field Installable Accessories

WavePro breakers feature standardized wiring to dedicated secondary disconnect points for all accessories. This allows you to easily add accessories to the breaker should it become necessary after the breaker is installed. Field installable accessories include auxiliary switch, shunt trip, undervoltage device, electrical lockout device, bell alarm with or without lockout, "hidden-on" button, remote close accessory, remote charge indicator and operations counter. Trip units can be upgraded easily and the breakers can be made "power management ready" so that stepping up to the top-of-the-line MicroVersaTrip PM trip unit is as easy as replacing the trip unit — no additional modifications to the breaker are required.

Three Choices Of Advanced, Solid-State Trip Units

For basic functionality, the new Power+™ trip unit gives you straightforward means of providing overload and short circuit protection on a WavePro circuit breaker. Tripping characteristics are easily adjusted by simple-to-use rotary switches. The trip unit is upgradeable to ground fault by simply inserting a ground fault rating plug. An optional target module allows for target monitoring and also functions as a trip unit health indicator. Enhanced MicroVersaTrip Plus™ and MicroVersaTrip PM™ trip units give you two ways to monitor and control the WavePro breaker with unprecedented ease. A simple keypad lets you program and display a variety of functions including tripping characteristics, remote communications, status information and protective relaying, and allows integration with GE POWER LEADER™ Power Management Systems. The trip unit display also allows viewing of many standard metering parameters as well as pickup alarms, trip target indications and fault status information.

1. Padlock provision on the breaker escutcheon to lock the breaker in the open and trip-free position
2. Optional operations counter (field installable)
3. Trip unit visible through the breaker escutcheon — metering and trip information accessible without opening the cubicle door
4. Choice of three trip units — Power+™, MicroVersaTrip Plus™ or MicroVersaTrip PM™
5. Power Management Ready — breaker can be pre-wired for power management trip unit (MVT-PM) — upgrading is as simple as changing the trip unit
6. Flush mounted manual charging handle provided on both manually operated and electrically operated breakers
7. Field-installable accessories — shunt trip, bell alarm (shown), auxiliary switch, undervoltage device, electrical lockout device, “hidden-on” (limited access) button, secondary disconnect(s) and remote close accessory
8. Sealable door over the trip unit — trip settings can be viewed but not changed
9. Easy access to key breaker operating information — drawout position indicator, breaker contact status, closing spring status all visible from the front of the breaker
10. Manual close button (“limited access” option on electrically operated breakers)
11. Dedicated secondary disconnect points — up to 72 connection points available to accommodate all breaker accessories, including power management and neutral sensor (see breaker wiring diagram on pages 30 and 31)
12. Expanded auxiliary switch option — 4 stage or 7 stage with all contacts wired out
13. “One-shot” electronic close circuit (not shown)
14. Breaker rating nameplate with 15 digit catalog number. Catalog number completely describes breaker ratings, trip unit type and characteristics, breaker operation and control voltages, and all accessories with associated ratings.

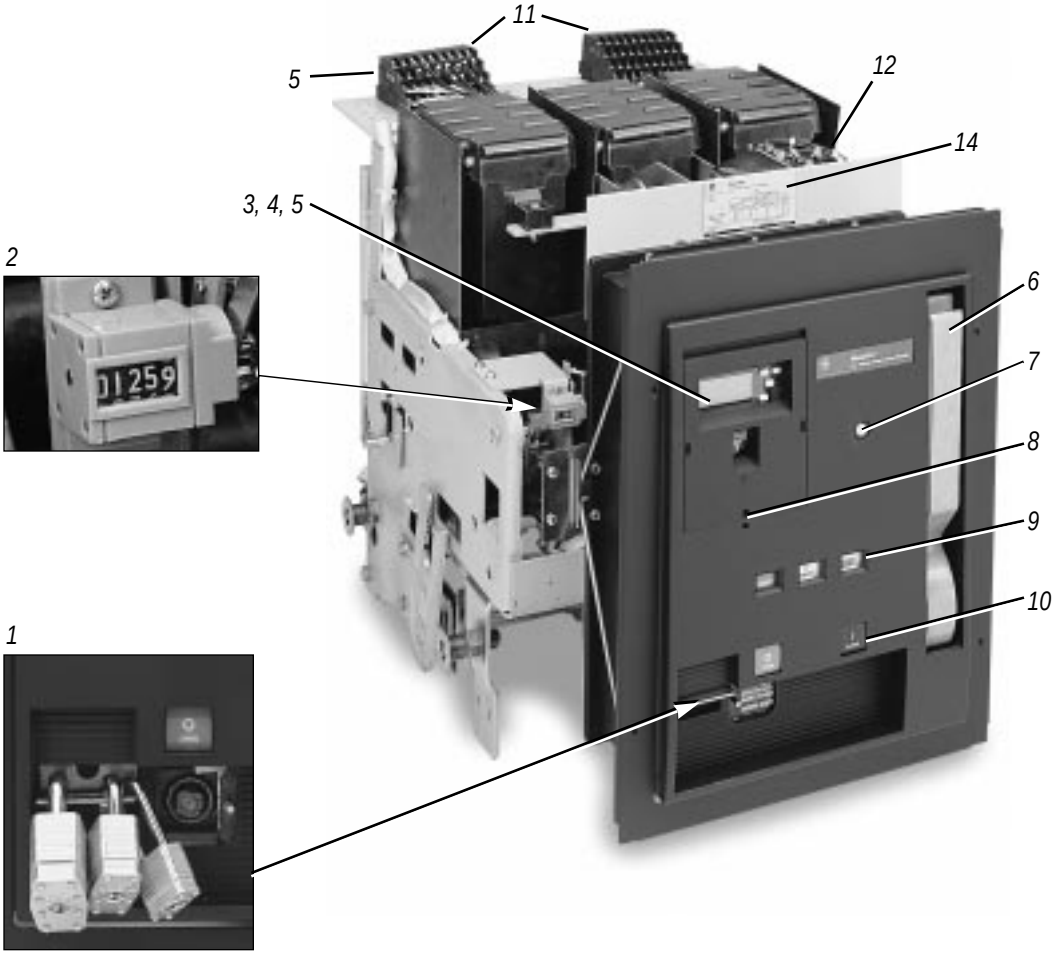

Basic Configurations

WavePro™ low voltage power circuit breakers are available in various levels of interrupting capacity (IC) and are identified with a suffix in the model number. WPS indicates "standard IC", WPH indicates "high IC", WPX indicates "extended IC" and WPF indicates "integrally fused".

High IC and extended IC breakers are used with larger kVA substation transformers as well as in parallelling applications. Fused circuit breakers take the IC rating to 200kA rms symmetrical for the highest short circuit applications.

Refer to Table 3.1 for the interrupting capacity (IC) of WavePro breakers at system operating voltages.

Refer to Table 32.2 for available fuse ratings.

Table 3.1 WavePro Breaker Interrupting Ratings

Rated AC Voltage, Nominal (max)	Breaker Type	Frame Size (amps)	Short-Circuit RMS Symmetrical kA		
			Short-Time Withstand	With Instantaneous Trip	Without Instantaneous Trip
600 (635)	WPS-08	800	30	30	30
	WPH-08	800	42	42	42
	WPX-08	800	50	50	50
	WPS-16	1600	42	42	42
	WPH-16	1600	65	65	65
	WPS-20	2000	65	65	65
	WPS-32	3200	65	65	65
	WPH-32	3200	85	85	85
	WPS-40	4000	85	85	85
	WPS-50	5000	85	85	85
480 (508)	WPS-08	800	30	30	30
	WPH-08	800	42	42	42
	WPX-08	800	65	65	65
	WPS-16	1600	50	50	50
	WPH-16	1600	65	65	65
	WPS-20	2000	65	65	65
	WPS-32	3200	65	65	65
	WPH-32	3200	85	85	85
	WPS-40	4000	85	85	85
	WPS-50	5000	85	85	85
240 (254)	WPS-08	800	30	42	30
	WPH-08	800	42	50	42
	WPX-08	800	65	65	65
	WPS-16	1600	50	65	50
	WPH-16	1600	65	65	65
	WPS-20	2000	65	65	65
	WPS-32	3200	65	85	65
	WPH-32	3200	85	130	85
	WPS-40	4000	85	130	85
	WPS-50	5000	85	130	85

WavePro 800-2000A Frame

WPS — Standard IC
WPH — High IC
WPX — Extended IC
WPF — Integrally fused (200kA IC)

WavePro 3200-4000A Frame

Drawout Construction

All WavePro breakers are furnished in drawout construction. They may be used in type WPxxxSUBxxx substructures or mounted in type AKD-10 low voltage switchgear and PBII/AV3 ACCESS low voltage switchboards. The OEM substructure uses many of the same components as the AKD-10 breaker cubicles and hence share many of the convenience and safety features inherent in drawout breaker construction. Drawout construction permits activation of a new feeder, rapid circuit breaker replacement, and/or inspection and maintenance of a breaker without the inconvenience of de-energizing the entire switchgear lineup.

Features (see photos, following page)

1. Interlocks: Standard interlocks include: (A) a drawout interlock which prevents the breaker from being closed unless it is in the TEST or CONNECT position, (B) a contact interlock which prevents moving the drawout breaker unless the main contacts are open — access to the drawout mechanism racking screw is prevented when the breaker is closed, (C, not shown) a spring discharge interlock that automatically discharges the closing springs when the breaker is moved from the TEST to the DISCONNECT position — this prevents withdrawing a breaker from the cubicle with the closing springs charged.

2. Secondary disconnects: Up to 72 secondary disconnect points are available on all breakers. Control circuits and accessories have dedicated points on the disconnects which allows standardized wiring to the breaker and the ability to add accessories at a later date without modifying the breaker or cubicle wiring. Breaker mounted secondary disconnects engage mating disconnects in the breaker cubicle when the breaker is in the TEST or CONNECT positions only.

3. Breaker Status Indicators: A breaker contact status indicator shows the position of the main contacts OPEN or CLOSED. The status of the closing springs is indicated as CHARGED or DISCHARGED. The drawout position indicator displays whether the breaker is in the CONNECT, TEST or DISCONNECT position. The breaker also includes a switch that provides main contact status indication to the POWER LEADER™ Power Management System.

4. Rejection feature: A built-in rejection feature prevents insertion of a breaker into an incorrect cubicle or substructure. This prevents either: insertion of a breaker with a lower interrupting capability (IC) into a high IC cubicle or substructure, or insertion of a higher ampere rated breaker into a lower ampere rated cubicle or substructure, or both. Within a given frame size, a higher IC breaker will be allowed into a lower IC cubicle or substructure (ex. a WPX-08 breaker would be able to rack into a WPH-08 or WPS-08 cubicle or substructure). Fused breakers are rejected from all other cubicles or substructures.

5. Padlocking devices: (A) Supplied on all breakers, the padlocking device allows up to three padlocks — $\frac{1}{4}$" to $\frac{3}{8}$" diameter shank — to be installed to keep the breaker mechanically trip-free. (B) A drawout padlock provision on the side of all breakers permits locking the breaker in either the TEST or DISCONNECT position with up to three padlocks. (C) Furthermore, the rails in the substructure and breaker cubicle will accept up to three padlocks to prevent insertion of a breaker into an empty cubicle.

6. Key Interlock: Optional provisions for a key interlock are located on the left side of the substructure or cubicle. Key interlocks are used to supervise the closing of a circuit breaker or the operation of upstream or downstream devices. Typical applications include interlocking main and tie breakers to prevent paralleling and interlocking secondary main breakers with primary air switches. Up to two key positions can be accommodated on each cubicle or substructure.

7. Drawout mechanism: A front accessible racking shaft is used to move the breaker through the various drawout positions. The racking shaft is located in the escutcheon on WP-08, WP-16 and WP-20 breakers. It is located on the right side of WP-32, WP-40 and WP-50 breakers and is accessed through a covered opening in the cubicle door.

8. Substructure: The substructure is a self-contained framework serving as a stationary receptacle for the WavePro drawout breaker. The substructure is designed for convenient mounting, with holes provided for bolting on a shelf or supports. Holes are also provided in the primary stabs for bolting to bus bars or terminal lugs. The substructure has retractable rails which aid in the installation of the drawout breaker.

9. Wheels and guide bar: Allows the drawout circuit breaker to ride on the cubicle or substructure's retractable rails for easy, precise removal and installation.

10. Shutters: Shutters are available as an optional accessory to protect personnel from inadvertently touching the primary stabs of an energized cubicle or substructure when the drawout breaker unit is removed.

11. Position Switch: (By-pass switch or TOC truck-operated-contact) This accessory is available with either two NO and two NC or six NO and six NC electrically separate contacts. The switch changes state when the breaker is racked from the CONNECT to the TEST position. The position switch is used to indicate the drawout position of the breaker, enable/disable control circuits, and/or bypass auxiliary contacts when the breaker is in the TEST/DISCONNECT/WITHDRAWN positions.

12. Lifting tool: Lifting tools are provided with each line-up of drawout switchgear and are available as accessories for substructures, and should be used to assist in safe handling of the drawout breaker. The lifting tool for 800-2000A frame breakers features 3 point lifting for easier installation of fused and unfused breakers. Separate lifting tools are used for 3200-4000A breakers and for 5000A breakers.

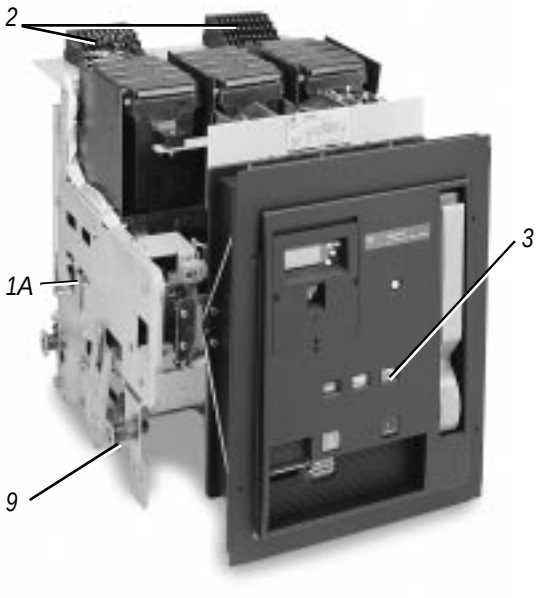
2
3
1A
9

1B
7
5A

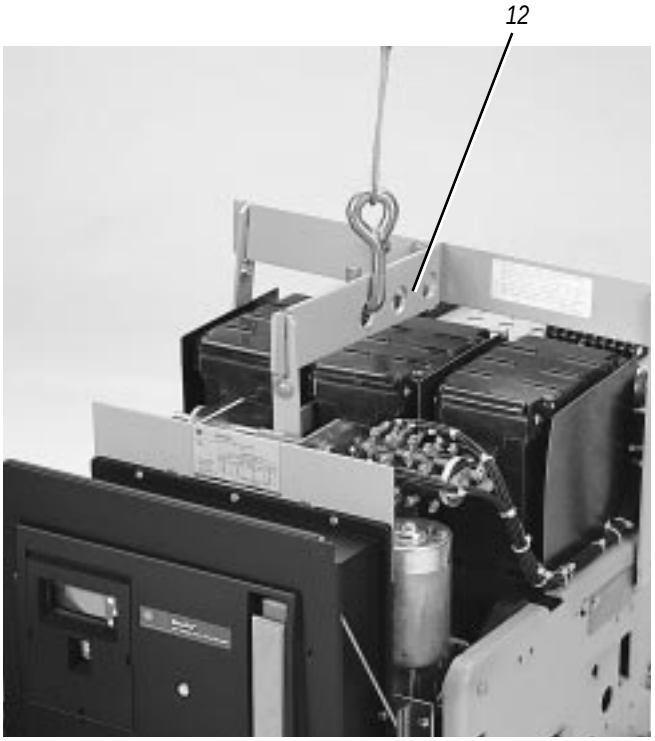
12

6

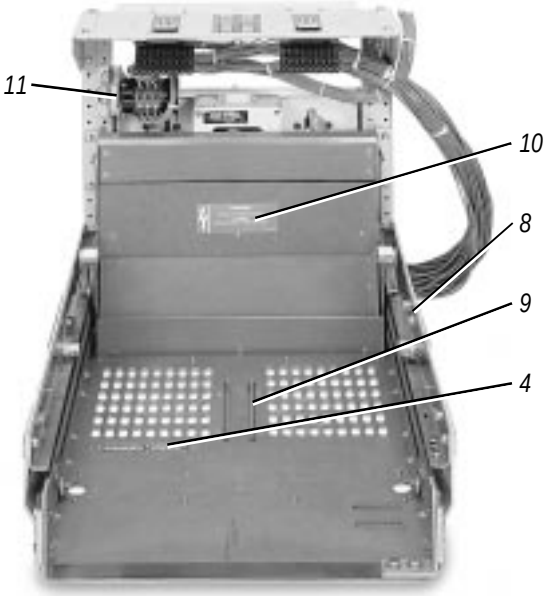
11
10
8
9
4

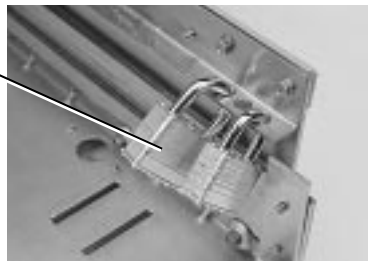
5C

Description of Operation

Manually operated — All manually operated breakers are charged via the pump handle in the escutcheon. Operating the charging handle several times fully charges the closing springs. A flag in the escutcheon will indicate the springs are CHARGED and the charging handle will free-wheel. The breaker is now ready to be closed by pressing the CLOSE button in the escutcheon. All breakers have a charge-after-close feature that allows the closing springs to be recharged after closing. This permits a charge/close/recharge/trip/close/trip sequence of operation. The breaker opening springs are automatically charged when the breaker is closed. The breaker may be opened by pressing the OPEN button.

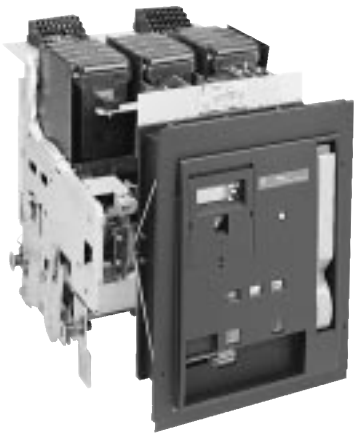

Electrically operated — All electrically operated breakers are provided with a spring charging motor, manual charging handle, electronic closing circuit with anti-pump feature and a shunt trip. Upon application of control power to the breaker (secondary disconnect A8 & A17), the closing springs will charge. Power to the spring charging motor is removed automatically by a cutoff switch when the springs are fully charged and the breaker is ready to operate. Closing can be accomplished by pressing the manual CLOSE button in the escutcheon (if so equipped) or by applying voltage to the closing circuit (secondary disconnect A9 & A18). The closing springs will automatically recharge after the breaker is closed. The spring charging circuit is wired separately from the closing circuit so that a separate source can be used for spring charging as well as providing the ability to block automatic recharging of the springs if required by the breaker application. The anti-pump feature in the closing circuit provides one closing operation of the breaker for each application of a close signal — a maintained close signal on the breaker will produce only one close operation and the close signal must be removed and reapplied to reclose the breaker. Mechanical interlocks prevent closing the breaker with partially charged springs and also prevent the closing springs from discharging if an attempt is made to close a beaker which is already closed.

Electrically operated breakers are provided with a manual CLOSE button in the escutcheon. If local manual closing is not required, the breaker can be equipped with a "HIDDEN ON" feature that replaces the CLOSE button with a limited access cover — a 0.100" rod is required to manually close the breaker. The manual charging handle built into the escutcheon can be used to charge the closing springs in the event control power is not available or is interrupted during the spring charging cycle. Opening of the circuit breaker is accomplished by pressing the OPEN button or by energizing the shunt trip coil.

Sequence of operation

OPEN/CLOSED Indicator	Main Breaker Contacts	Charge Indicator	Condition of Charging Springs	Next Permissible Operating Function
OPEN	Open	DISCHARGED	Discharged	Mechanism may be charged
OPEN	Open	CHARGED	Fully Charged	Breaker may be closed
CLOSED	Closed	DISCHARGED	Discharged	Mechanism may be recharged or Breaker may be opened
CLOSED	Closed	CHARGED	Fully Charged	Breaker may be opened
OPEN	Open	CHARGED	Fully Charged	Breaker may be closed or mechanism may be discharged without closing contacts by holding the OPEN button depressed while pushing CLOSE button

Auxiliary Switch (Field installable kit available)

The auxiliary switch is used for indication of breaker main contact position. It is available on manually and electrically operated breakers in either a 4-stage or 7-stage configuration. The 4-stage switch yields 3NO and 3NC contacts while the 7-stage switch yields 6NO and 6NC contacts. Normally open (NO) contacts follow the breaker primary contact position while normally closed (NC) contacts operate opposite the breaker primary contacts. All auxiliary switch contacts feature rugged double-break construction. Refer to breaker wiring diagram 10057403P1 for contact configurations and secondary disconnect terminations. Ratings of the auxiliary switch contacts are shown in Table 7.1.

Table 7.1 Auxiliary switch ratings and contact operation

Auxiliary Switch Ratings ①			
Control Voltage		Rating (Amperes)	
		Non-inductive	Inductive
DC	24	15	10
	125	10	5
	250	5	5
AC - 60Hz	120	15	15
	240	10	10

① 20A continuous rating of switch limited to 15A continuous rating of #16AWG wire on drawout breakers

Table 7.2

Auxiliary switch contact operation		
Breaker primary contacts	"a"-contact (NO)	"b"-contact (NC)
Open or tripped	Open	Closed
Closed	Closed	Open

Table 7.3

Field installable auxiliary switch kit catalog numbers			
Auxiliary switch	WP-08 / 16 / 20	WP-32 / 40	WP-50
Four stage	WPAUXSF4STG	WPAUXLF4STG	WPAUXXF4STG
Seven stage	WPAUXSF7STG	WPAUXLF7STG	WPAUXXF7STG

Bell Alarm with/without Lockout (Field installable kit available)

The bell alarm device is provided with two C-form contacts — each C-form contact is 1NO and 1NC contact with a common connection. The bell alarm device operates whenever the breaker trips due to a protective function of the trip unit. It can be used to provide remote indication of a fault trip and/or disable electrical operation of breakers that may have automatic control.

For Power+™ and MicroVersaTrip Plus™ trip units, the bell alarm will operate for overload, short circuit and ground fault trips. For MicroVersaTrip PM™ trip units, the bell alarm will operate for the same overcurrent trips plus any of the protective relay trips that are enabled in the trip unit. Tripping via the manual trip button, shunt trip, undervoltage device or open fuse lockout will not operate the bell alarm.

The bell alarm can be furnished with a mechanical lockout feature that will prevent the breaker from being manually closed until the lockout is reset. Reset of the contacts and lockout feature is accomplished by pushing the yellow "reset" button on the breaker escutcheon. The reset button also serves as a target indicator that the bell alarm has been operated. Ratings of the bell alarm contacts are shown in Table 7.4.

Table 7.4 Bell alarm contact ratings

Bell Alarm Contact Ratings	
AC Ratings	DC Ratings
6A @ 240Vac	0.5A @ 125Vdc 0.25A @ 250Vdc

Table 7.5

Field installable bell alarm kit catalog numbers *(Kit provides choice of with or without lockout)*	
WP-08 / 16 / 20	WP-32 / 40 / 50
WPBASF	WPBALF

Electrical Lockout (Field installable kit available)

The electrical lockout device provides a means to electrically enable or disable manual closing of a circuit breaker. This device must be energized prior to attempting to manually close the breaker. Once the breaker is closed, loss of voltage will not trip the breaker. A manual bypass interlock is provided for initial startup. Refer to the undervoltage device for ratings and coil characteristics. (Note: Interlocking of electrically operated breakers does not require an electrical lockout device.)

Table 7.6

Field installable electrical lockout kit catalog numbers		
Control voltage	WP-08 / 16 / 20	WP-32 / 40 / 50
120Vac 50/60Hz	WPELSF56120	WPELLF56120
240 Vac 50/60Hz	WPELSF56240	WPELLF56240
24Vdc	WPELSFDC024	WPELLFDC024
48Vdc	WPELSFDC048	WPELLFDC048
110Vdc	WPELSFDC110	WPELLFDC110
125Vdc	WPELSFDC125	WPELLFDC125
250Vdc	WPELSFDC250	WPELLFDC250

Fans and Fan Controller (WPS-50)

The WPS-50 breaker is provided with integrally mounted cooling fans. Fan control is initiated by the trip unit which signals a fan controller to turn the fans on and off when the load current exceeds or drops below 4200 amperes. The fan motors require 120Vac and the fan controller requires 24Vdc auxiliary power. Both the fans and the fan controller are wired to the breaker secondary disconnect. The 24Vdc source can be the POWER LEADER™ power supply used for MicroVersaTrip PM™ trip units. 120Vac is normally provided by the switchgear control power transformer. Power requirement for each fan is 0.2amps @ 120Vac (two fans installed).

Hidden-On Button (Field installable kit available)

All electrically operated WavePro breakers are provided with a manual close button on the escutcheon. For applications where manual closing is not desirable, the Hidden-On close button can replace the standard manual close button. This feature provides limited access to the mechanical close mechanism. For emergency or supervised operation, a 0.100” diameter rod can be inserted through a hole in the Hidden-On button to manually close the breaker. The Hidden-On feature provides double insulation between the operator and any live parts in the breaker. This feature is typically used on a breaker that is electrically interlocked with other breakers, such as in an automatic transfer scheme.

Table 8.1

Field installable “Hidden-On” button kit catalog number
WP-08 / 16 / 20 / 32 / 40 / 50
WPHIDONKIT1

Lifting Spreader

The lifting spreader is the interface between the breaker and the overhead breaker lifting device or any other portable lifting means that may be used for installing and removing the WavePro drawout breakers. It attaches to the breaker to provide stability when lifting the breaker from its drawout rails. Pickup points on the breaker and lifting spreader are designed for center-of-gravity lifting so that the breaker is not subject to excess movement when removed from the cubicle.

OEM Substructure

All WavePro drawout circuit breakers are integrated into switchgear or switchboard equipment by way of a substructure. The substructure includes the drawout rails, primary disconnects, and breaker rating rejection plate. Options for the substructure include shutters, secondary disconnects, key interlocks, position switch, current transformers, door interlock, and rail padlocking. For detailed information (catalog numbers, dimensions, installation instructions) on substructures and accessories for OEM applications, refer to the OEM handbook, DEB-011A Volume 3.

Open Fuse Lockout (OFLO)

The open fuse lockout device is provided with any fused breaker. The OFLO consists of an individual trip solenoid for each pole, connected directly across the fuse in that phase. When any fuse blows, the solenoid is energized and trips the breaker to prevent single-phasing. The breaker is mechanically locked out and cannot be reclosed until the fuse is replaced and the target indicator of the phase involved is reset.

When the fuses are mounted in a separate fuse roll-out (used with WPS-20, WPS-32, WPS-40, WPS-50) the open fuse lockout is wired to the fuses through secondary disconnects on the rollout and on the breaker. The OFLO utilizes dedicated secondary disconnect points, so no other breaker accessories are affected.

Operations Counter (Field installable kit available)

The operations counter mounts on the breaker as a five-digit, non-resettable counter actuated by the breaker closing mechanism.

Table 8.2 Field Installable Operations Counter kit catalog numbers

WP-08 / 16 / 20	WP-32 / 40 / 50
WPCTRSFKIT1	WPCTRLFKIT1

Padlocking Provisions

All WavePro breakers are furnished with standard padlocking provisions for operator safety. The breaker may be placed in a "trip-free" position by utilizing the padlock provision on the breaker escutcheon which holds the OPEN button depressed. This padlocking feature holds up to three locks.

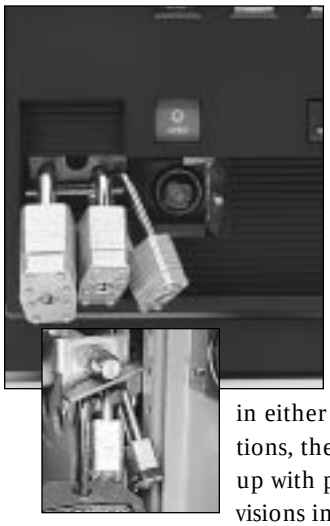

The breaker may also be padlocked in the test or disconnect position. When in either of these positions, the breaker lines up with padlocking provisions in the compartment or on the drawout rails and will accept up to three padlocks to secure the breaker in either the test or disconnect position.

"PM-Ready"

In its most basic form, a manually operated WavePro breaker, with a Power+™ or MicroVersaTrip Plus™ trip unit and no other accessories, may be able to be supplied without secondary disconnect points. The "PM-Ready" option equips the breaker with a secondary disconnect and inputs for 24Vdc auxiliary power, communications and 3-phase voltage signals. If the breaker is already equipped with any combination of ground fault protection, zone selective interlocking, shunt trip, auxiliary switch, bell alarm, undervoltage device, electric lockout, MicroVersaTrip PM™ or is electrically operated, the PM-ready wiring is automatically included and does not have to be specified. This "PM-Ready" option makes upgrading a WavePro breaker to MicroVersaTrip PM as simple as changing the trip unit. Breaker cubicles can be equipped with the necessary wiring to further simplify a PM-upgrade.

Racking Tool

The racking tool is a drive wrench with a square ½" socket that engages the racking mechanism on the breaker. One racking tool is used for all WavePro circuit breakers.

Remote Charge Indicator Switch

The remote charge indicator switch is a normally open dry contact that closes when the closing springs of the breaker are fully charged. This option is only available on electrically operated breakers. The contact is rated 4.0 amps at 120Vac and 0.5 amps at 125Vdc.

Remote Close Accessory with One-Shot Electronic Close Circuit (Field installable kit available)

The remote close accessory is an electrically operated solenoid, which when energized, closes the breaker. It is suitable for control interlock schemes in which manual closing capability would not be convenient or would be too slow. It is an optional accessory for a manually operated breaker but is always supplied with electrically operated breakers. The remote close accessory consists of the "one-shot" electronic close circuit, with built-in anti-pump feature, and the closing solenoid. The remote close accessory is continuously rated and operates as follows.

Applying control voltage to the close circuit produces a 250msec pulse to the closing coil which in turn releases the energy stored in the closing springs. The anti-pump feature prevents the breaker from repeatedly closing if the close signal is maintained. A momentary close signal (½ second duration) is sufficient to close the breaker but if the close signal is maintained while the breaker is closed, the signal must be removed and then reapplied in order to reclose the breaker. Reset time for the anti-pump circuit is approximately 2.5 seconds. For applications requiring rapid reclosure of a circuit breaker, a momentary close signal should be used. This allows the anti-pump circuit to reset while the closing springs are recharging and the breaker is then ready to reclose without any additional time delays. A close signal applied to a closed breaker will provide a pulse to the close coil but the closing mechanism is mechanically blocked thereby preventing the closing springs from discharging. The close signal must be removed as stated above before the breaker can be reclosed. Control power requirements for electrically charging and closing the breaker are shown in Tables 9.1 and 10.1.

Table 9.1 WP-08 / 16 / 20 circuit breakers

		Spring charging motor (amps)		Closing coil		
Nominal control voltage	Voltage range	Inrush	Sustained	Inrush (amps)	Charge / close fuse (amps)	Charging time (sec)
120v-60Hz	104-127	25.0	5.0	16.0	15	0.9
120v-50Hz	104-127	25.0	5.0	16.0	15	0.9
240v-60Hz	208-254	12.0	3.0	7.0	15	0.9
240v-50Hz	208-254	12.0	3.0	7.0	15	0.9
48Vdc	38-56	40.0	10.0	15.0	15	1.5
110/125Vdc	100-140	27.0	5.0	4.0	15	1.0
250Vdc	200-280	13.0	3.0	3.0	15	1.0

Table 10.1 WP-32 / 40 / 50 circuit breakers

		Spring charging motor (amps)		Closing coil		
Nominal control voltage	Voltage range	Inrush	Sustained	Inrush (amps)	Charge / close fuse (amps)	Charging time (sec)
120v-60Hz	104-127	25.0	8.1	16.0	15	1.5
120v-50Hz	104-127	25.0	8.1	16.0	15	1.5
240v-60Hz	208-254	11.7	3.5	7.0	15	1.3
240v-50Hz	208-254	11.7	3.5	7.0	15	1.3
48Vdc	38-56	22.0	16.5	15.0	15	2.0
110/125Vdc	100-140	25.0	7.0	4.0	15	1.7
250Vdc	200-280	13.0	3.2	3.0	15	1.7

Table 10.2 Field Installable Remote Close Accessory kit catalog numbers

Control voltage	WP-08 / 16 / 20	WP-32 / 40 / 50
120Vac 60Hz	WPRCSF60120	WPRCLF60120
120Vac 50Hz	WPRCSF50120	WPRCLF50120
240Vac 60Hz	WPRCSF60240	WPRCLF60240
240Vac 50Hz	WPRCSF50240	WPRCLF50240
48Vdc	WPRCSFDC048	WPRCLFDC048
110Vdc	WPRCSFDC110	WPRCLFDC110
125Vdc	WPRCSFDC125	WPRCLFDC125
250Vdc	WPRCSFDC250	WPRCLFDC250

Secondary Disconnect (Field installable kit available)

Inputs and outputs to the circuit breaker are wired through secondary disconnects located on the top of the breaker. The plug-style secondary disconnects engage mating disconnects in the breaker cubicle when the breaker is in the TEST or CONNECT position. Up to 72 dedicated points are available so that all breaker accessories can be wired to dedicated disconnect points. Refer to the breaker wiring diagrams shown on pages 30 and 31 for breaker accessory wiring.

Table 10.3 Field Installable Secondary Disconnect kit catalog numbers

WP-08 / 16 / 20 / 32 / 40 / 50	
Breaker side (female)	WPSDSUBF1
Cell side (male)	WPSDSUBM1

Shunt Trip (Field installable kit available)

The shunt trip allows remote electrical tripping of the circuit breaker. It is usually controlled by a switch or push button and may also be used in conjunction with protective relays for automatic tripping (the breaker trip units do *not* require the use of a shunt trip). The shunt trip coil is rated for intermittent duty and is supplied with an auxiliary switch contact that automatically removes control power following a breaker trip. A shunt trip is always supplied on electrically operated breakers. A redundant or 2nd shunt trip is available on 800-4000A frame breakers for special control applications. See Table 10.4 for shunt trip operating characteristics.

Table 10.4 Shunt trip operating characteristics

Nominal control voltage	Operating voltage range, V	Inrush current, A	Sealed current, A
70V, 60Hz	70-127	3.75	3.75
120V, 60Hz	95-127	12.3	10.8
120V, 50Hz	95-127	7.6	6.7
208V, 60Hz	165-220	3.2	2.6
208V, 50Hz	165-220	3.8	3.1
240V, 60Hz	190-254	3.9	3.4
240V, 50Hz	190-254	4.7	4.1
24Vdc	14-30	8.3	8.3
48Vdc	28-60	4.5	4.5
125Vdc	70-140	2.0	2.0
250Vdc	140-280	1.0	1.0

Table 10.5 Field Installable Shunt Trip 1 kit catalog numbers

Control voltage	WP-08 / 16 / 20	WP-32 / 40 / 50
70Vac 60Hz	WPS1SF60070	WPS1LF60070
120Vac 60Hz	WPS1SF60120	WPS1LF60120
120Vac 50Hz	WPS1SF50120	WPS1LF50120
208Vac 60Hz	WPS1SF60208	WPS1LF60208
208Vac 50Hz	WPS1SF50208	WPS1LF50208
240Vac 60Hz	WPS1SF60240	WPS1LF60240
240Vac 50Hz	WPS1SF50240	WPS1LF50240
12Vdc	WPS1SFDC012	WPS1LFDC012
24Vdc	WPS1SFDC024	WPS1LFDC024
48Vdc	WPS1SFDC048	WPS1LFDC048
110/125Vdc	WPS1SFDC125	WPS1LFDC125
250Vdc	WPS1SFDC250	WPS1LFDC250

Table 10.6 Field Installable Shunt Trip 2 kit catalog numbers

Control voltage	WP-08 / 16 / 20	WP-32 / 40
120Vac 60Hz	WPS2SF60120	WPS2LF60120
240Vac 60Hz	WPS2SF60240	WPS2LF60240
24Vdc	WPS2SFDC024	WPS2LFDC024
110/125Vdc	WPS2SFDC125	WPS2LFDC125
250Vdc	WPS2SFDC250	WPS2LFDC250

Spring Charging Motor

The spring charging motor is supplied on all electrically operated breakers. The breaker closing springs are charged automatically when control voltage is applied to the breaker. When the springs are fully charged, a cutoff switch de-energizes the motor. The closing springs will recharge automatically after the breaker closes unless an external switch con-

tact is wired into the spring charging circuit. If control power is lost during the spring charging cycle, spring charging can be completed using the manual pump handle — no special tools or separate handles are required. The *optional remote charge indicator* contact can be supplied to provide a contact closure when the springs are fully charged. Refer to Tables 9.1 and 10.1 for spring charging motor operating characteristics.

Test Kit

The test kit, catalog number TVRMS2, is a portable, battery- or ac-powered unit that is used for trip unit health checks and also provides functional trip and no-trip tests of the trip unit. It can be used to defeat the ground fault function of the trip unit when performing high current tests on the circuit breaker. The test kit supplies 24Vdc auxiliary power for cold set-up and viewing of trip targets on trip units not equipped with on-board batteries. The display on the test kit can be used to verify pickup and delay settings that have been programmed into the trip unit. This test kit is designed for use with all Power+™ , MicroVersaTrip Plus™ and MicroVersaTrip PM™ trip units.

Undervoltage Device (Field installable kit available)

The undervoltage device protects against harmful drops or complete loss of voltage by automatically tripping the breaker. The undervoltage device can be used to sense the drop or loss of bus voltage through the use of voltage transformers or it can monitor a control voltage source. This device is set to pick-up at approximately 85% of rated voltage and will drop out instantaneously between 30 and 60% (nonadjustable) of rated voltage. An electronic module on the undervoltage device provides accurate and repeatable operating characteristics. The undervoltage device is available with an optional static time delay unit. This unit offers a field-adjustable two- to six-second delay between undervoltage occurrence and breaker trip, thus preventing potential nuisance tripping due to momentary loss of voltage. The time delay unit is mounted externally to the breaker. It is rated 125Vdc or 250Vdc or 208/240Vac, 50/60Hz. For any other AC source voltage, a control power transformer with a 240v secondary, rated at least 100VA, is required. Refer to Table 11.1 for undervoltage device operating characteristics.

Table 11.1 Undervoltage device operating characteristics

Nominal control voltage	Operating voltage range	Holding current, A
120Vac	Pickup at 80% of nominal control voltage, drop out at 30-60% (non-adj) of nominal control voltage	0.15
240Vac		0.07
24Vdc		0.58
48Vdc		0.32
125Vdc		0.15
250Vdc		0.07

Table 11.2 Field Installable Undervoltage Device kit catalog numbers

Control voltage	WP-08 / 16 / 20	WP-32 / 40 / 50
120Vac 50/60Hz	WPUVSF56120	WPUVLF56120
240Vac 50/60Hz	WPUVSF56240	WPUVLF56240
24Vdc	WPUVSFDC024	WPUVLFDC024
48Vdc	WPUVSFDC048	WPUVLFDC048
110Vdc	WPUVSFDC110	WPUVLFDC110
125Vdc	WPUVSFDC125	WPUVLFDC125
250Vdc	WPUVSFDC250	WPUVLFDC250

Table 11.3 Field Installable Time Delay Undervoltage Device kit catalog numbers (order Static Time Delay Unit separately)

Control voltage	WP-08 / 16 / 20	WP-32 / 40 / 50
208/240Vac 50/60Hz	WPUVSFTD240	WPUVLFTD240
125Vdc	WPUVSFTD125	WPUVLFTD125
250Vdc	WPUVSFTD250	WPUVLFTD250

Table 11.4 Static Time Delay catalog numbers

Nominal Control Voltage	Catalog Number
125Vdc	TAKYUVT-1
250Vdc	TAKYUVT-2
208/240Vac	TAKYUVT-3

Power+™ Trip Unit Systems

The Power+ trip unit system for WavePro™ low voltage power circuit breakers consists of the trip unit, the trip actuator, current sensors and rating plugs. Power+ trip units provide a complete range of standard and optional overcurrent and ground-fault protective functions.

Components of Power+ trip unit systems

True RMS Sensing

The Power+ trip unit continues to use GE's proven technique of measuring true rms currents of both sinusoidal and harmonically distorted waveforms. The frequent sampling (48 times per cycle per phase) allows precise calculations of true rms current. The sampling rate allows waveform measurements up to the 11th harmonic. GE's true rms sensing avoids potential underprotection or overprotection problems associated with peak-sensing tripping systems.

Trip Target Module (Optional)

- *View Button:* Press the VIEW button to check the trip unit status.
- *Reset Button:* Press the RESET button to clear any target that is set.
- *Battery check:* Target modules use two standard, 3V, lithium batteries for viewing target information. Battery life depends upon use, but may be estimated at one year. When the batteries are energized, depressing the VIEW button will illuminate either a set target LED, i.e., OVL or the BAT LED. Once target indicators are cleared, battery status is indicated by the BAT LED. Replacement batteries include Panasonic CR1616, Eveready E-CR1616BP, or Duracell DL1616B, which may be purchased commercially.
- *Long-time pickup:* The long-time pickup indicator moves through two transitions. As the current in any phase reaches 95% of its setpoint, the LTPU LED begins to flash. As current increases, flashing frequency increases, until 100% of the pickup point is reached. At that moment, the LTPU LED stays on continuously until the long-time delay times out. Once the breaker has tripped on long-time, the OVL target will be stored in memory. To view the trip, press the VIEW button. To clear the target, press the RESET button.
- *Short-time and instantaneous trips:* Short-time and instantaneous trips share the same trip target. The LTPU LED is not illuminated, since the time intervals between pickup and tripping are too short for either function. Once the breaker has tripped on short-time or instantaneous, the SHORT target will be stored in memory. To view the trip, press the VIEW button. To clear the target, press the RESET button.
- *Ground fault trip (TargetO2 only):* The trip target for a ground fault trip is the GF LED. To view the trip, press the VIEW button. To clear the target, press the RESET button.
- *Health monitor:* Trip unit health status "okay" is illustrated by slow blinking of the LTPU LED. It may be seen by depressing and holding the VIEW button. Sufficient power must be supplied to the trip unit via external test kit, power pack, or current transformers for the health monitor to be operational.

Power+ trip target module

Table 12.1 WavePro Breaker Power+ Trip Unit Target Module

Power+ Trip Unit Suffix	Power+ Target Module Catalog Number
(none)	TARGET00 (blank)
T1	TARGET01 (w/0 GF)
T2	TARGET02 (with GF)

Operation of Power+™ Trip Units

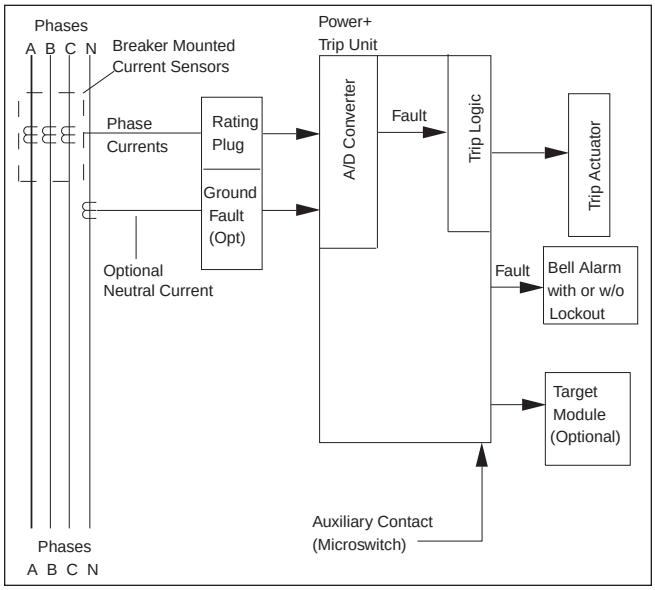

Block diagram of Power+ trip unit

Power+ trip units have a variety of standard and optional functions. The block diagram shows a fully configured Power+ trip unit with ground-fault protection. The current sensors are special current transformers that provide the trip unit with its operating power. Interchangeable rating plugs act as scalars for the outputs of the current sensors, as well as establish the current rating of individual breakers. When a four-wire system is used and ground fault protection is called for, an external neutral sensor is necessary.

Analog current signals are converted to digital values, and are measured and compared with established trip settings in the microprocessor's memory. Any overcurrent or ground fault condition that exceeds preset conditions produces a trip signal from the microprocessor to the trip actuator. The trip actuator is a low energy, positive-action tripping device. The low-level trip signal counteracts the strength of the actuator's permanent magnet, and allows a spring to unseal the magnet and trip the breaker.

The bell alarm contacts operate only as a result of an overload, short circuit or ground fault trip condition.

Standard and Optional Protective Functions

Standard and optional protective functions for Power+ trip units are shown below. The breaker settings are programmed in multiples of "X" (rating plug amp values), "S" (current sensor amp rating values), and "C" (the long-time setting in amps — multiply long-time setting by rating plug amp rating).

Standard

- Adjustable Long-Time (L) Pickup, 0.5-1.1X, with four delay bands.
- Adjustable Instantaneous (I) Pickup, up to 15X (see table 21.1 on page 21 for applicable ranges).

Options

- Overload, Short Circuit, and Ground Fault local trip indicators with overload pickup warning and trip unit health monitor.
- Adjustable Short-Time (S) Pickup, 1.5-9.0C, and delay (3 bands) with I^2t IN/OUT selection.
- Adjustable Ground Fault (G) Pickup, 0.2-0.6S*, and delay (3 bands) with I^2t IN/OUT selection.
- Upgradeable Ground Fault function with use of appropriate ground fault rating plug.

* Maximum ground fault setting is limited to 1200 amperes.

Long-Time Protective Functions

Long-Time Function/Current Setting (Standard)

The adjustable long-time setting is based on multiples of "X," the rating plug ampere rating. There are eight possible settings from 50% to 110% of rating plug amps. This setting established the current setting of the breaker which is the current the breaker will carry continuously without tripping. Multiplying the long-time setting by the rating plug value establishes the value of "C." For example, a breaker with a 95% long-time setting and 500 amp rating plug (X) would have a 475 amp current setting, or value of C.

Long-time current setting (C) = (0.50 to 1.10) x rating plug (X)

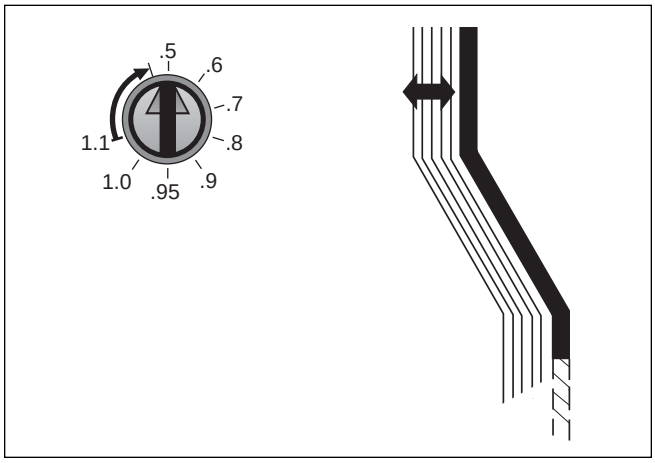

Long-time function, or current setting

Long-Time Delay (Standard)

Long-time delay varies the time it will take the breaker to trip under sustained overload conditions. It permits the breaker to ride through momentary predictable overloads (e.g., motor starting) without tripping. There are four time bands that provide nominal delays from 3 to 25 seconds at 600% of the breaker's current setting, or value of C.

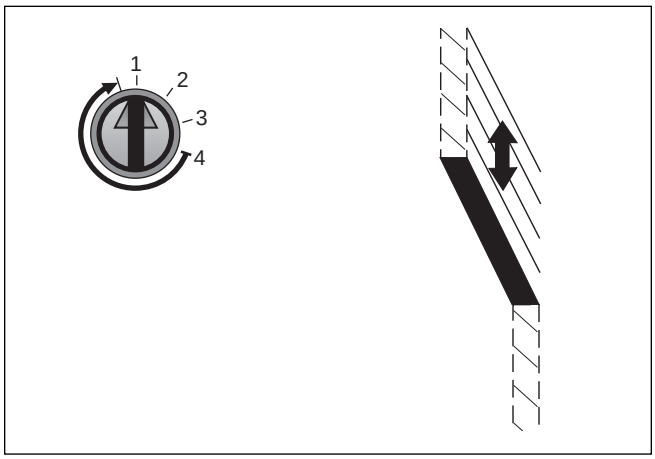

Long-time delay

Instantaneous Function

The instantaneous trip point establishes the value of current that will trip the breaker without intentional time delay. Instantaneous trip times are 50 milliseconds or less. Instantaneous trips are the result of severe overcurrent or short-circuit conditions and damage to the power system is minimized by immediate tripping. Standard settings are adjustable in multiples of the rating plug amp value (X). See Table 21.1 for allowable values. Maximum setting is dependent on breaker frame size and the inclusion of a short time function on the trip unit. Instantaneous trips are standard on WavePro breakers and can be used in conjunction with or be replaced by the short time function. At 480 and 600 volts, WavePro circuit breakers have the same interrupting ratings with and without instantaneous trips. This means that the instantaneous trips on the breakers can be eliminated with no impact on interrupting rating. This is beneficial when selecting the trip characteristics of main and tie breakers, and feeders that must coordinate with instantaneous trips downstream. There are no "hidden" instantaneous trips on WavePro breakers when the instantaneous function is eliminated.

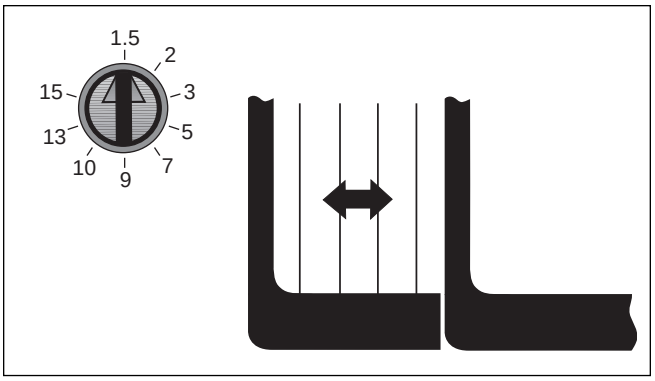

Instantaneous function

Short-Time Functions (Optional)

Short-Time Pickup — The short-time pickup function controls the level of high current the breaker will withstand for short periods of time to allow downstream devices to clear faults without tripping the breaker. Settings are adjustable in increments of the breaker current setting (C). See Table 21.1 for allowable values. If the instantaneous setting is set for lower values of current than the short-time function, the instantaneous function prevails.

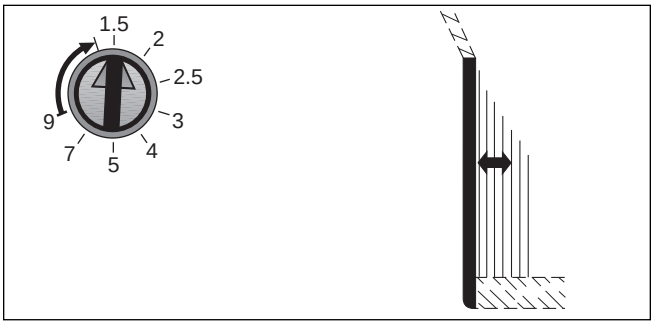

Short-time pickup function

Short-Time Delay

Short-time delay is always provided when short-time pickup is ordered. Short-time delay provides additional refinement in providing coordination between upstream and downstream protective devices. There are three time delay bands [1 (MIN), 2 (INT), 3 (MAX)] that provide delays from 100 ms to 350 ms.

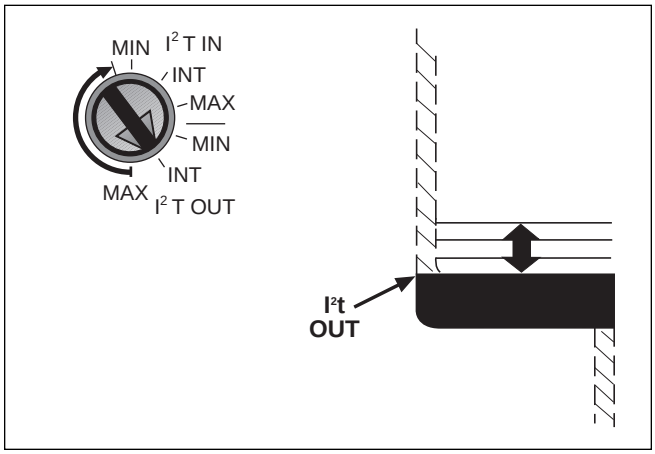

Short-time delay with I²t OUT

Selectable Short-Time I²t function

Selectable short-time I²t is always provided with the short-time option. The I²t helps the solid-state trip unit coordinate with downstream thermal magnetic devices or fuses. This function impacts the shape of short-time pickup and short-time delay time current curves and may be programmed either IN or OUT.

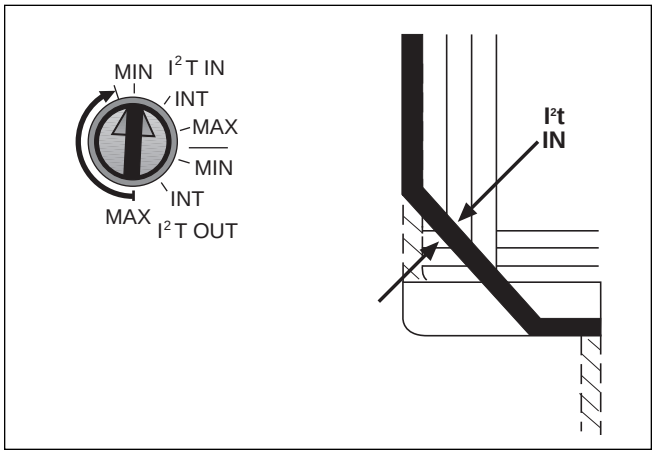

Short-time delay with I²t IN

Ground-Fault Protection (Optional)

Ground-Fault Protection

Power+ trip units are field upgradeable to include ground fault protection. To upgrade to the ground-fault option, simply remove the rating plug that does not have the ground-fault option and install a ground-fault rating plug.

Once installed, the ground-fault function is enabled and adjusted through the pickup and delay selector switches on the rating plug. The optional Defeatable Ground Fault includes an "OFF" setting on the ground fault delay selector switch to allow ground fault to be temporarily disabled for maintenance or testing purposes.

A ground-fault is an unintentional current flow from a circuit through a conductive path to ground. Ground faults usually have intermittent or very low values of current flow, as depicted in Graph Ⓐ, and are not detected by long-time overload protection. Some ground-fault trip systems may not detect this type of fault because the intermittent nature of the fault never exceeds the trip threshold as illustrated in Graph Ⓑ. The Power+ trip unit detects and integrates (adds a series of arcing and intermittent current pulses) the low-level current of a ground fault. This integration function provides a memory response for ground faults to achieve preferred ground-fault protection as shown in Graph Ⓒ.

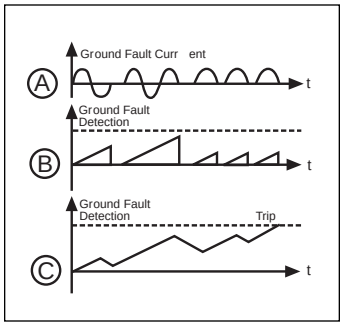

Ground-fault memory circuit

The NEC requires that the maximum ground-fault setting not exceed 1200 amps. Ground-fault protection includes pickup setting, ground-fault delay settings and selectable 1²t function. Ground-fault pickup settings are based on multiples of S, the current sensor rating. The lowest setting is 20% of S, and the highest setting is based on current sensor amp ratings, such that the maximum setting does not exceed 1200 amps. There are three ground-fault delay bands of 1 (MIN), 2 (INT), 3 (MAX) ranging from 100 ms to 350 ms. The I²t function adds an I²t slope to the square corner of the ground-fault time current curve transition, from pickup to the constant delay bands, to improve coordination with downstream devices.

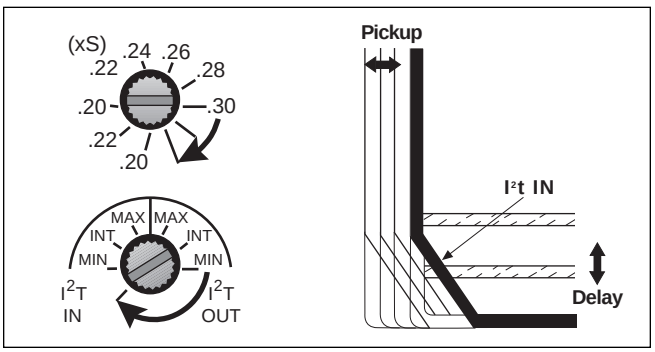

Ground-fault pickup and delay

Rating Plugs

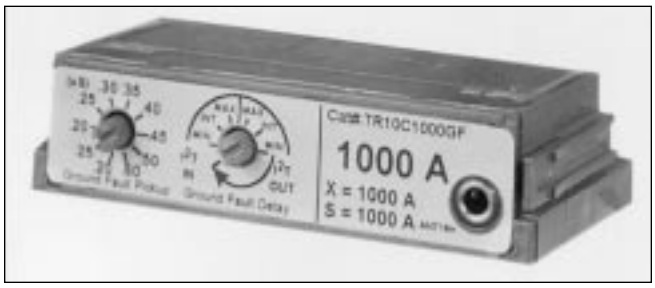

Power+™ trip unit rating plug

A new interchangeable rating plug is used in the Power+ trip unit across the entire WavePro circuit breaker product line. Rating plugs are the key devices that establish the current rating of the breaker. They provide an essential scaling function for the unit's microprocessor and ensure maximum accuracy. They are also used to provide ground fault protection as well as supplying a jack for connection to an external battery pack or the TVRMS2 trip unit test kit. Power+ rating plugs are available in three configurations:

- No ground-fault protection
- Ground-fault protection
- Defeatable ground-fault protection (not UL)

The ground fault rating plugs have switches for ground fault pickup and delay settings. A suffix in the rating plug catalog number determines whether the rating plug provides ground fault protection and if the ground fault protection is defeatable. Refer to Table 27.3 for the appropriate rating plug catalog number and suffix.

Rating plugs have rejection features that allow them to be inserted only with breakers containing the correct current sensors. Rating plugs for the Power+ trip unit cannot be used with MicroVersaTrip Plus™ and MicroVersaTrip PM™ trip units. See Table 16.1 for available ratings.

Table 16.1 Breaker/Sensor/Rating Plug Combinations for Power+

Breaker Frame Rating (Amps)	Sensor Rating (S)	Available Rating Plugs with or without Ground Fault (X)
800	150	80, 100, 125, 150
800	400	200, 225, 250, 300, 400
800/1600	800	400, 500, 600, 700, 800
1600	1600	800, 1000, 1200, 1600
2000	2000	1000, 1200, 1600, 2000
3200	3200	1200, 1600, 2400, 3200
4000	4000	1600, 2000, 2500, 3000, 4000

Power+ trip units are not available on 5000 amp (WPS-50) breakers

Current Sensors

Toroidally wound current sensors are furnished for all major protective functions for the Power+ trip unit and also for metering if the trip unit is upgraded to MicroVersaTrip PM — upgrading does not require changing the factory installed current sensors. There are seven current sensor ratings for the WavePro breaker line through 4000 amps. See Table 16.1 above for current sensor ratings. Ratings plugs must be coordinated with the current sensor rating (S) listed on the face of the rating plug.

Bell Alarm

Activation of the Bell Alarm is controlled by the trip unit. All protective function trips initiated by the trip unit will cause the bell alarm (if so equipped) to operate. Reset of the bell alarm contacts and the mechanical lockout (if provided) is by way of the reset button on the breaker escutcheon.

The Enhanced MicroVersaTrip Plus™ And MicroVersaTrip PM ™ Trip Unit Systems

The enhanced MicroVersaTrip Plus and MicroVersaTrip PM trip unit systems for WavePro™ low voltage power circuit breakers consist of the trip unit, the trip actuator, current sensors and rating plug. The term "trip unit system" applies to the combination of these four components which form the circuit breaker solid-state tripping system.

MicroVersaTrip Plus trip units provide a complete range of standard and optional overcurrent and ground-fault protective functions. MicroVersaTrip PM trip units add advanced metering, communications and protective relaying functions. MicroVersaTrip PM trip units operate with the GE POWER LEADER™ Power Management System.

Components of MicroVersaTrip Plus unit system

True RMS Sensing

Enhanced MicroVersaTrip Plus and MicroVersaTrip PM trip units continue to use GE's proven technique of measuring true rms currents (and voltages for MicroVersaTrip PM trip units) of both sinusoidal and harmonically distorted waveforms. The sampling rate of 64 times per cycle per phase allows precise calculations of true rms current and waveform measurements up to the 31st harmonic to achieve accuracies of 99%. GE's true rms sensing avoids potential underprotection or overprotection problems associated with peak-sensing tripping systems.

Enhancements To MicroVersaTrip Plus And MicroVersaTrip PM Trip Units

Enhancements include several functions that simplify programming and make fault displays easier to read and interpret.

Batteries

Replaceable, long-life lithium batteries provide programming and display power to the trip unit's LCD on command. With the breaker disconnected from the source and load, the trip unit can be removed from the breaker and all setpoints can be defined at a technician's desk. Caution: the batteries are automatically shut off when no programming operation or display request is called for within 30 seconds after the last key is pressed. The batteries also enable the user to read fault displays on an open breaker.

Batteries are not required to energize the trip unit display as long as a small amount of current (20% of current sensor rating) is flowing through the circuit breaker. The displays of installed MicroVersaTrip PM trip units are visible at all times due to an external 24Vdc input to the trip unit.
The batteries are not required to maintain programmed settings, or to store trip information. They simply provide a local power source to energize the trip unit when no other source of power is available. All setpoints, time delays and other programming functions are stored in non-volatile memory within the trip unit's microprocessor.

Batteries have a two year life under normal use and are user-replaceable.

LCD

The LCD (Liquid Crystal Display) has increased contrast to improve legibility in poor lighting conditions. International display symbols are used for various programming functions (e.g., "I>>" for short circuit and "I>" for overload).

Trip Operations Counter

The enhanced MicroVersaTrip Plus and MicroVersaTrip PM trip units also store and display the total number of trips due to long time overloads, short time and instantaneous short circuit, and ground faults. Each display stores up to 256 operations per trip category before resetting to zero. Each counter can be individually reset through the keypad.

Operation Of MicroVersaTrip Plus™ Trip Units

MicroVersaTrip Plus trip units have a menu of standard and optional functions. The block diagram shows a fully configured MicroVersaTrip Plus trip unit with ground-fault protection. The current sensors are special current transformers that provide the trip unit with its operating power. Interchangeable rating plugs act as scalars for the outputs of the current sensors, as well as establish the current rating of individual breakers. When a four-wire system is used and ground-fault protection is called for, an external neutral sensor is necessary.

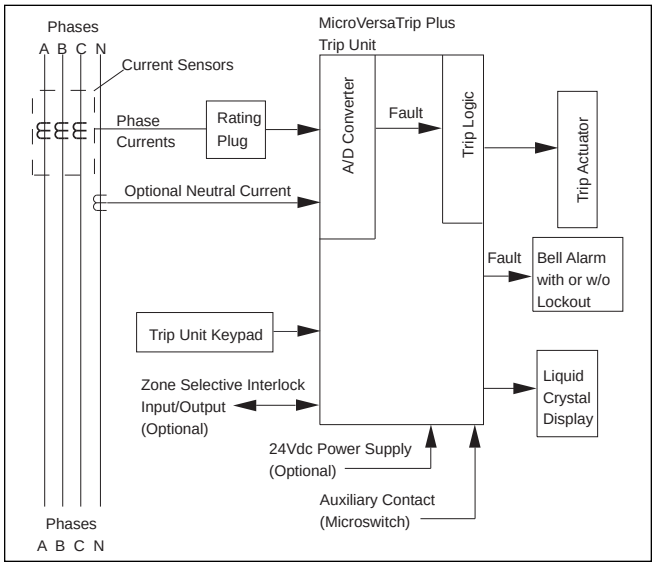

Block diagram of MicroVersaTrip Plus trip unit

Analog current signals are converted to digital values, and are measured and compared with established trip settings in the micro processor's memory. Any overcurrent or ground fault condition that exceeds preset conditions produces a trip signal from the micro processor to the trip actuator. The trip actuator is a low-energy, positive-action tripping device. The low-level trip signal counteracts the strength of the actuator's permanent magnet, and allows a spring to unseal the magnet and trip the breaker.

All trip unit protective functions will operate the bell alarm accessory (if so equipped). The two normally open and two normally closed contacts will change state whenever the trip actuator causes the breaker to open. The bell alarm is not activated by any other manual or electrical tripping means.

Standard And Optional Protective Functions

Standard and optional protective functions for MicroVersaTrip Plus trip units are shown below. The breaker settings are programmed in multiples of "I_n" (rating plug amp values),"CT"(current sensor amp rating values), and "LT" (the long-time setting in amps-multiply long-time setting by rating plug amp rating).

Standard

- 3-phase Ammeter with ±2% accuracy.
- Adjustable Long-Time (L) pickup, 0.5- 1.1I_n, with four delay bands.
- Adjustable instantaneous (I) pickup, 1.5 - 9/10/13 or 15I_n.
- Overload and Short Circuit local trip indicators with overload pickup warning.
- Test set initiated trip indication.

Options

- Adjustable Short-Time (S) pickup, 1.0 - 9.0LT, and delay (3 bands) with I^2t IN/OUT selection.
- Adjustable Ground Fault (G) pickup, 0.2 - 0.6CT, and delay (3 bands) with I^2t IN/OUT selection and trip indicator.
- Zone selective interlocking for Ground Fault or Ground Fault and Short-Time.
- Defeatable Ground Fault function (non-UL).
- Switchable Short Time or Instantaneous and Ground Fault function (non-UL).

Long-Time Protective Functions

- *Long-Time Function/Trip Setting (Standard)*
  The adjustable long-time setting is based on multiples of the rating plug amp rating. There are 13 possible settings from 50% to 110% of rating plug amps, in 5% steps. This setting establishes the trip setting of the breaker which is the current the breaker will carry continuously without tripping. Multiplying the long-time setting by the rating plug value establishes the value of "LT". For example, a breaker with a 95% long-time setting and 500-amp rating plug (I_n), would have a 475-amp trip setting value of LT.

  (Long-Time current setting (LT) = (0.50 to 1.10) x rating plug (I_n))

Long time function

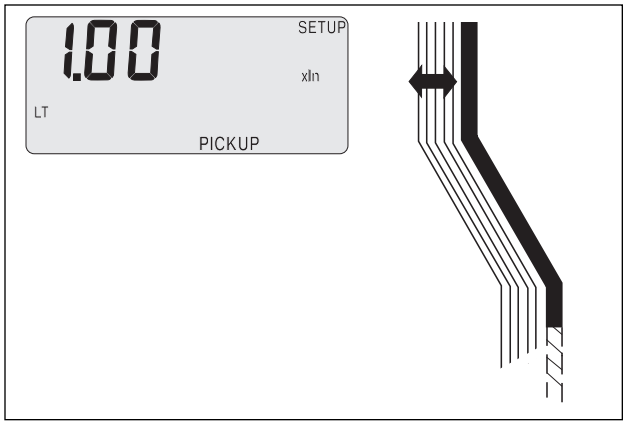

- *Long-Time Delay (Standard)*
  Long-time delay varies the time it will take the breaker to trip under sustained overload conditions. It permits the breaker to ride through momentary predictable overloads (e.g. motor starting) without tripping. There are 4 time bands that provide nominal delays from 2.4 to 20 seconds at 600% of the breakers current setting, or value of LT.

Long time delay

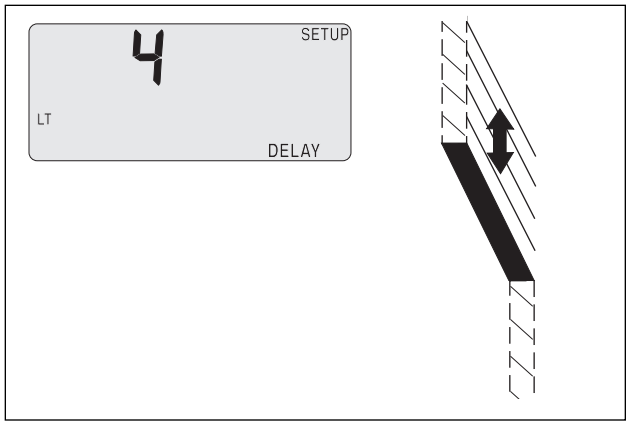

Instantaneous Function (Standard)

All WavePro™ breakers are available with standard adjustable instantaneous trip function. The instantaneous trip point establishes the value of current that will trip the breaker without intentional time delay. Instantaneous trip times are 50 milliseconds, or less. Instantaneous trips are the result of severe overcurrent or short circuit conditions, and damage to the power system is minimized by immediate tripping. Standard settings are adjustable in increments of .5 times the rating plug amp value (I_n). See Table 21.1 for allowable values. Instantaneous trips may be omitted when the optional short time trip function is supplied.

Standard Instantaneous function

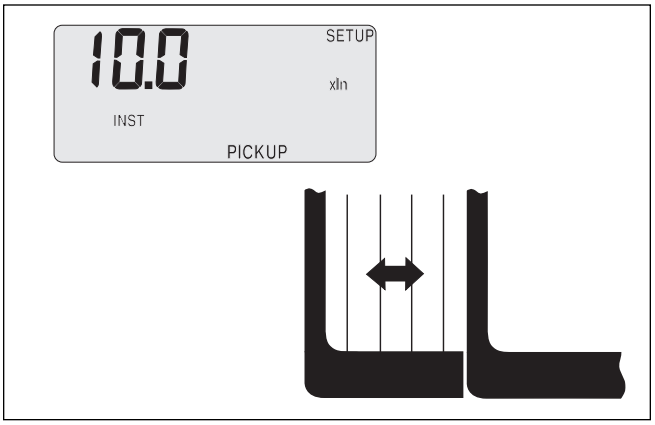

Short-Time Functions (Optional)

- *Short-Time Pickup*
  The short-time pickup function controls the level of high current the breaker will withstand for short periods of time to allow downstream devices to clear faults without tripping the breaker. Settings are adjustable in increments of 50% of the breaker trip setting (LT). See Table 21.1 for allowable values. The short time trip function may be used in conjunction with or in place of the instantaneous trip function.

Short-time pickup function

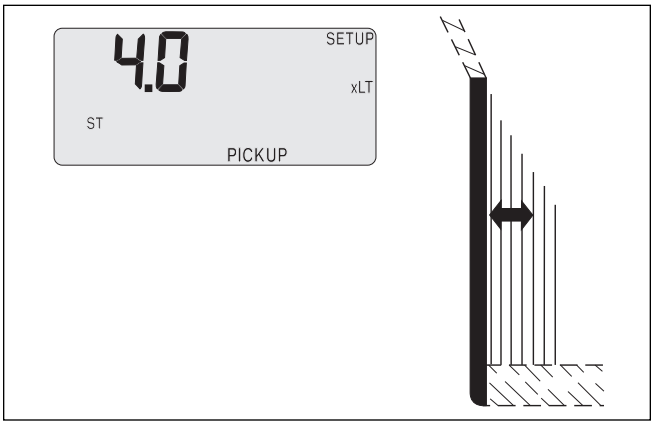

- *Short-Time Delay*
  Short-time delay is always provided when short-time pickup is ordered. Short-time delay provides additional refinement for coordination between upstream and downstream protective devices. There are 3 time delay bands that provide delays from 100msec to 350msec corresponding to trip unit settings of 1 (MIN), 2 (INT) 3 (MAX).

Short time delay with I²t OUT

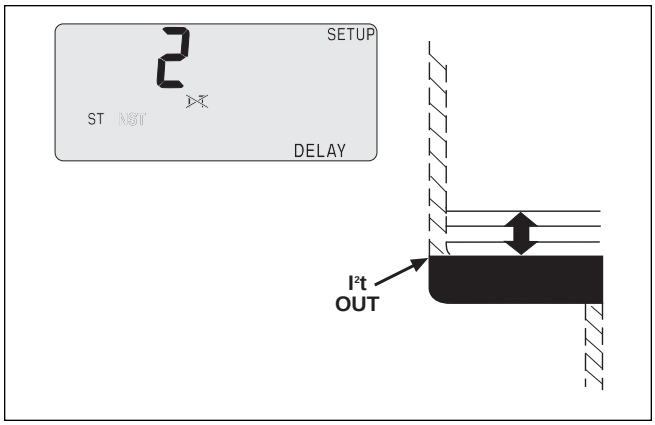

Selectable Short-Time I²t Function

Selectable short-time I²t is always provided with the short-time option. The I²t allows the solid-state trip unit to better coordinate with downstream thermal magnetic devices or fuses. This function impacts the shape of short-time pickup and short-time delay time current curves, and may be programmed either IN or OUT.

Short time delay with I²t IN

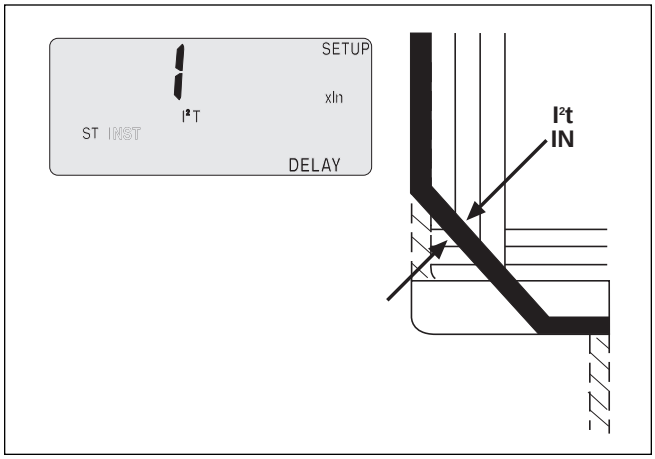

Ground-Fault Protection (Optional)

Ground-Fault Protection

A ground fault is an unintentional current flow from a circuit through a conductive path to ground. Ground faults usually have intermittent or very low values of current flow as depicted in Graph Ⓐ, and are not detected by long-time overload protection. Some ground-fault trip systems may not detect this type of fault because the intermittent nature of the fault never exceeds the trip threshold as illustrated in Graph Ⓑ. The MicroVersaTrip Plus™ and MicroVersaTrip PM™ trip units detect and integrate (add a series of arcing and intermittent current pulses) the low-level current of a ground fault. This integration function provides a memory response for ground faults to achieve preferred ground fault protection as shown in Graph Ⓒ. The NEC requires that the maximum ground-fault setting not exceed 1200 amps. Ground-fault protection includes independent pickup and delay settings and selectable I²t function.

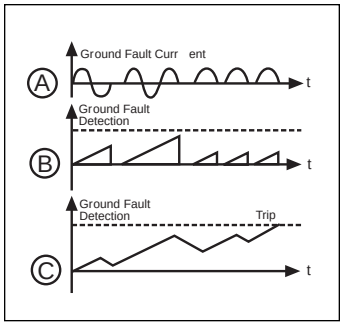

Ground-fault memory circuit

Ground-fault pickup settings are based on multiples of CT, the current sensor rating. The lowest setting is 20% of CT, and the highest setting is based on current sensor amp ratings, such that the maximum setting does not exceed 1200 amps. There are three ground-fault delay bands of 1 (MIN), 2 (INT), 3 (MAX) ranging from 100 ms to 350 ms. The I²t function modifies the square corner of the ground-fault time current curve transition, from pickup to the constant delay bands, to improve coordination with downstream devices.

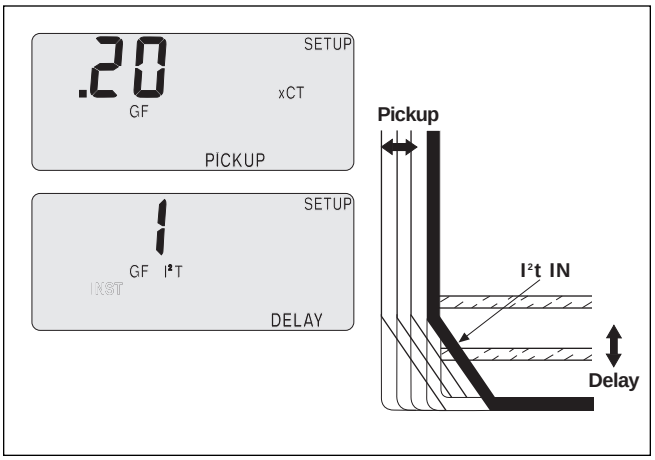

Ground-fault pickup and ground-fault time delay

Table 21.1 Power+™, MicroVersaTrip Plus™ and MicroVersaTrip PM™ Trip Unit Characteristics

Frame Size	Max. Amp Rating	Sensor Rating (Amps) (CT)	Long-time		Short-time	
			Long Time (LT) (Pickup) Multiple of Rating Plug Amps (I_n)	① Delay [Band] (Seconds)	Pickup (Multiple of Long Time) (LT)	Delay [Band] (Seconds)
WPS-08 / WPH-08 WPX-08 / WPF-08	800	150, 400, 800	Power+ 0.5 thru 1.1 in in steps of 0.1		Power+ 1.5, 2.0, 2.5, 3.0, 4.0, 5.0, 7.0, 9.0	I^2t in 0.40
WPS-16 / WPH-16 WPF-16	1600	800, 1600		[1] [2] [3] [4]		
WPS-20	2000	2000		2.4, 4.9, 9.8, 20		②I^2t out
WPS-32 / WPH-32	3200	3200	MVT Plus/PM		MVT Plus/PM	[1] [2] [3]
WPS-40	4000	4000	0.5 thru 1.1 in		1.5 thru 9.0	.10, .21, .35
WPS-50 ④	5000	5000	in steps of 0. 05		in steps of 0.5	

Frame Size	Adjustable Instantaneous Pickup without ST (Multiple of Rating Plug Amps) (I_n)	Adjustable Instantaneous Pickup with ST (Multiple of Rating Plug Amps) (I_n)	Ground Fault		
			Pickup (Multiple of Sensor Amp rating) (CT)	Delay with I^2t (Seconds)	Delay without I^2t [Band] (Seconds) ③
WPS-08 WPH-08 WPX-08 WPF-08 WPS-16 / WPH-16 WPF-16 WPS-20	Power+ 1.5, 2.0, 3.0, 5.0, 7.0, 9.0, 10.0,	Power+ 1.5, 2.0, 3.0, 5.0, 7.0, 9.0, 10.0, 13.0, 15.0 MVT Plus/PM 1.5 thru 15.0 in steps of 0.5	Power+ .20, .25, .30, .35, .40, .45, .50, .60 MVT Plus/PM 0.20 thru 0.60 in steps of 0.01	.44 at 200% of pick up at lower limit of band	[1] [2] [3] .10, .21, .35
WPS-32 / WPH-32	MVT Plus/PM 1.5 thru 10.0 in steps of 0.5	Power+ 1.5, 2.0, 3.0, 5.0, 7.0, 9.0, 10.0, 13.0 MVT Plus/PM 1.5 thru 13.0 in steps of 0.5	Power+ .20, .22, .24, .26, .28, .30, .34, .37 MVT Plus/PM 0.20 thru 0.37 in steps of 0.01		
WPS-40	Power+ 1.5, 2.0, 3.0, 5.0, 7.0, 9.0 MVT Plus/PM 1.5 thru 9.0 in steps of 0.5	Power+ 1.5, 2.0, 3.0, 5.0, 7.0, 9.0 MVT Plus/PM 1.5 thru 9.0 in steps of 0.5	Power+ .20, .22, .24, .26, .28, .30 MVT Plus/PM 0.20 thru 0.30 in steps of 0.01		
WPS-50 ④	MVT Plus/PM 1.5 thru 7.0 in steps of 0.5	MVT Plus/PM 1.5 thru 7.0 in steps of 0.5	MVT Plus/PM 0.20 thru 0.24 in steps of 0.01		

① Time delay shown at 600% of current setting at lower limit of band.
② Time delay shown at lower limit of each band. All pickup tolerances are ±10%.
③ Time delay shown at lower limit of band. Ground-fault pickup not to exceed 1200 amps.
④ Power+ not available on 5000 amp (WPS-50) circuit breaker.

(X) I_n = Rating plug amps
(S) CT = Sensor amp rating
(C) LT = Long-time current setting
ST = Short Time function

Defeatable Ground-Fault Protection (Optional) — Not UL Listed
A defeatable ground-fault function is offered for users who want the ability to enable or disable ground-fault protection depending on special circumstances. When this type of ground-fault protection is ordered, in addition to the normal ground-fault settings, the user can disable ground-fault protection during programming by setting the delay to OFF.

Switchable Short Time or Instantaneous and Ground-Fault Protection (Optional) — Not UL Listed
Special breaker applications may require the ability to selectively enable and disable the short circuit protection and/or ground fault protection of the breaker. Switchable short time or instantaneous allows either the short time function or the instantaneous function to be disabled for use in unique situations such as a breaker functioning as a spare for several feeders with different trip characteristics. Both short time and instantaneous functions can be enabled but both cannot be disabled. Switchable ground fault protection is similar to the defeatable ground fault function in that it can be enabled or disabled via the ground fault delay setting.

Zone Selective Interlocking (Optional)
Traditional means of obtaining selectivity between main and feeder breakers is to set the furthest downstream device with the lowest time delays, and increase time delays of upstream devices. The disadvantage of this is that upstream portions of the system must endure high values of fault current until time-out occurs.

Breakers equipped with MicroVersaTrip Plus™ or MicroVersaTrip PM™ trip units can provide improved protection to zones between breakers through the use of Zone Selective Interlocking. When a downstream breaker (feeder) detects a fault, it signals the upstream device (main) to shift to its preset time delay band, allowing the downstream device to clear the fault while the upstream device provides backup protection. If a fault occurs between two breakers equipped with zone selective interlocking, the upstream breaker would clear the fault on the minimum delay band because it receives no interlock signal from a downstream breaker, thus minimizing the duration that the fault would exist before being cleared.

Zone selective interlocking is available for either ground fault only or both ground-fault and short-time functions. The zone selective interlocking feature requires a zone selective interlock module (ZSIM) for each zone. The module is an intermediate control device used between upstream and downstream circuit breaker to communicate with the short-time and ground-fault zone selective interlock functions of the MicroVersaTrip Plus and MicroVersaTrip PM trip units. The module (Cat. No. TIM1) requires 120/208/240 Vac control power, 15 VA maximum. The module can communicate with up to 30 downstream breakers and up to 6 upstream breakers provided all breakers share the same zone.

Multi-zone selective interlocking

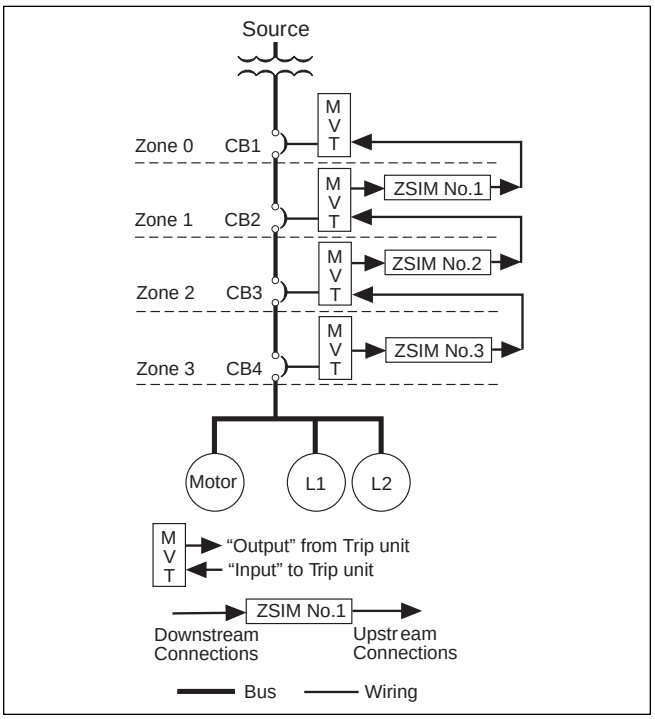

Operation Of MicroVersaTrip PM Trip Units
MicroVersaTrip PM trip units add communications capability with remote host computers and the GE POWER LEADER™ Power Management System. In addition, the user can choose to add metering with or without additional protective relaying. In the block diagram (page 23) of the MicroVersaTrip PM trip unit, note that there are two additional sets of inputs — voltage inputs from each phase and a 24 Vdc input from an external power supply. Additionally, there is a communications input/output link to the POWER LEADER system.

Voltage Inputs
Voltage Inputs to the MicroVersaTrip PM trip unit are required for both metering and protective relays. Voltage inputs require three delta or wye-connected potential transformers with 120 Vac secondaries, and an external voltage module that further conditions the voltage signals for use by the trip units microprocessor. A single set of external voltage modules can serve the requirements of up to 16 trip units.

+24 Vdc Input

MicroVersaTrip PM™ trip units require an external +24 Vdc auxiliary power supply to furnish power to the communication network. In addition, this power supply energizes the LCD display, so that low current values, voltage values and trip targets are displayed without use of the internal batteries. However, batteries are supplied with MicroVersaTrip PM trip units for cold set-ups and viewing targets in the event the +24 Vdc power supply is interrupted. A single +24 Vdc power supply can supply the power requirements of up to 30 MicroVersaTrip PM trip units.

Communications Output

The communications network uses a pair of shielded, twisted wires to connect individual devices to the POWER LEADER™ system. All communication network wiring within the breaker is prewired to dedicated secondary terminals.

Block diagram of MicroVersaTrip PM trip unit

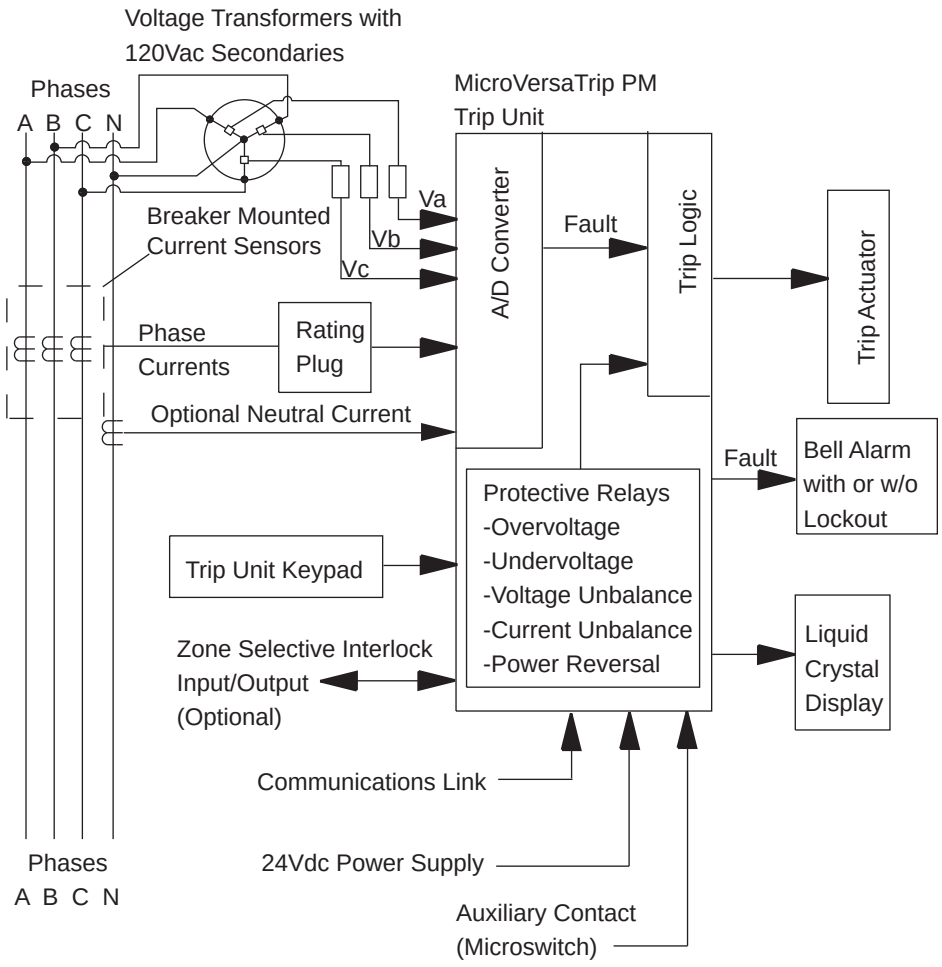

Metering

When the metering function is selected, a number of standard metering parameters can be viewed on the LCD display. All of these values are communicated to the POWER LEADER™ Power Management System. The accuracy of the metering functions is constrained by the physical size of the current sensors. Consequently, all metering functions are designed for load management decisions, and are not a substitute for utility revenue metering equipment.

- *Current:* MicroVersaTrip Plus™ and PM™, provide metering of individual phase currents. The user can view each phase current individually. Current displays automatically shift from amps to kiloamps above 999 amps. The minimum current display resolution is in tenths of an amp (e.g., 51.2 A).
- *Voltage:* The metering display of four wire systems can read both line-to-neutral and line-to-line voltages for each phase. The smallest resolution of the voltage display is one volt (e.g., 277V, or 276V).
- *Energy:* The energy display indicates the amount of real power that has passed through the breaker. The display has three-digit resolution, and automatically scales the display from kWh to MWh to GWh. Normal power flow can be selected as either line-load or load-line in the setup mode. Once normal flow is configured, energy values will accumulate in the positive direction. For certain applications where power may flow in either direction, such as tie breakers, energy may display a negative value.
- *Real power:* Real power in units of kW or MW, can be shown on command on the LCD display.
- *Volt-amperes (or total power):* "Total power" or volt-amperes in units of kVA or MVA can be viewed on command on the LCD display.
- *Demand:* Demand in units of kW or MW can be displayed. The monitoring time period can be varied from 5 to 60 minutes, in increments of 5 minutes. The display provides a rolling average of power over the scheduled time interval.
- *Peak demand:* Peak demand in units of kW or MW can be displayed. This value indicates the highest power demand reached since the start of demand measurements, or since reset. The peak demand value can be reset to the present demand via the keypad.

Protective Relaying

When protective relaying functions are selected, any combination of the following protective relays can be enabled. All relay functions combine both an adjustable setpoint and an adjustable discrete (not inverse) time delay. All time delays are adjustable from 1 to 15 seconds in increments of 1 second. All tripping is performed through the trip unit. Any protective relay trip will operate the bell alarm accessory if the breaker is so equipped.

- *Undervoltage:* Undervoltage protection may be set from 50% to 90% of the true rms nominal voltage in increments of 1%.
- *Overvoltage:* Overvoltage protection may be set from 110% to 150% of the true rms nominal voltage in increments of 1%.
- *Voltage unbalance:* Voltage-unbalance protection compares the lowest or highest phase voltage with the other two, and initiates a trip if the difference exceeds the setpoint. True rms voltages are computed for each phase. The range of trip settings varies from 10% to 50% in increments of 1%.
- *Current unbalance:* Current-unbalance protection compares the true rms current in either the highest or lowest phase with the true rms current in the other two phases. A trip is initiated if the difference exceeds the setpoint. The range of trip settings varies from 10% to 50% in increments of 1%.
- *Power reversal:* WavePro™ breakers may be set so that "positive" power flow can be in either direction (i.e., from line to load, or vice versa). Reverse power protection is set in units of kW. Reverse power setpoints vary from 10 kW to 990 kW in increments of 10 kW.
- *Enable/disable relays:* To disable any of the protective relay functions, set the time delay for that function to OFF. Setting the time delay to any discrete value enables the protective function.

Table 24.1 Trip Unit Metering Display Accuracy

Value	Breaker Full Scale Accuracy ①	System Full Scale Accuracy ②
Current, rms-A, kA	±2.0%	±2.0%
Voltage, rms-V Phase-Phase, Phase-Neutral	N/A	±1.5%
Energy-kWh, MWh, GWh	N/A	±3.5%
Demand-kW, MW	N/A	±3.5%
Peak demand-kW, MW	N/A	±3.5%
Real power-kW, MW	N/A	±3.5%
Total power-kVA, MVA	N/A	±3.5%
Frequency	N/A	±1Hz
Time delay	N/A	±1 sec

① Includes trip unit, breaker, current sensors and rating plug. Accuracy is based on loading range of 20% to 100% of breaker current sensor rating.

② Includes trip unit, breaker, current sensors, rating plug, plus Voltage Module (potential transformer, voltage conditioner). Accuracy is based on loading range of 20% to 100% of breaker current sensor rating.

Programming Trip Units

All MicroVersaTrip Plus™ and MicroVersaTrip PM™ trip units for WavePro™ breakers use the same programming keypads. All functions ordered are selectable and displayed.

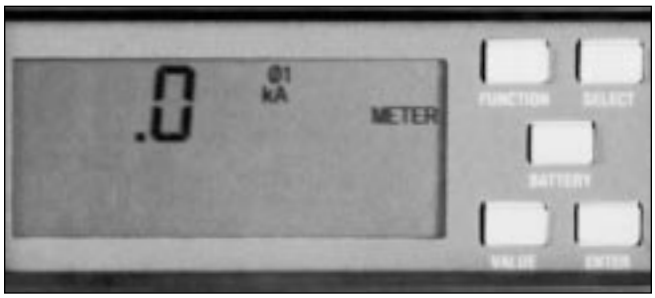

Programming display and keypad

- *Function:* Selects the mode of the display (Setup, Metering or Status).
- *Select:* Chooses the next item for display. All modes have a sequential menu that allows the user to step from one function to the next.
- *Battery:* Energizes the internal battery circuit and the LCD.
- *Value:* Allows changing a setpoint, or changes a metering display from line-to-line or line-to-neutral, or select between phases 1, 2 or 3.
- *Enter:* Stores setpoint in the trip unit's non-volatile memory.

Trip Targets - Overcurrent And Ground Fault

Trip targets for protective functions use international symbols, and are shown on the LCD when in the Status mode.

- *Normal:* When all protective circuits are within normal limits, the term "OK" is visible in the LCD display.
- *Long-time trip:* The long-time trip display moves through two transitions. As the current in any phase reaches 95% of its setpoint, the word "PICKUP" begins to flash. As current increases, flashing frequency increases, until 100% of the pickup point is reached. At that moment, PICKUP remains ON, continuously, until the long-time delay times out. Once the breaker has tripped on long time, the symbol "I>" appears in the LCD display to indicate a breaker overload. In addition to this target, the display indicates the trip status with the word, "FAULT." The display shows the type of trip "LT," the phase the fault occurred on, and the magnitude of the fault current. The trip information is displayed until cleared by the user.

Long-time trip imminent

Breaker tripped on long time

- *Short-time and instantaneous trips:* Short-time and instantaneous trips share the same trip target. The PICKUP target is not illuminated, since the time intervals between pickup and tripping are so short for either function. The trip target for a short-time or instantaneous trip is "I>>."

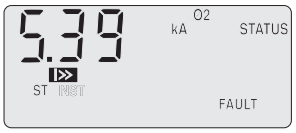

Breaker tripped on short time

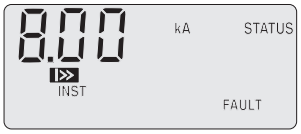

Breaker tripped on instantaneous

- *Ground-Fault Trip:* The trip target for a ground-fault trip is illumination of the letters "GF."

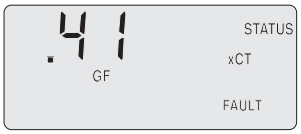

Breaker tripped on ground fault

Trip Operations Counter

The trip unit stores the number of trip operations for long-time, short-time, instantaneous and ground fault. Up to 256 counts of each trip operation are stored in memory. Manual reset through the keypad is possible at any time. The electronic trip operations counter does not store shunt trip, undervoltage release or protective relay trips. An optional mechanical operations counter is available that counts each open-and-close operation of the main contacts for any reason.

Display showing trip operations counter

Trip Targets - Protective Relays

Trip targets for the enabled protective relays appear in the status screen when they occur. Symbols used are:

- Undervoltage trip V<
- Overvoltage trip V>
- Voltage unbalance V
- Current unbalance I
- Power reversal ¦>

Rating Plugs

Interchangeable rating plugs are used in all of the MicroVersaTrip Plus™ and MicroVersaTrip PM™ trip units across the entire WavePro™ breaker product line. Rating plugs are the key devices that establish the current rating of the breaker. They provide an essential scaling function for the unit's microprocessor and ensure maximum accuracy. They also provide a jack for connection to an external battery pack or trip unit test kit.

Rating plugs have rejection features that allow them to be inserted only with breakers containing the correct current sensors. Rating plugs for the MicroVersaTrip Plus and MicroVersaTrip PM trip units cannot be used with Spectra RMS™ molded case circuit breakers, but are compatible with Power Break®, Power Break® II, and type AKR breakers with MicroVersaTrip Plus and MicroVersaTrip PM trip units. See Table 26.1 for available ratings.

Table 26.1 Breaker / Sensor / Rating Plug Combinations for MicroVersaTrip Plus / PM

Breaker Frame Rating (Amps)	Sensor Rating (CT)	Available Rating Plugs (I_n)
800	150	60, 80, 100, 125, 150
800	400	150, 200, 225, 250, 300, 400
800/1600	800	300, 400, 450, 500, 600, 700, 800
1600	1600	600, 800, 1000, 1100, 1200, 1600
2000	2000	750, 800, 1000, 1200, 1500, 1600, 2000
3200	3200	1200, 1600, 2400, 3200
4000	4000	1600, 2000, 2500, 3000, 3600, 4000
5000	5000	3200, 4000, 5000

Current Sensors

Toroidally wound current sensors are furnished for all major protective functions, and for use with MicroVersaTrip Plus and PM metering functions. Current sensors are factory installed. There are nine current sensor ratings for the WavePro breaker line through 5000 amps. See Table 26.1 for current ratings. Rating plugs must be coordinated with the current sensor rating (CT) listed on the face of the rating plug.

Typical toroidally wound current sensor

Bell Alarm

Activation of the Bell Alarm is controlled by the trip unit. All protective function trips initiated by the trip unit will cause the bell alarm (if so equipped) to operate. Reset of the bell alarm contacts and the mechanical lockout (if provided) is by way of the reset button on the breaker escutcheon.

Table 27.1 MicroVersaTrip Plus™ / PM™ trip unit catalog numbers

K 3 32 LSI GD Z1 PM R

Code	Description	Function
K	WavePro	Breaker Family
8	800A	Frame Size
1	1600A	
2	2000A	
3	3200A	
4	4000A	
5	5000A	
01	150A	Installed CT
04	400A	
08	800A	
16	1600A	
20	2000A	
32	3200A	
40	4000A	
50	5000A	
L	Long-time	Overcurrent Protection
S	Short-time	
I	Instantaneous	
G	Ground Fault	Ground Fault Protection
GD	Ground Fault (user defeatable)	
Z1	GF Zone-Selective Interlock	Optional Protection
Z2	GF & ST Zone-Selective Interlock	
X	Switchable Inst, ST, and GF	
P	Protective Relays & Comm	Optional Features
M	Metering & Comm	
R	Replacement unit	Ordered as Replacement

Table 27.2 Power+™ trip unit catalog numbers

J 3 32 LSI T1 R

Code	Description	Function
J	WavePro	Breaker Family
8	800A	Breaker Frames
1	1600A	
2	2000A	
3	3200A	
4	4000A	
01	150A	Installed CT
04	400A	
08	800A	
16	1600A	
20	2000A	
32	3200A	
40	4000A	
L	Long-time	Overcurrent Protection
S	Short-time	
I	Instantaneous	
(none)	TARGET00 (blank insert)	Target Module Installed
T1	TARGET01 (w/o ground fault)	
T2	TARGET02 (with ground fault)	
R	Replacement unit	Ordered as Replacement

Table 27.3 WavePro™ Breaker Power+ and MicroVersaTrip Plus / PM Rating Plug Catalog Numbers

Breaker Frame Size (Amps)	Current Sensor (Amps)	Rating Plug (Amps)	Power+ Rating Plug w/o GF	Power+ Rating Plug with GF	Power+ Rating Plug with Defeatable GF	MicroVersaTrip Plus/PM Rating Plug
800	150	60	N/A	N/A	N/A	TR1B60
		80	TR1C80	TR1C80GF	TR1C80GFD	TR1B80
		100	TR1C100	TR1C100GF	TR1C100GFD	TR1B100
		125	TR1C125	TR1C125GF	TR1C125GFD	TR1B125
		150	TR1C150	TR1C150GF	TR1C150GFD	TR1B150
	400	150	N/A	N/A	N/A	TR4B150
		200	TR4C200	TR4C200GF	TR4C200GFD	TR4B200
		225	TR4C225	TR4C225GF	TR4C225GFD	TR4B225
		250	TR4C250	TR4C250GF	TR4C250GFD	TR4B250
		300	TR4C300	TR4C300GF	TR4C300GFD	TR4B300
		400	TR4C400	TR4C400GF	TR4C400GFD	TR4B400
	800	300	N/A	N/A	N/A	TR8B300
		400	TR8C400	TR8C400GF	TR8C400GFD	TR8B400
		450	N/A	N/A	N/A	TR8B450
		500	TR8C500	TR8C500GF	TR8C500GFD	TR8B500
		600	TR8C600	TR8C600GF	TR8C600GFD	TR8B600
		700	TR8C700	TR8C700GF	TR8C700GFD	TR8B700
		800	TR8C800	TR8C800GF	TR8C800GFD	TR8B800
1600	800	300	N/A	N/A	N/A	TR8B300
		400	TR8C400	TR8C400GF	TR8C400GFD	TR8B400
		450	N/A	N/A	N/A	TR8B450
		500	TR8C500	TR8C500GF	TR8C500GFD	TR8B500
		600	TR8C600	TR8C600GF	TR8C600GFD	TR8B600
		700	TR8C700	TR8C700GF	TR8C700GFD	TR8B700
		800	TR8C800	TR8C800GF	TR8C800GFD	TR8B800
	1600	600	N/A	N/A	N/A	TR16B600
		800	TR16C800	TR16C800GF	TR16C800GFD	TR16B800
		1000	TR16C1000	TR16C1000GF	TR16C1000GFD	TR16B1000
		1100	N/A	N/A	N/A	TR16B1100
		1200	TR16C1200	TR16C1200GF	TR16C1200GFD	TR16B1200
		1600	TR16C1600	TR16C1600GF	TR16C1600GFD	TR16B1600
2000	2000	750	N/A	N/A	N/A	TR20B750
		800	N/A	N/A	N/A	TR20B800
		1000	TR20C1000	TR20C1000GF	TR20C1000GFD	TR20B1000
		1200	TR20C1200	TR20C1200GF	TR20C1200GFD	TR20B1200
		1500	N/A	N/A	N/A	TR20B1500
		1600	TR20C1600	TR20C1600GF	TR20C1600GFD	TR20B1600
		2000	TR20C2000	TR20C2000GF	TR20C2000GFD	TR20B2000
3200	3200	1200	TR32C1200	TR32C1200GF	TR32C1200GFD	TR32B1200
		1600	TR32C1600	TR32C1600GF	TR32C1600GFD	TR32B1600
		2400	TR32C2400	TR32C2400GF	TR32C2400GFD	TR32B2400
		3200	TR32C3200	TR32C3200GF	TR32C3200GFD	TR32B3200
4000	4000	1600	TR40C1600	TR40C1600GF	TR40C1600GFD	TR40B1600
		2000	TR40C2000	TR40C2000GF	TR40C2000GFD	TR40B2000
		2500	TR40C2500	TR40C2500GF	TR40C2500GFD	TR40B2500
		3000	TR40C3000	TR40C3000GF	TR40C3000GFD	TR40B3000
		3600	N/A	N/A	N/A	TR40B3600
		4000	TR40C4000	TR40C4000GF	TR40C4000GFD	TR40B4000
5000	5000	3200	N/A	N/A	N/A	TR50B3200
		4000	N/A	N/A	N/A	TR50B4000
		5000	N/A	N/A	N/A	TR50B5000

Equipment Usage | Frame Sizes & Interrupting Rating | Trip Unit Type, Characteristics & Trip Rating

W	E	2	D	A	Q	D
1	2	3	4	5	6	7

Usage	Code
AKD10/PBII/AV3 Access Equipment	WE
OEM Equipment (Substructure Based)	WS

Interrupting Capability/ Fuse Type		Code
Standard	(ex. WPS)	1
High	(ex. WPH)	2
Extended	(ex. WPX)	3
OFLO only		4
300A	Class "J" fuse	A
350A	Class "J" fuse	B
400A	Class "J" fuse	C
450A	Class "J" fuse	D
500A	Class "J" fuse	E
600A	Class "J" fuse	F
800A	Class "L" fuse	G
1000A	Class "L" fuse	H
1200A	Class "L" fuse	J
1600A	Class "L" fuse	K
2000A	Class "L" fuse	L
2500A	Silver "L" fuse	M
800A	"Welder" limiter	N
1200A	"Welder" limiter	P
1600A	"Welder" limiter	Q
2000A	"Welder" limiter	R

Trip Unit type	Code
none (non-automatic)	X
MVT Plus	A
MVT M (metering & communications)	B
MVT PM (relaying, metering & communications)	C
Power + ①	G
Power + (w/GF) ① ③	H
Power + (w/Defeatable GF) ① ② ③	J
Power + (w/targets) ①	K
Power + (w/targets & GF) ① ③	L
Power + (w/targets & Defeatable GF) ① ② ③	M

① *Power + is not available for 5000A frame breakers*
② *Not UL Listed* ③ *GF is 3w/4w (See Note 1 below)*

Trip unit codes (See Table A)

TU function	Code	TU function	Code
none	X	LIGDZ1 ① ③	N
LS ②	A	LSI ②	P
LSG ③	B	LSIG ③	Q
LSGZ1 ③	C	LSIGX ① ③	R
LSGZ2 ③	D	LSIGZ1 ③	S
LSGD ① ③	E	LSIGZ2 ③	T
LSGDZ1 ① ③	F	LSIGD ① ③	V
LSGDZ2 ① ③	G	LSIGDZ1 ① ③	W
LI②	J	LSIGDZ2 ① ③	Y
LIG ③	K		
LIGZ1 ③	L		
LIGD ① ③	M		

① *Not UL Listed*
② *Power+ available with LI, LS or LSI only*
③ *GF is 3w/4w (See Note 1 below)*

Frame	&	Sensor	Code (See Note 1)
800		none	A
		150	B
		400	C
		800	D
1600		none	E
		800	F
		1600	G
2000		none	H
		2000	J
3200		none	K
		3200	L
4000		none	M
		4000	N
5000		none	P
		5000	R

Rating Sensor	Rating Plug	Code
	none	X
150	60 ①	1
	80	2
	100	3
	125	4
	150	5
400	150 ①	5
	200	6
	225	7
	250	8
	300	9
	400	A
800	300 ①	9
	400	A
	450 ①	B
	500	C

Rating Sensor	Rating Plug	Code
800	600	D
	700	E
	800	G
1600	600 ①	D
	800	G
	1000	H
	1100 ①	J
	1200	K
	1600	M
2000	750 ①	F
	800 ①	G
	1000	H
	1200	K
	1500 ①	L
	1600	M
	2000	N

Rating Sensor	Rating Plug	Code
3200	1200	K
	1600	M
	2400	P
	3200	S
4000	1600	M
	2000	N
	2500	Q
	3000	R
	3600 ①	T
	4000	V
5000	3200 ①	S
	4000 ①	V
	5000 ①	W

① *Rating plug value not available on Power+ trip unit*

Note 1: If 4 wire GF is required then the "A-Disc" [character position 14] must be selected and the 4th wire (neutral) sensor must be ordered separately. Refer to DEP-080 Product Catalog.

Sensor = "none" for non-automatic breakers

Table A

L = Long Time (LT)
S = Short Time (ST)
I = Instantaneous (Inst)
G = Ground Fault (GF)
GD = Defeatable GF
X = Switchable ST or Inst and GF
Z1 = Zone Selective Interlocking—GF
Z2 = Zone Selective Interlocking—GF and ST

Breaker Operation & Control Voltages

Breaker Mounted Accessories

F	1	X	B	B	X	Q	X
8	9	10	11	12	13	14	15

Operation Charge & Close	Code
manual	X
manual with remote close ①	
Close voltage	
120v-60Hz	1
240v-60Hz	3
120v-50Hz	4
240v-50Hz	6
48v -DC	A
110v-DC	B
125v-DC	C
250v-DC	D
electrical ①	
Charge / Close	
48v-DC	E
120v-60Hz	F
120v-50Hz	H
120v-50/60/48v-DC	N
110v-DC	P
125v-DC	Q
250v-DC	R
240v-60Hz	T
240v-50Hz	W

① *(Requires min 4 stage auxiliary switch and shunt trip)*

Accessory	Code
none	X
Aux switch 4 stages	A
Aux switch 7 stages	B

Accessory	Code
none	X
Bell alarm	A
Bell alarm with lockout	B

Accessory	Code
none	X
Shunt Trip-2 (Not available on WPS-50)	n (See "Shunt Trip-1" codes—only those marked ① are available for 2nd shunt trip)

Future use

Shunt Trip-1	Code		Code
none	X	24VDC ①	B
120VAC, 60Hz ①	1	48VDC	D
208VAC, 60Hz	2	110 / 125VDC ①	E
240VAC, 60Hz ①	3	250VDC ①	F
70VAC, 60Hz	4		
120VAC, 50Hz	5		
208VAC, 50Hz	6		
240VAC, 50Hz	7		
12VDC	A		

① Coil ratings available for Shunt Trip-1 or Shunt Trip-2. All other ratings apply to Shunt Trip-1 only.

Undervoltage (UV) or Electric Lockout (ELO) *(See Note 2 Below)*	Code		
	UV	UV w/TD	ELO
none	X	X	X
120V-50/60Hz	1		4
208V-50/60Hz		3 (TAKYUVT-3)	
240V-50/60Hz	2	3 (TAKYUVT-3)	5
24VDC	A		G
48VDC	B		H
110VDC	C		J
125VDC	C	E (TAKYUVT-1)	J
250VDC	D	F (TAKYUVT-2)	K

Note 2: Order Static Time Delay Unit (TAKYUVT-1,2,3) separately

"A - Disc" *(See Note 3 Below)*	Hidden Close PB (E/O only)	Operation Counter	Remote Charge Indicator (E/O only)	Code
No	No	No	No	X
No	No	No	Yes	A
No	No	Yes	No	B
No	No	Yes	Yes	C
No	Yes	No	No	D
No	Yes	No	Yes	E
No	Yes	Yes	No	F
No	Yes	Yes	Yes	G
Yes	No	No	No	H
Yes	No	No	Yes	J
Yes	No	Yes	No	K
Yes	No	Yes	Yes	L
Yes	Yes	No	No	M
Yes	Yes	No	Yes	N
Yes	Yes	Yes	No	P
Yes	Yes	Yes	Yes	Q

Note 3: "A-Disconnect" (A-Disc) — the 36 point A-Disc is automatically supplied whenever any of the following accessories/features are ordered: zone selective interlock, shunt trip, auxiliary switch, bell alarm, undervoltage, electric lockout, E/O, MVT PM. Select the A-Disc if 4-wire GF is required or if a breaker is to be "PM Ready" and none of the above accessories/features are ordered. "PM Ready" wiring includes inputs for 24vDC auxiliary power, communications, and 3 phase voltage.

NOTES:

(1) BREAKER SHOWN IN THE OPEN POSITION WITH THE CLOSING SPRINGS DISCHARGED, BELL ALARM RESET.
(2) THIS DRAWING SHOWS ELECTRICAL CONNECTIONS ONLY. THE EXACT LOCATION OF COMPONENTS CANNOT BE DETERMINED FROM THIS DRAWING.
(3) THIS DRAWING DEPICTS STANDARD WIRING DIAGRAM ONLY.
(4) DEFINITIONS: E/O-ELECTRICALLY OPERATED CIRCUIT BREAKER; M/O-MANUALLY OPERATED CIRCUIT BREAKER.
(5) M/O BKRS WITH REMOTE CLOSE OPTION (WITH ONE SHUNT TRIP DEVICE) AND ALL E/O (WITH ONE SHUNT TRIP DEVICE ONLY) REQUIRE A 4-STAGE (MINIMUM) AUXILIARY SWITCH.
(6) TWO SHUNT TRIP DEVICES REQUIRE A 7-STAGE AUXILIARY SWITCH.
(7) A SECOND SHUNT DEVICE IS NOT AVAILABLE FOR WPS-50 TYPE BREAKERS.
(8) THE FOLLOWING DEVICES ARE NOT APPLICABLE ON BKRS SUPPLIED WITH A POWER+™ TRIP UNIT; T/(COMM), T/(ZSI), T/(VC), AND T/(CP).
(9) THE FOLLOWING DEVICES ARE NOT APPLICABLE ON BKRS SUPPLIED WITH A MICROVERSATRIP PLUS™ TRIP UNIT: T/(COMM), AND T/(VC).
(10) RESISTOR PROVIDED FOR AC CLOSE ONLY 1KOHM/25WATT FOR 120VAC, 4KOHM/25WATT FOR 240VAC.

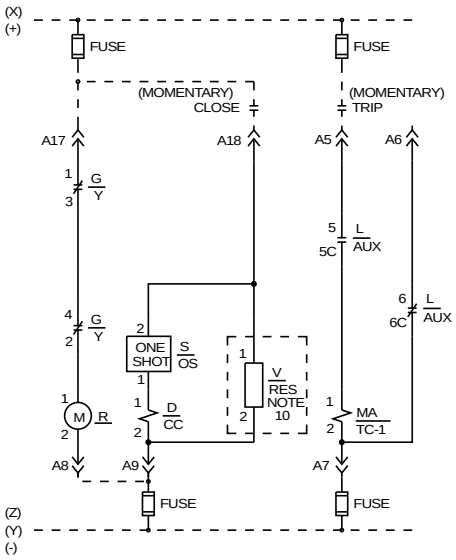

WAVEPRO CIRCUIT BREAKER
ELECTRICALLY OPERATED

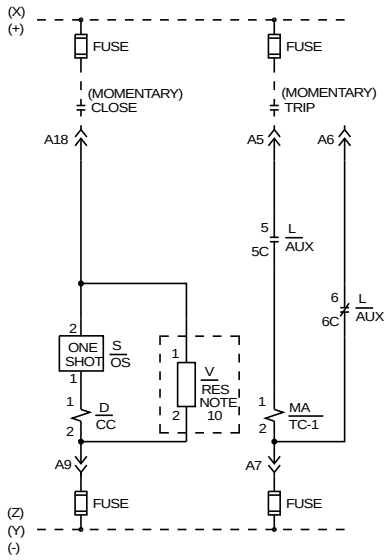

WAVEPRO CIRCUIT BREAKER
MANUALLY OPERATED
(SHOWN WITH OPTIONAL REMOTE CLOSE
DEVICE AND SHUNT TRIP DEVICE)

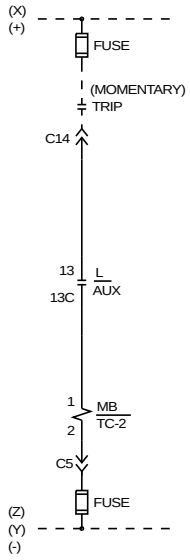

WAVEPRO CIRCUIT BREAKER
ELEC. & MAN. OPERATED
(OPTIONAL SECOND SHUNT TRIP DEVICE)

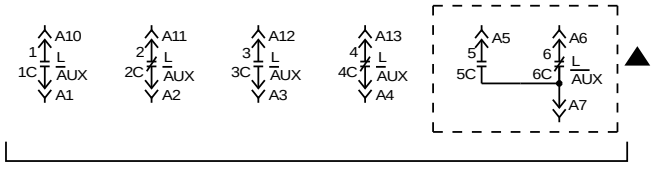

4-STAGE AUXILIARY SWITCH CONTACTS
▲ - CONTACT NOT AVAILABLE WITH FIRST SHUNT TRIP DEVICE OPTION.

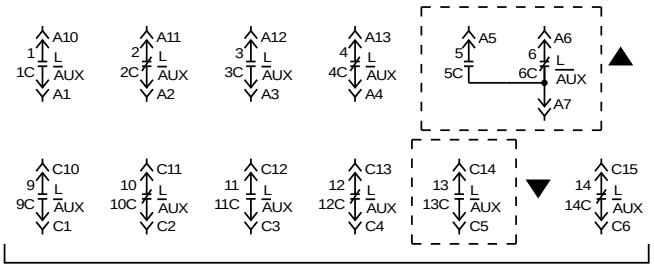

7-STAGE AUXILIARY SWITCH CONTACTS
▲ - CONTACT NOT AVAILABLE WITH FIRST SHUNT TRIP DEVICE OPTION.
▼ - CONTACT NOT AVAILABLE WITH SECOND SHUNT TRIP DEVICE OPTION.

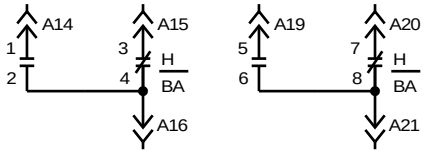

BELL ALARM CONTACTS
(SHOWN WITH OR WITHOUT
LOCKOUT OPTION)

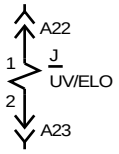

UNDERVOLTAGE OR
ELECTRIC LOCKOUT

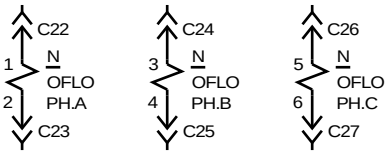

OPEN FUSE LOCKOUT
(WPS-20, WPS-32, WPS-40,
& WPS-50 FRAMES ONLY)

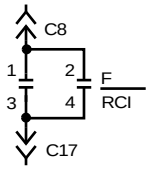

REMOTE CHARGE
INDICATOR
WPS/H-32, WPS-40, WPS-50
E/O BKRS ONLY).

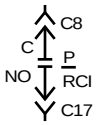

REMOTE CHARGE
INDICATOR
(WPS/H/X/F-08, WPS/H/F-16,
WPS-20; E/O BKRS ONLY).

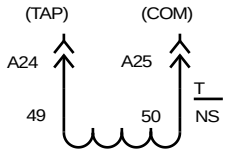

TRIP UNIT
NEUTRAL SENSOR
INPUT

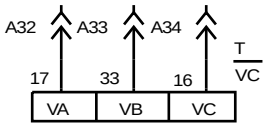

TRIP UNIT
VOLTAGE CONDITIONER
INPUT
(MVT PM & "PM READY" ONLY)

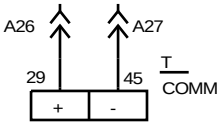

TRIP UNIT
COMMUNICATAION
INPUT
(MVT PM & "PM READY" ONLY)

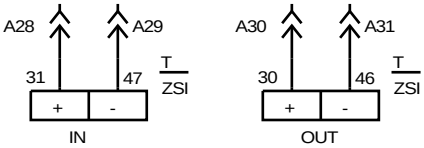

TRIP UNIT
ZONE SELECTIVE
INTERLOCKING INPUT/OUTPUT
(MVT PM & "PM READY" ONLY)

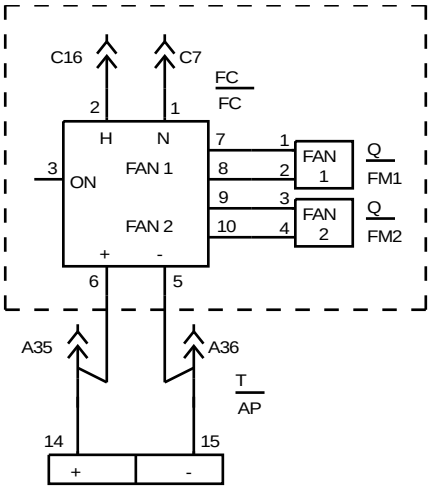

FANS & FAN CONTROL
(WPS-50 BKRS ONLY)

TRIP UNIT
24VDC AUXILIARY
POWER INPUT
(MVT PM & "PM READY" ONLY)

DRAWING NO. 10057403P1
THIS DRAWING SHOWS ALL AVAILABLE BREAKER ACCESSORIES. REFER TO BREAKER CATALOG NUMBER FOR ACCESSORIES INCLUDED WITH THE BREAKER.

Weights of WavePro™ drawout low voltage power circuit breakers and associated drawout fuse carriages (fuse roll-out element) are shown in Table 32.1.

Table 32.1 WavePro breaker and fuse roll-out weights

Device	Net Weight, lb. [kg]	
	Manual	Electrical
WPS / WPH / WPX-08	200 [91]	205 [93]
WPF-08	245 [112]	250 [114]
WPS / WPH-16	210 [96]	215 [98]
WPF-16	255 [116]	260 [118]
WPS-20	220 [100]	225 [102]
WPS / WPH-32	475 [216]	485 [221]
WPS-40	535 [243]	545 [248]
WPS-50	575 [262]	585 [266]
2000/3200A Fuse Roll-out	250 [114]	—
4000A Fuse Roll-out	400 [182]	—
5000A Fuse Roll-out	450 [205]	—

Table 32.2 shows the minimum and maximum fuse ratings allowed for WavePro breakers based on the breaker frame size and rating plug. Maximum fuse ratings protect the circuit breaker under short circuit conditions with up to 200kA available. Minimum fuse sizes are established based on UL continuous current tests when the fuse is mounted on the circuit breaker.

Table 32.2 Allowable current limiting fuse sizes for WavePro low voltage power circuit breakers

Breaker Type	Frame Size	Sensor Rating	Rating Plug	Gould-Shawmut Fuse Range ①
WPF-08	800A	150A	Below 150A	300 / 350 / 400 / 450 / 500 / 600 / 800* / 1000* / 1200* / 1600*A
			150A	
			225A	
			300A	
		400A	400A	400 / 450 / 500 / 600 / 800* / 1000* / 1200* / 1600*A
			600A	600 / 800* / 1000* / 1200* / 1600*A
			700A	800* / 1000* / 1200* / 1600*A
		800A	800A	1000* / 1200* / 1600*A
WPF-16	1600A	800A	400A and below	450 / 500 / 600 / 800* / 1000* / 1200* / 1600* / 2000* / 2500A
			500A	500 / 600 / 800* / 1000* / 1200* / 1600* / 2000* / 2500A
			600A	600 / 800* / 1000* / 1200* / 1600* / 2000* / 2500A
			700A	800* / 1000* / 1200* / 1600* / 2000* / 2500A
			800A	
			1000A	1000* / 1200* / 1600* / 2000* / 2500A
			1200A	1600* / 2000* / 2500A
		1600A	1600A	2500A
WPS-20 ②	2000A	2000A	2000A and below	2000 / 2500A
WPS-32 ②	3200A	3200A	3200A and below	2000 / 2500 / 3000 / 4000A
WPS-40 ②	4000A	4000A	4000A and below	2000 / 2500 / 3000 / 4000 / 5000A
WPS-50 ②	5000A	5000A	5000A and below	

* These fuse sizes are also available as "Welder Limiters."

① Class L fuses less than 800A are not UL or CSA listed. Use Class J fuses for 600A and below.

② Fuses are mounted in a separate roll-out element (fuses shipped as "XS" material).

WavePro™ low voltage power circuit breakers have been tested with Gould-Shawmut current limiting fuses. Table 33.1 lists the catalog numbers of the fuses used on the circuit breakers (integrally fused) and in separately mounted fuse roll-out elements.

Table 33.1 WavePro current limiting fuse catalog numbers

Fuse Ratings	Gould-Shawmut Fuse Catalog Number
Breaker Mounted Fuses	
300A - J	A4J300
400A - J	A4J400
450A - J	A4J450
500A - J	A4J500
600A - J	A4J600
800A - L	A4BY800
1000A - L	A4BY1000BG
1200A - L	A4BY1200BG
1600A - L	A4BY1600BG
2000A - L	A4BY2000
2500A -L (Silver)	A4BQ2500GE
Fuses for Roll-out Elements	
2000A - L	A4BY2000-55BA
2500A - L	A4BY2500-55BA
3000A-L	A4BY3000-55BA
4000A - L	A4BY4000-55BA
5000A - L	A4BY5000-55BA
Welder Limiters	
800A	A4BX800
1000A	A4BX1000BG
1200A	A4BX1200BG
1600A	A4BX1600BG
2000A	A4BX2000

Suffix BG provides notched blade rejection
Suffix GE provides offset blade for breaker mounting
Suffix 55BA provides milled blade rejection

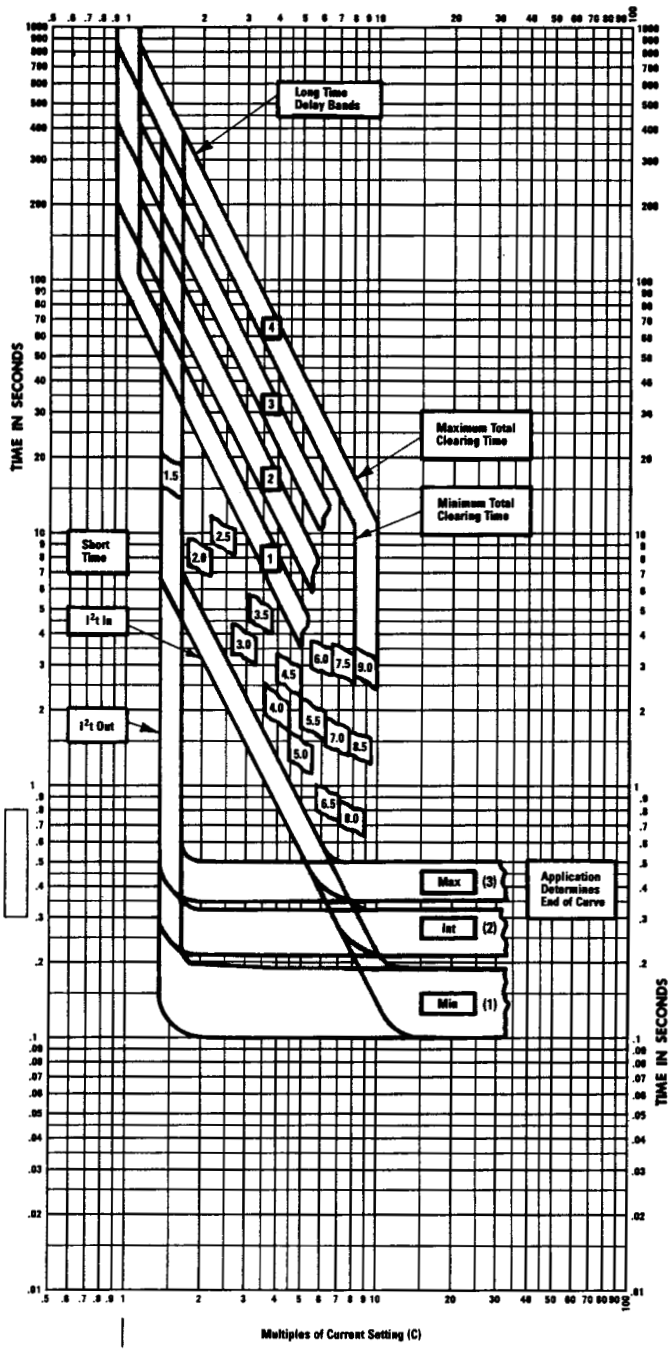

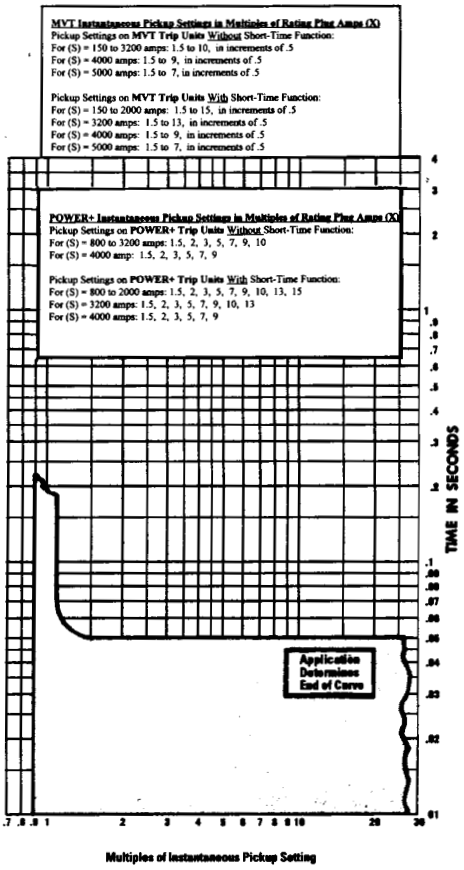

GE Electrical Distribution & Control

General Electric Company
41 Woodford Avenue, Plainville, CT 06062

Low Voltage Power Circuit Breakers

Type WavePro™

with Enhanced MicroVersaTrip Plus™, MicroVersaTrip PM™ (Series RMS-9D) or Power+™ Digital RMS Trip Units

Long Time Delay, Short Time Delay and Instantaneous Time-Current Curves

Curves apply at 50 to 400 Hertz and from -20°C to +55°C breaker ambient.

Instantaneous function: • See table and curve above

Settings Glossary
S = Current Sensor Rating in amps
C = Current Setting in amps
X = Rating Plug Rating in amps
H = Breaker Short-time Ampere Rating

Note: Operation above 60 Hertz requires thermal and interrupting derating of the circuit breaker.

Available Ratings (Amperes)

Breaker Type	Breaker Model	Breaker Frame	Current Sensor (S)	Rating Plug (X)
LVPCB	WP08	800	150	60*, 80, 100, 125, 150
			400	150*, 200, 225, 250, 300, 400
			800	300*, 400, 500, 600, 700, 800
	WP16	1600	800	300*, 400, 500, 600, 700, 800
			1600	600*, 800*, 1000, 1200, 1600
	WP20	2000	2000	800*, 1000, 1200, 1600, 2000
	WP32	3200	3200	1200, 1600, 2400, 3200
	WP40	4000	4000	1600, 2000, 2500, 3000, 4000
	WP50*	5000	5000	3200, 4000, 5000

** Not available for Power+™*

Voltage Rating: 600 volts ac, maximum

DES-001

MicroVersaTrip Plus & PM Adjustments

Long-time function:
- Current settings (C): .5 to 1.1 in .05 increments and are multiples of rating plug amps (X)
  Delay Bands: 1, 2, 3 and 4

Short-time function:
- Pickup settings: 1.5 to 9.0 in .5 increments and are multiples of current setting (C)
  Delay Bands (I²t In & Out): 1=Min, 2=Int, 3=Max

Power+ Adjustments

Long-time function:
- Current settings (C): .5, .6, .7, .8, .9, .95, 1, 1.1 and are multiples of rating plug amps (X)
  Delay Bands: 1, 2, 3 and 4

Short-time function:
- Pickup settings: 1.5, 2, 2.5, 3, 4, 5, 7, 9 and are multiples of current setting (C)
  Delay Bands (I²t In & Out): Min, Int, Max

9/97BM

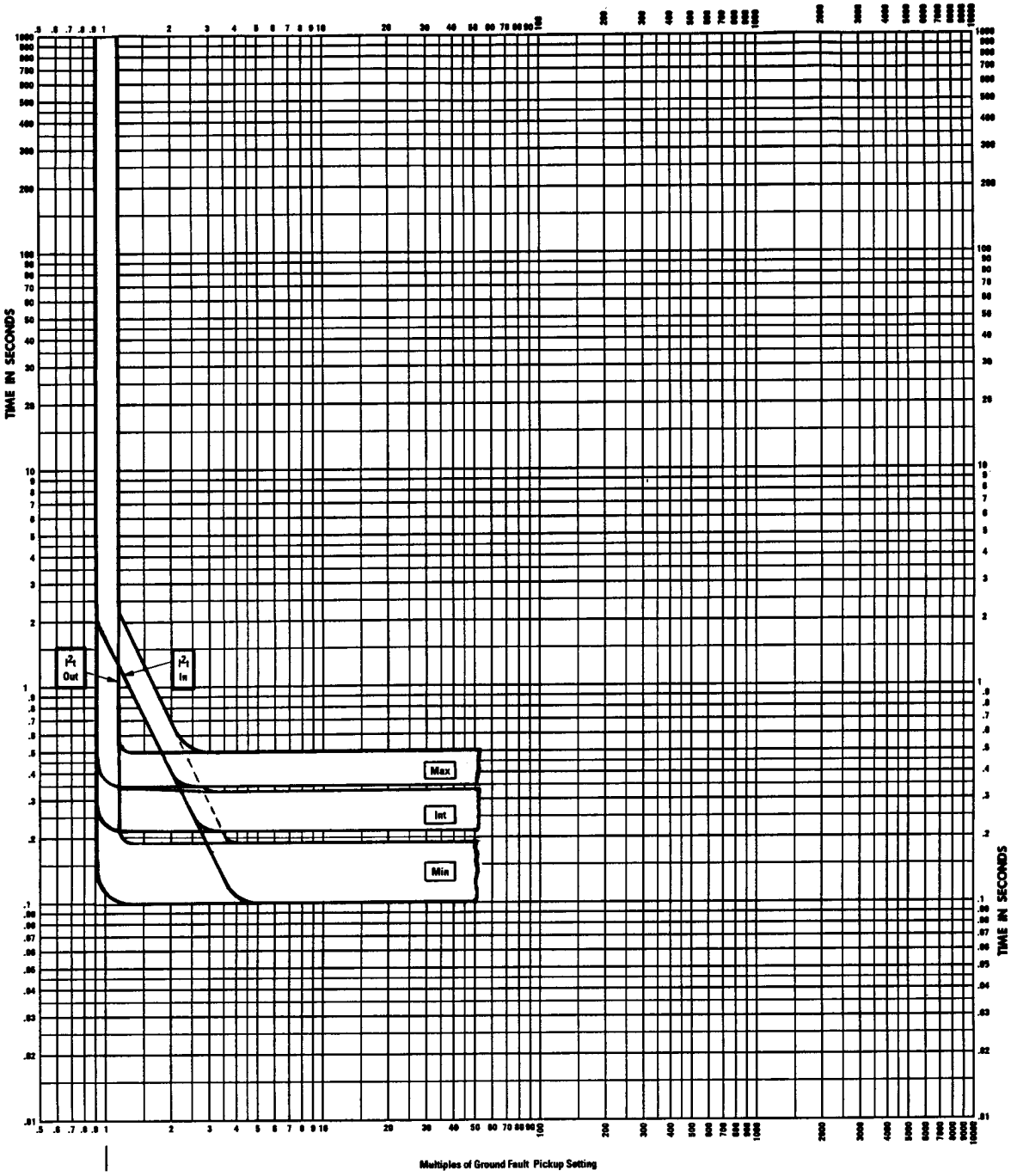

GE Electrical Distribution & Control

General Electric Company
41 Woodford Avenue, Plainville, CT 06062

Available Ratings (Amperes)

Breaker			Current
Type	Model	Frame	Sensor (S)
LVPCB	WP08	800	150, 400, 800
	WP16	1600	800, 1600
	WP20	2000	2000
	WP32	3200	3200
	WP40	4000	4000
	WP50	5000	5000

Voltage Rating: 600 volts ac, maximum

Low Voltage Power Circuit Breakers

Type WavePro™

with Enhanced MicroVersaTrip Plus™, MicroVersaTrip PM™ (Series RMS-9D) or Power+™ Digital RMS Trip Units

Ground Fault Time-Current Curves

Curves apply at 50 to 400 Hertz and from -20°C to +55°C breaker ambient.

Settings Glossary
S = Current Sensor Rating in amps

Note: Operation above 60 Hertz requires thermal and interrupting derating of the circuit breaker.

DES-002

MicroVersaTrip Plus & PM Adjustments

Ground Fault function: Pickup settings (PS) are in multiples of Current Sensor Rating (S)

(S) in Amps	PS Multiplier
150 to 2000	.2 to .6
2500 to 3200	.2 to .37
4000	.2 to .3
5000	.2 to .24

Delay Bands (I^2t In & Out): 1=Min, 2=Int, 3=Max

Power+ Adjustments

Ground Fault function: (PS) are in multiples of (S)

(S) in Amps	PS Multiplier
150 to 2000	.2 to .6
3200	.2 to .37
4000	.2 to .3

Delay Bands (I^2t In & Out): Min, Int, Max

9/97BM

WavePro™ Breaker Testing
WavePro Low Voltage Power Circuit Breakers are designed and tested in accordance with ANSI Standards C37.13, C37.16, C37.17 and C37.50, and are UL Listed in accordance with UL 1066. WavePro breakers are designed and tested to meet or exceed these standards.

The following information briefly describes the types of tests WavePro low voltage power circuit breakers, rated 800 through 5000 amperes, must successfully pass (ref. ANSI C37.50).

Trip Device Calibration Check Test: Long time, short time and instantaneous functions are checked to be in accordance with the trip time curves.

AC Dielectric Withstand Voltage Test: The breaker must withstand applied voltage of 2200 volts on the primary circuits and 1500 volts on the secondary circuits for one minute.

The Trip Device Calibration Check Test and the AC Dielectric Withstand Voltage Test as described above are performed both before and after each sequence of tests as part of the acceptance criteria. The dielectric test voltage is reduced to 60% of the above test values when the dielectric test is performed after a test sequence.

The required five test sequences include:
Continuous Current Test: Rated current is passed through the breaker which is in an enclosure. After temperatures have stabilized, the temperature rise on insulating parts and conducting parts of the breaker must not exceed values prescribed in ANSI C37.13.

Overload Switching Test: 50 operations of making and breaking six times rated current at rated maximum voltage for 800A frame size (38 operations for 1600A and 2000A frames). The Overload Switching Test is conducted in a metal enclosure representing the minimum size enclosure for which the breaker is suitable. No electrical or mechanical breakdown is permitted.

Short Circuit Current Tests: Single-pole and three-pole tests are performed on the breakers to determine their ability to close, carry and interrupt currents within their ratings. The tests are conducted at rated maximum voltage, in a series of “open” (O) and “close-open” (CO) operations.

Endurance Tests: The breaker must complete an endurance test of (1) making and breaking rated current at rated maximum voltage, and (2) additional no load (mechanical) on-off operations per Table 36.1.

Table 36.1 Endurance requirements for low voltage AC power circuit breakers

Frame Size (amps)	Number of Make-Break or Close-Open operations			
	Between servicing	Electrical endurance	Mechanical endurance	Total operations
800	1750	2800	9700	12500
1600	500	800	3200	4000
2000	500	800	3200	4000
3200	250	400	1100	1500
4000	250	400	1100	1500
5000	250	400	1100	1500

Short Time Current Test: Breakers are tested under the same conditions as the three-pole short circuit test. This test sequence checks the breaker’s ability to perform the short time current duty cycle at its rated short time current at rated maximum voltage. The direct acting trip devices are disabled for this test. The duty cycle of this test consists of two periods of ½ second each, with a 15 second interval of zero current between the ½ second periods.

Fused Circuit Breaker Tests: Additional continuous current and short circuit tests are performed on fused breakers. Short circuit tests on fused breakers are performed at 600 volts with a maximum power factor of 20%.

GE Trip Unit Testing
GE has developed a qualification test plan for the Power+™, MicroVersaTrip Plus™ and MicroVersaTrip PM™ trip units that is in addition to the tests required by UL 1066 and ANSI C37.17. The objective is to demonstrate performance and reliability under severe operating conditions. Essential components of the internal qualification test are:

1. *Temperature Cycling.* This test verifies that units are not damaged when exposed to many extreme thermal cycles. The test consists of ramping units from -20°C to 70°C a minimum of 10 times each. Units are soaked at each extreme temperature for 1 hour minimum for each cycle.

2. *Storage Temperature.* This test ensures that units will operate properly following exposure to extreme storage temperatures for 72 hours. Units are stored in an unpowered state at -55°C and +85°C for 72 hours and then subjected to functional testing to verify proper operation.

3. *Voltage Surge.* This test ensures that the circuit breaker is not susceptible to direct and coupled surge voltages on any primary line or any control input or output line. The test is performed per the ANSI C37.90.1 Surge Withstand Capability specification on all input and

output lines connected to the breaker. Both fast transient and oscillatory surges are applied.

4. *RF and EMI.* These tests ensure that the breaker and trip unit are not susceptible to radiated electromagnetic fields. The test is performed per the ANSI C37.90.2 Radiated Field Immunity specification. The breaker is subjected to a modulated field of 20-50V/m from 20 MHz to 1 GHz with the field polarization applied vertically and horizontally.

5. *Walkie-Talkie Immunity.* The breaker is subjected to a number of standard types of industrial walkie-talkies to ensure that it is immune to nuisance trips or improper operation when nearby walkie-talkies are used.

6. *Wiggins Immunity.* Tests are performed to ensure the breaker will not nuisance trip when exposed to a high inductive load (Wiggy) voltage tester across the energized phase lines.

7. *Humidity.* A number of units are exposed to high-humidity environments of 95% relative humidity for a period of one week to simulate severe environmental conditions.

8. *Dust.* Units are subjected to severe atmospheric dust environments per MIL-STD-810E, Method 510.3, Proc. I. No dust build-up behind the display window is permitted.

9. *Salt Spray.* Units are subjected to severe salt spray and salt fog environments per ASTM B117.

10. *Electro-Static Discharge.* Units are subjected to Electro-Static Discharge tests of up to 8.0kV.

General specifications
Circuit breakers shall be individually mounted, drawout, low voltage power circuit breakers. They shall meet the requirements of ANSI C37.13, C37.16, C37.17, C37.50, and shall be listed and labeled to UL-1066 and CSA C22.2.

Circuit breakers shall be manually or electrically operated, with features and accessories described in this specification. Breakers shall have a maximum voltage rating of 635 Vac (600 Vac for integrally fused breakers) and shall be rated to carry 100% of the current rating of the breaker continuously. Breakers shall have minimum interrupting ratings as shown on the drawings.

Circuit breakers shall be metal frame construction. The interrupting mechanism shall contain arc chutes constructed to suppress arcs and cool vented gases - "flash shields" shall not be required in the breaker cubicle. Interphase barriers of insulating material shall be provided to isolate each pole of the breaker.

Circuit breakers shall have true 30 cycle withstand capability equal to its short time interrupting rating to help assure selectivity with downstream devices and minimize nuisance tripping when closing into high inrush loads. The breaker shall not use a hidden instantaneous or making current release to achieve its short time withstand ratings.

Breakers shall contain a true two-step stored energy mechanism providing quick-make, quick-break operation capable of charging-after-close operation. It shall be possible to discharge the closing springs without closing the main contacts. Maximum closing time shall be 5 cycles at nominal control voltage.

Each breaker shall include a flush-mounted, retractable charging handle and close / open pushbuttons. The manual charging handle shall be able to be used to complete charging of an electrically operated breaker in the event control power is lost during the charging operation. All manual control operators (charge / close / open) for the breaker shall be accessible from the front of the breaker when it is installed in a cubicle, with the cubicle door closed. Complete breaker operating status shall be available at the front of the breaker. Indicators in the breaker escutcheon shall provide closing spring status (charge / discharge), breaker main contact status (open / closed) and breaker drawout position (connect / test / disconnect). Each breaker shall have standard padlocking provisions, on the front of the breaker, to lock the breaker open and mechanically trip-free. The padlock provision shall accept up to three padlocks with 1/4 to 3/8" diameter shank.

The breaker trip unit shall be front mounted and shall allow full access to all trip unit information including trip status, pickup and delay settings, trip targets, and metering (where applicable) without opening the breaker cubicle door. A removable, sealable cover shall be provided over the trip unit to limit access to the trip unit. Trip settings, metering information and trip target information shall be accessible with the sealable cover installed. Trip unit settings cannot be changed unless the sealable cover is removed.

Each drawout breaker shall have provisions for up to 72 dedicated secondary disconnect points. All breaker control circuits as well as inputs and outputs for the trip unit shall be wired through the secondary disconnects. Secondary disconnect points shall be self-aligning and automatically couple with mating points in the breaker cubicle when the breaker is in the "test" or "connect" position.

Circuit breakers shall employ a rejection system that will only allow breakers of the correct ampere rating to be installed in the cubicle. A breaker with a higher short circuit interrupting rating shall be allowed to be mounted in the cubicle provided it has the same frame rating. Integrally fused breakers shall not be allowed to be mounted in a cubicle intended for an unfused breaker. Breakers shall be equipped with a rugged guide bar that will ensure alignment of the primary and secondary disconnects as the breaker is being racked into the test and connect positions. Drawout breakers shall be equipped with wheels that will allow the breaker to be rolled into cubicle once it is installed on the drawout rails.

Standard mechanical interlocks shall be provided to prevent moving the breaker from the connect, test, or disconnect position unless the breaker main contacts are open. The breaker shall be prevented from being closed during any racking operation and shall remain trip-free except when it is in the test or connect positions. A mechanical interlock shall discharge any energy stored in the closing springs before the breaker can be withdrawn from its cubicle. A test position shall be provided to permit operating the breaker while it is disconnected from power circuit.

Detailed specifications
This specification covers GE WavePro™ low voltage power circuit breakers, types WPS, WPH, WPX, WPF

The continuous current frame ratings shall be 800, 1600, 2000, 3200, 4000, 5000 amperes.

Circuit breakers shall be manually or electrically operated as shown on the drawings.

Control voltage for electrically operated breakers shall be _____volts <ac> <dc>

System voltage _____volts ac <50> <60> Hz
3Ph <3W> <4W>
Circuit breaker RMS symmetrical interrupting rating __kA at ___volts

Circuit breakers shall be equipped with the following accessories:
- Auxiliary switch <3NO/3NC>, <6NO/6NC> contacts
- Shunt trip, voltage _____.
- 2nd shunt trip, voltage _____. (800-4000A frames only)
- Undervoltage release, voltage _____. <with time delay>
- Electric lockout device to disable manual closing, voltage _____.
- Bell alarm <with> <without> lockout, two-SPDT contacts and mechanical target, resettable from the front of the breaker
- Non-resettable operations counter
- Remote charge indicator contact (1-NO) for electrically operated breakers only
- "Hidden-on" (limited access) close button
- Remote close accessory for manually operated breakers, voltage _____.
- Circuit breakers equipped with non-communicating trip units (Power+™ or MicroVersaTrip Plus™) shall be "power management ready" to accept easy upgrade to MicroVersaTrip PM™ trip unit without modifications to the circuit breaker.
- A maintenance video tape shall be available for use as a supplement to the breaker installation and maintenance manuals. The video shall cover acceptance, installation and operation of the breakers, safety features, accessory removal and replacement, arc chute removal/replacement and contact inspection and maintenance.

Trip devices

Power+™ trip unit

1. Each circuit breaker shall be equipped with a protective trip unit system to open the breaker for overloads, short circuits <and ground faults> as specified in the following subparagraphs. The protective trip unit system shall consist of a solid-state, microprocessor-based trip unit, current sensors, trip actuator and interchangeable rating plugs.

2. As a minimum, the trip unit shall have the following features and functions:
   a. The housing shall be a metallic enclosure to protect against magnetic interference, dust and other contaminants.
   b. The protective system shall have reliable programmable controls with repetitive accuracy and precise unit settings. Overcurrent characteristics (pickup and delay) shall be selected via rotary switches with detented settings.
   c. All current sensing shall employ true rms technology for detecting overloads, <short time> overcurrent conditions and <ground fault conditions>.
   d. The optional Target Module shall be equipped with long-life lithium batteries - with automatic time delay shut-off feature - to provide observation of trip targets. The Target Module and batteries shall not be required for the trip unit to provide its protective functions.
   e. UL listed and CSA certified field installable, interchangeable rating plugs. It shall not be necessary to change or remove the trip unit to change the trip rating. Rating plugs shall contain rejection features to prevent installation of a plug with an incorrect current sensor rating. Rating plugs shall also be used to provide the trip unit with ground fault protection. Rating plugs shall be available with or without ground fault pickup and delay setting switches. It shall be possible to add ground fault protection to a trip unit by simply replacing the rating plug.
   f. Integral test jack for connection of a battery pack or test kit to the breaker.
   g. (When specified) the ground fault function shall contain a memory circuit to integrate low level arcing fault currents with time to sum intermittent ground fault current spikes.
   h. A cover with provisions for sealing the rating plug and trip unit to make the installation tamper-resistant. All trip unit settings, ratings, and target information shall be capable of being viewed with the cover in place.
   i. The unit shall be dual-rated for both 50Hz and 60Hz operation. Noise immunity shall meet the requirements of ANSI Standard C37.90.2
   j. The trip unit shall display trip targets for longtime, short time, instantaneous and ground fault trips (with optional Target Module)

3. The trip units for the main and tie breakers shall include the following protective functions:
   a. Adjustable long time current settings.
   b. Adjustable long time delay with four time delay bands.
   c. Long time pickup warning indicator (with optional Target Module).
   d. Trip targets for overload, short circuit <and ground fault> (with optional Target Module).
   e. Adjustable short time pickup and delay, with three delay bands, and switchable I^2t ramp.
   f. SELECT ONE OF THE FOLLOWING IF GROUND FAULT PROTECTION IS REQUIRED:
      1) <Adjustable ground fault pickup and time delay, with three delay bands, and switchable I^2t ramp.>
      2) <Defeatable ground fault function with adjustable pickup and time delay, with three delay bands, and switchable I^2t ramp.>

4. The trip units for feeder breakers shall include the following protective functions:
   a. Adjustable long time current settings.
   b. Adjustable long time delay with four time delay bands.
   c. Long time pickup warning indicator (with optional Target Module).
   d. Trip targets for overload, short circuit <and ground fault> (with optional Target Module).
   e. <Adjustable short time pickup and delay, with three delay bands, and switchable I^2t ramp> and/or <adjustable instantaneous pickup>.
   f. SELECT ONE OF THE FOLLOWING IF GROUND FAULT PROTECTION IS REQUIRED:
      1) <Adjustable ground fault pickup and time delay, with three delay bands, and switchable I^2t ramp.>
      2) <Defeatable ground fault function with adjustable pickup and time delay, with three delay bands, and switchable I^2t ramp.>

5. Current sensors shall be mounted on the breaker frame and shall use encapsulated construction to protect against damage and moisture. <For ground fault protection of a four-wire power system, a fourth - neutral current - sensor shall be mounted in the cable compartment, and shall be compatible with the phase current sensors.>

MicroVersaTrip Plus™ and MicroVersaTrip PM™

1. Each circuit breaker shall be equipped with a protective trip unit system to open the breaker for overloads, short circuits <and ground faults> as specified in the following subparagraphs. The protective trip unit system shall consist of a solid-state, microprocessor-based trip unit, current sensors, trip actuator and interchangeable rating plugs.

2. As a minimum, the trip unit shall have the following features and functions:
   a. The housing shall be a metallic enclosure to protect against magnetic interference, dust and other contaminants.
   b. The protective system shall have reliable programmable controls with repetitive accuracy and precise unit settings.
   c. All current sensing shall employ true rms technology for detecting overloads, <short time> overcurrent conditions, <and ground fault conditions>.
   d. A high contrast, liquid crystal display - LCD - unit shall display settings, trip targets, and the specified metering displays. The trip unit shall be equipped with long-life lithium batteries - with automatic time delay shut-off feature - to provide both programming and observation of trip targets or other functions when the breaker is de-energized.
   e. A multi-button keypad to provide local setup and readout on the LCD of all trip settings, metering values, and trip targets.
   f. UL listed and CSA certified field installable, interchangeable rating plugs. It shall not be necessary to change or remove the trip unit to change the trip rating. Rating plugs shall contain rejection features to prevent installation of a plug with an incorrect current sensor rating.
   g. Integral test jack for connection of a battery pack or test kit to the breaker.
   h. (When specified) the ground fault function shall contain a memory circuit to integrate low level arcing fault currents with

time to sum intermittent ground fault current spikes.

i. A cover with provisions for sealing the rating plug, the trip unit, and the "ENTER" key on the protective trip unit to make the installation tamper-resistant. All trip unit settings, ratings, and target information shall be capable of being viewed with the cover in place.
j. The unit shall be dual-rated for both 50Hz and 60Hz operation. Noise immunity shall meet the requirements of ANSI Standard C37.90.2
k. The trip unit shall have an integral, resettable trip counter to record the number of long time, short time, instantaneous and ground fault trips. Trip target information shall include fault current magnitude and phase for long time and short time trips and fault current magnitude (as a function of the sensor rating) for ground fault trips. When the trip unit is supplied with additional protective relay functions, the display shall also provide target indication for each type of protective relay trip.
l. The trip unit shall display trip targets for longtime, short time, instantaneous and ground fault trips.
m. All trip unit settings and trip target information shall be stored in nonvolatile memory.

3. The trip units for the main and tie breakers shall include the following protective functions:
   a. Adjustable long time current settings.
   b. Adjustable long time delay with four time delay bands.
   c. Long time pickup warning indicator.
   d. Trip targets for overload, short circuit <and ground fault>.
   e. Adjustable short time pickup and delay, with three delay bands, and switchable I^2t ramp.
   f. SELECT ONE OF THE FOLLOWING IF GROUND FAULT PROTECTION IS REQUIRED:
      1) <Adjustable ground fault pickup and time delay, with three delay bands, and switchable I^2t ramp.>
      2) <Defeatable ground fault function with adjustable pickup and time delay, with three delay bands, and switchable I^2t ramp.>
   g. OPTIONAL: <Switchable short time / instantaneous and ground fault protection.>
   h. OPTIONAL (Select one if req'd): Zone selective interlocking <for ground fault only> <for both ground fault and short time>.

4. The trip units for feeder breakers shall include the following protective functions:
   a. Adjustable long time current settings.
   b. Adjustable long time delay with four time delay bands.
   c. Long time pickup warning indicator.
   d. Trip targets for overload, short circuit <and ground fault>.
   e. <Adjustable short time pickup and delay, with three delay bands, and switchable I^2t ramp> and/or <adjustable instantaneous pickup>.
   f. SELECT ONE OF THE FOLLOWING IF GROUND FAULT PROTECTION IS REQUIRED:
      1) <Adjustable ground fault pickup and time delay, with three delay bands, and switchable I^2t ramp.>
      2) <Defeatable ground fault function with adjustable pickup and time delay, with three delay bands, and switchable I^2t ramp.>
   g. OPTIONAL: <Switchable short time / instantaneous and ground fault protection.>
   h. OPTIONAL (Select one if req'd): Zone selective interlocking <for ground fault only> <for both ground fault and short time>.

5. The trip units shall include the following metering functions, which shall be displayed on the LCD:
   a. Current, rms (A or kA), each phase 2.0% accuracy.
   b. OPTIONAL (Note - if any of the following are included, all will be included)
      1) Voltage, rms (V), line-to-line or line-to-neutral, +/-1.5% accuracy.
      2) Energy (kWh, MWh, GWh), total, +/-3.5% accuracy, user resettable.
   3) Demand (kWh, MWh, GWh) over an adjustable time period of 5 to 60 minutes, +/- 3.5% accuracy.
   4) Peak Demand (kW, MW), +/- 3.5% accuracy, user resettable.
   5) Real power (kW, MW), line-to-line, line-to-neutral, +/- 3.5% accuracy.
   6) Total (apparent) power (kVA, MVA), line-to-line, line-to-neutral, +/-3.5% accuracy.
   7) Frequency (Hz), +/-1Hz accuracy.

6. OPTIONAL: The trip unit shall include all of the following protective functions. However, it shall be possible to disable, by user programming, any combination of unwanted protective functions.
   a. Undervoltage, adjustable pickup - 50 to 90%, adjustable delay - 1 to 15 seconds.
   b. Overvoltage, adjustable pickup - 110 to 150%, adjustable delay - 1 to 15 seconds.
   c. Voltage unbalance, adjustable pickup - 10 to 50%, adjustable delay - 1 to 15 seconds.
   d. Current unbalance, adjustable pickup - 10 to 50%, adjustable delay - 1 to 15 seconds.
   e. Reverse power, selectable direction, adjustable pickup - 10kW to 990kW, adjustable delay - 1 to 15 seconds.

7. OPTIONAL: The trip unit shall include communication capability as follows:
   a. The trip unit, through dedicated secondary terminals on the breaker, shall provide a communication port for communication with and access to a remote computer via the breaker supplier's standard communication network and protocol.
   b. All metering, setpoints, protective trip counts, and other event signaling shall be retrievable by the remote computer.

8. Current sensors shall be mounted on the breaker frame and shall use encapsulated construction to protect against damage and moisture. <For ground fault protection of a four-wire power system, a fourth - neutral current - sensor shall be mounted in the cable compartment, and shall be compatible with the phase current sensors.>

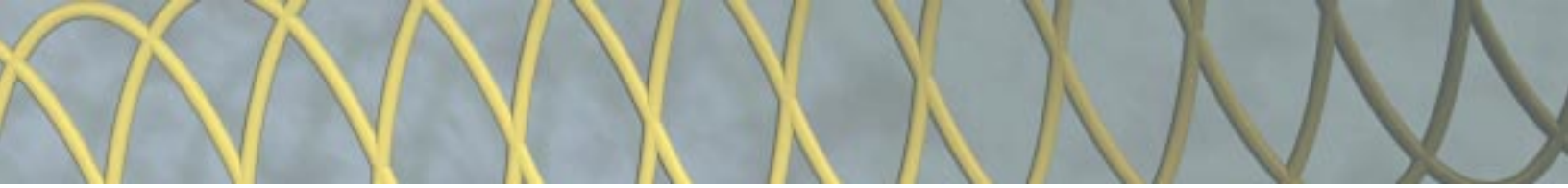

GE Electrical Distribution & Control

General Electric Company
41 Woodford Avenue, Plainville, CT 06062
www.ge.com/edc

DET-167 0298 BL

© 1998 General Electric Company