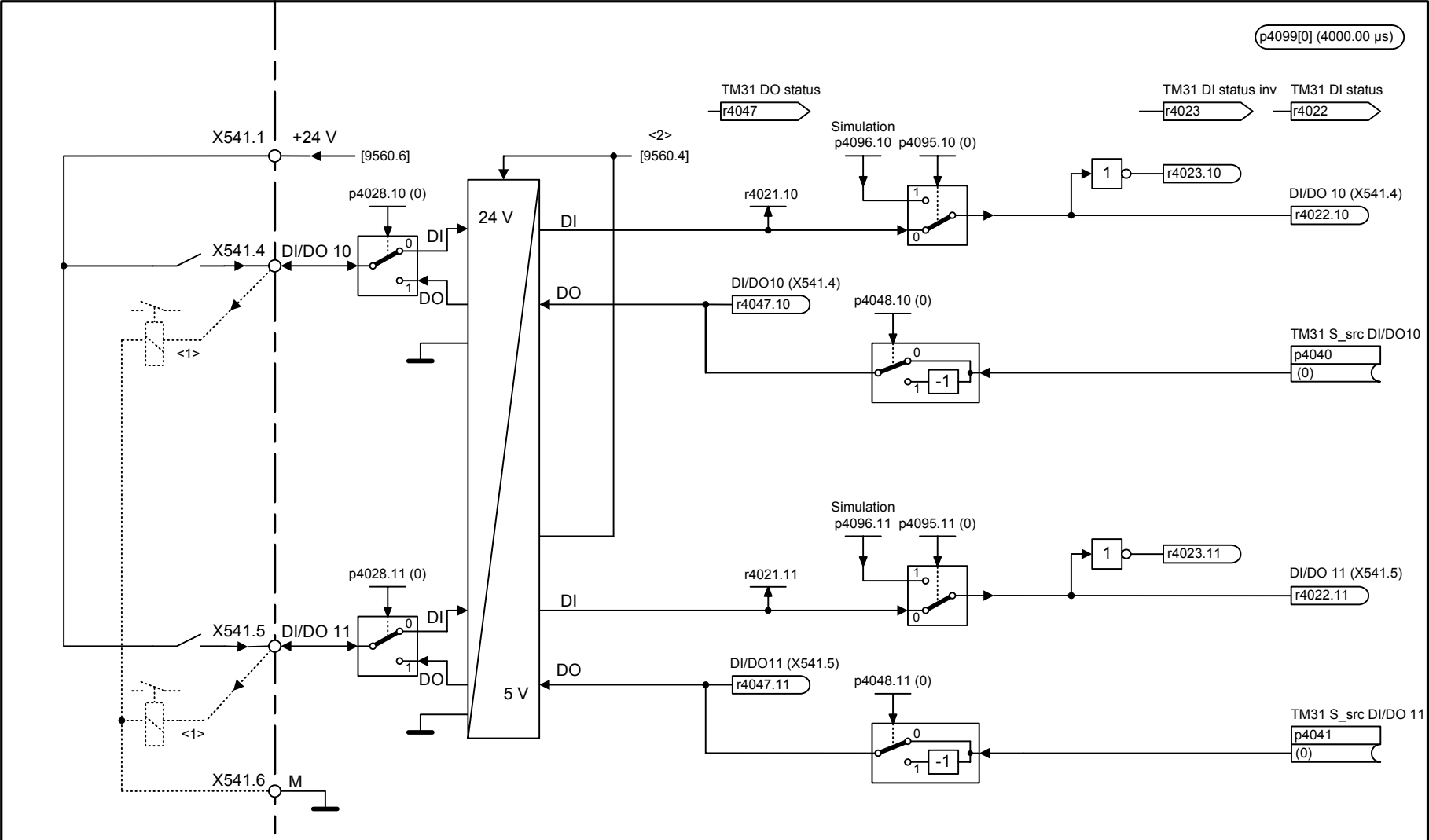

<1> The connection shown as a dased line applies when set as digital output (p4028.x = 1).

<2> Limits the total output current on terminals X541.2, X541.3, X541.4 and X541.5 to 0.1 A (p4046 = 0) or 1 A (p4046 = 1).