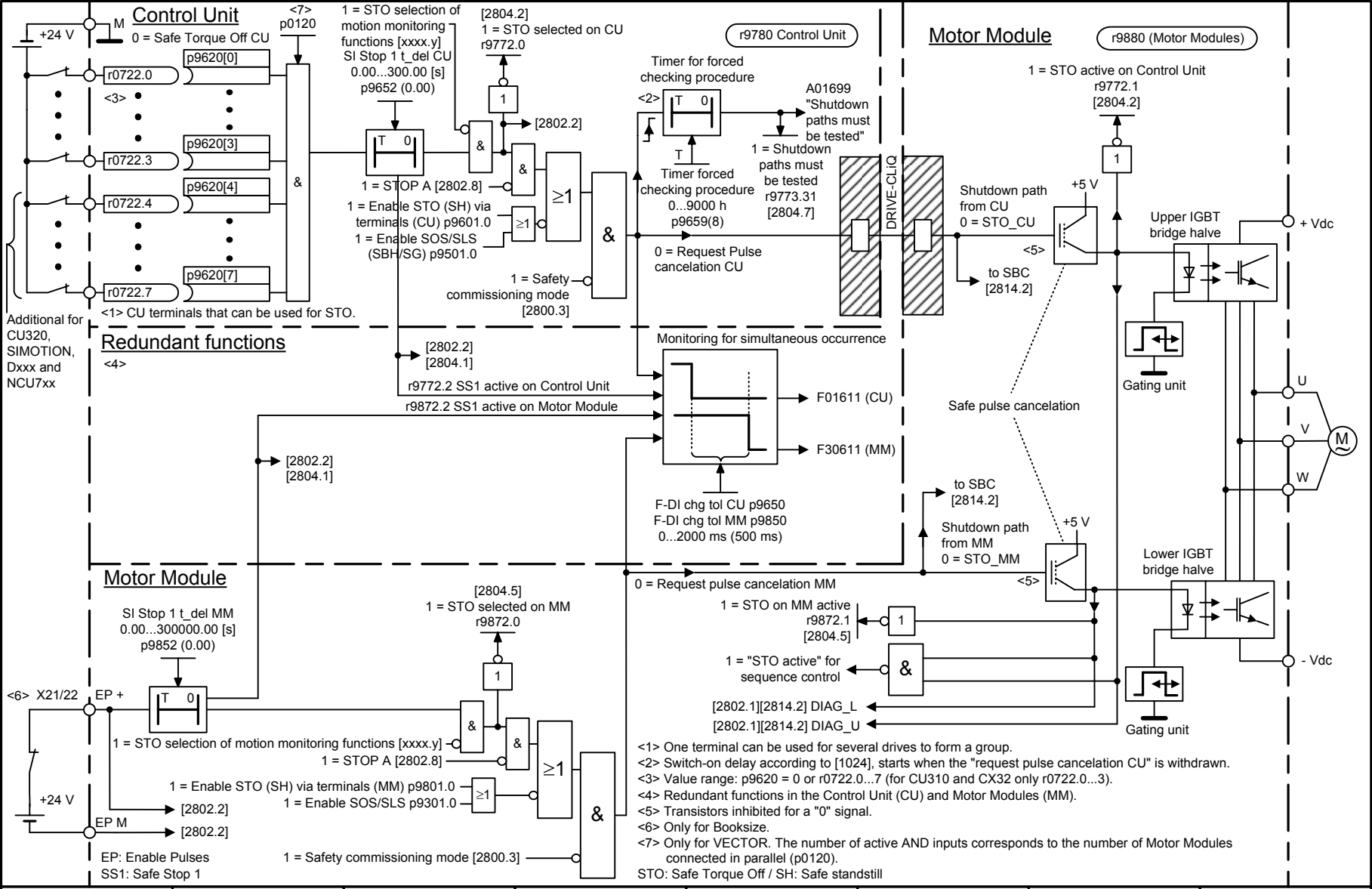
Control Unit
+24 V
M
0 = Safe Torque Off CU
<7> p0120
r0722.0
p9620[0]
<3>
r0722.3
p9620[3]
r0722.4
p9620[4]
r0722.7
p9620[7]
&
<1> CU terminals that can be used for STO.
Additional for CU320, SIMOTION, Dxxx and NCU7xx
1 = STO selection of motion monitoring functions [xxxx.y]
SI Stop 1 t_del CU
0.00...300.00 [s]
p9652 (0.00)
T 0
1 = STOP A [2802.8]
1 = Enable STO (SH) via terminals (CU) p9601.0
1 = Enable SOS/SLS (SBH/SG) p9501.0
≥1
[2804.2]
1 = STO selected on CU
r9772.0
1
[2802.2]
1 = Safety commissioning mode [2800.3]
r9780 Control Unit
Timer for forced checking procedure
<2>
T 0
Timer forced checking procedure
0...9000 h
p9659(8)
A01699 "Shutdown paths must be tested"
1 = Shutdown paths must be tested
r9773.31
[2804.7]
0 = Request Pulse cancelation CU
DRIVE-CLIQ
Motor Module
r9880 (Motor Modules)
1 = STO active on Control Unit
r9772.1
[2804.2]
Shutdown path from CU
0 = STO_CU
+5 V
<5>
to SBC
[2814.2]
Upper IGBT bridge halve
+ Vdc
Gating unit
U
V
W
M
Safe pulse cancelation
Redundant functions
<4>
[2802.2]
[2804.1]
r9772.2 SS1 active on Control Unit
r9872.2 SS1 active on Motor Module
Monitoring for simultaneous occurrence
F01611 (CU)
F30611 (MM)
F-DI chg tol CU p9650
F-DI chg tol MM p9850
0...2000 ms (500 ms)
to SBC
[2814.2]
Shutdown path from MM
0 = STO_MM
+5 V
<5>
Lower IGBT bridge halve
- Vdc
Gating unit
Motor Module
SI Stop 1 t_del MM
0.00...300000.00 [s]
p9852 (0.00)
[2804.5]
1 = STO selected on MM
r9872.0
0 = Request pulse cancelation MM
1 = STO on MM active
r9872.1
[2804.5]
1 = "STO active" for sequence control
[2802.1][2814.2] DIAG_L
[2802.1][2814.2] DIAG_U
<6> X21/22
EP +
EP M
+24 V
1 = STO selection of motion monitoring functions [xxxx.y]
1 = STOP A [2802.8]
1 = Enable STO (SH) via terminals (MM) p9801.0
1 = Enable SOS/SLS p9301.0
1 = Safety commissioning mode [2800.3]
EP: Enable Pulses
SS1: Safe Stop 1
<1> One terminal can be used for several drives to form a group.
<2> Switch-on delay according to [1024], starts when the "request pulse cancelation CU" is withdrawn.
<3> Value range: p9620 = 0 or r0722.0...7 (for CU310 and CX32 only r0722.0...3).
<4> Redundant functions in the Control Unit (CU) and Motor Modules (MM).
<5> Transistors inhibited for a "0" signal.
<6> Only for Booksize.
<7> Only for VECTOR. The number of active AND inputs corresponds to the number of Motor Modules connected in parallel (p0120).
STO: Safe Torque Off / SH: Safe standstill