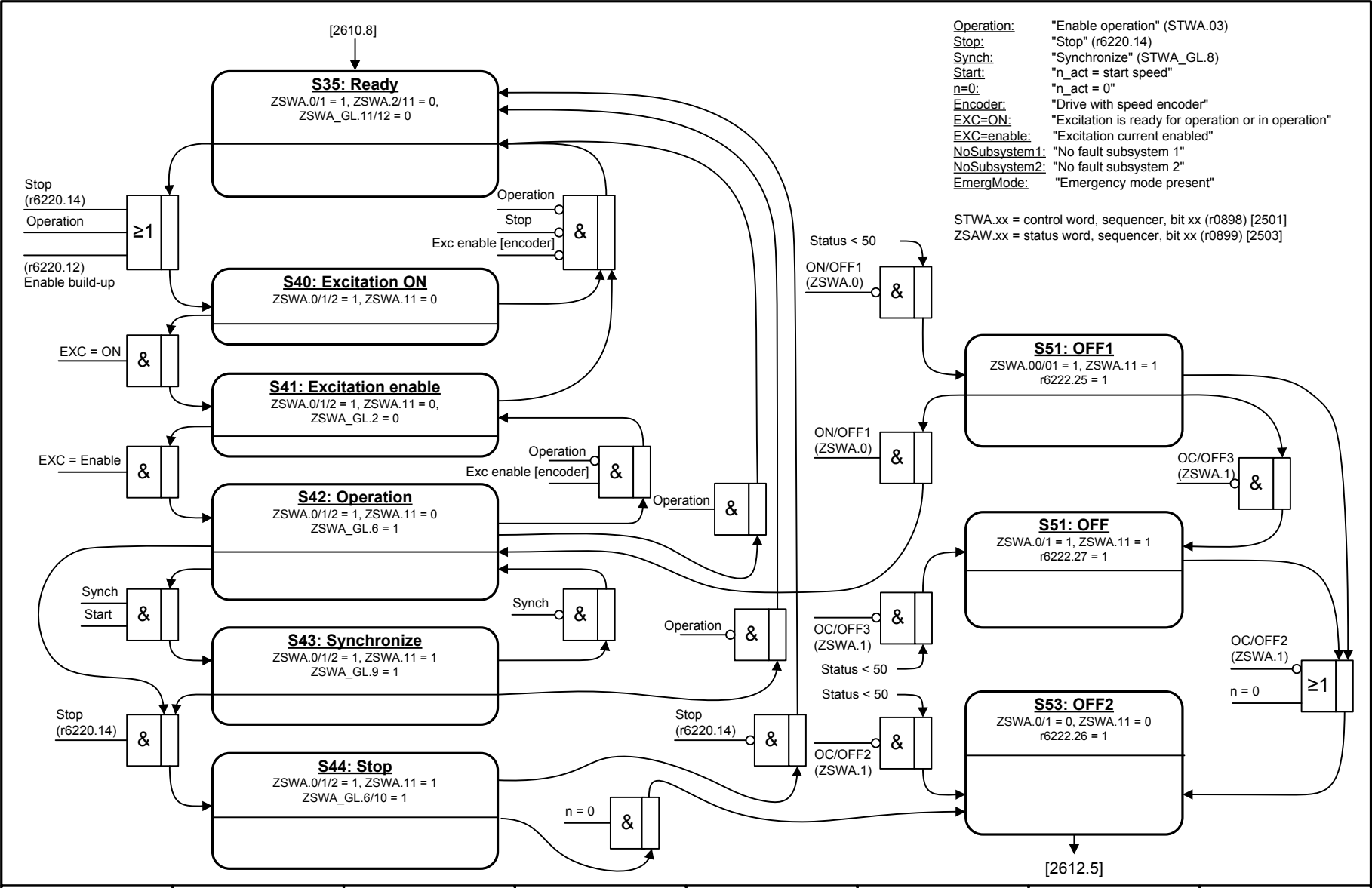

1	2	3	4	5	6	7	8
DO: VECTORGL					fp_2611_07_eng.vsd	Function diagram	- 2611 -
Sequence control - Sequencer (2)					14.02.07 V02.05.00	SINAMICS GL	