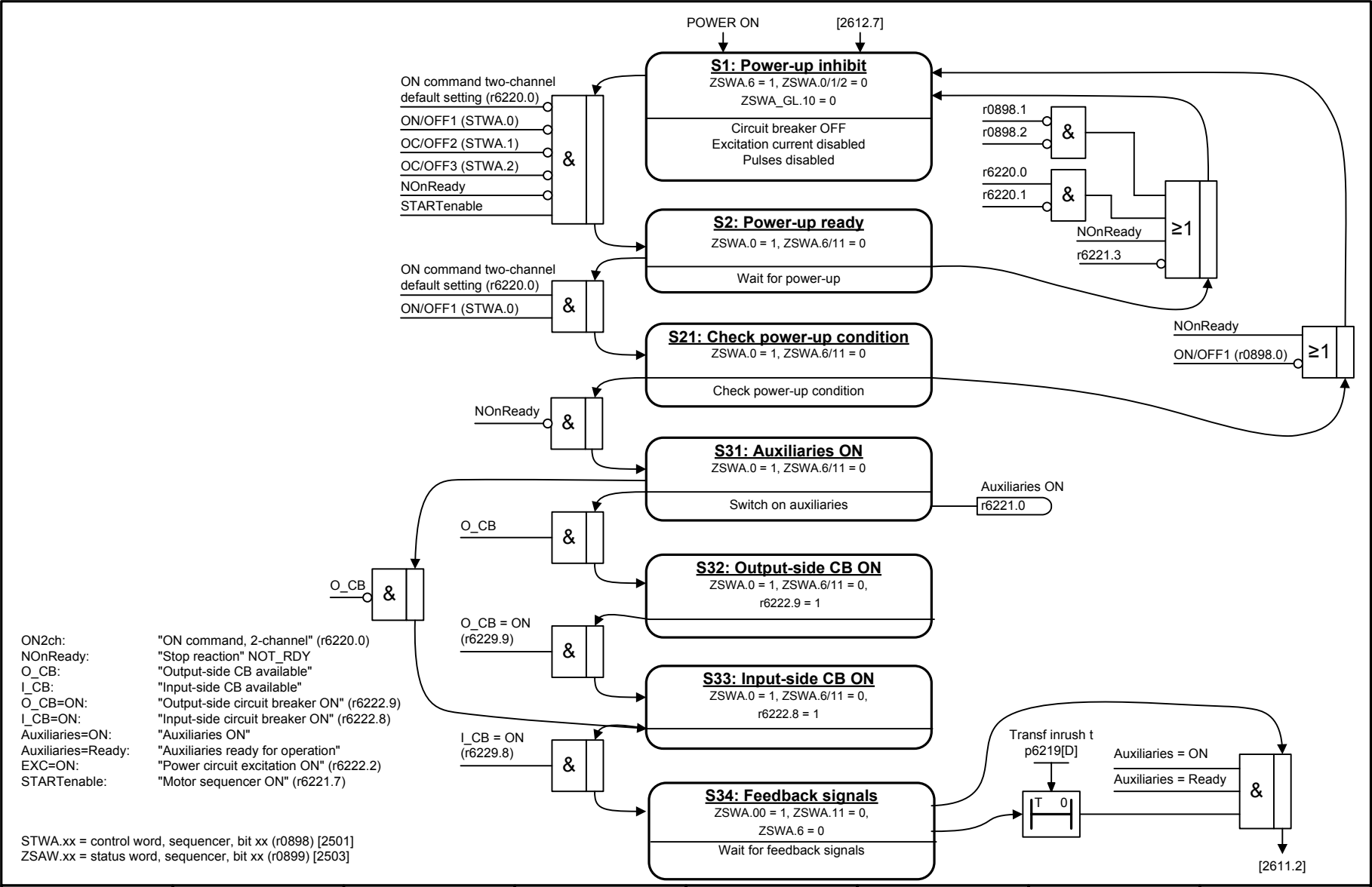
POWER ON
[2612.7]
S1: Power-up inhibit
ZSWA.6 = 1, ZSWA.0/1/2 = 0
ZSWA_GL.10 = 0
Circuit breaker OFF
Excitation current disabled
Pulses disabled
ON command two-channel
default setting (r6220.0)
ON/OFF1 (STWA.0)
OC/OFF2 (STWA.1)
OC/OFF3 (STWA.2)
NOnReady
STARTenable
&
r0898.1
r0898.2
r6220.0
r6220.1
≥1
r6221.3
S2: Power-up ready
ZSWA.0 = 1, ZSWA.6/11 = 0
Wait for power-up
ON command two-channel
default setting (r6220.0)
ON/OFF1 (STWA.0)
S21: Check power-up condition
ZSWA.0 = 1, ZSWA.6/11 = 0
Check power-up condition
NOnReady
ON/OFF1 (r0898.0)
NOnReady
S31: Auxiliaries ON
ZSWA.0 = 1, ZSWA.6/11 = 0
Switch on auxiliaries
Auxiliaries ON
r6221.0
O_CB
S32: Output-side CB ON
ZSWA.0 = 1, ZSWA.6/11 = 0,
r6222.9 = 1
O_CB = ON
(r6229.9)
S33: Input-side CB ON
ZSWA.0 = 1, ZSWA.6/11 = 0,
r6222.8 = 1
I_CB = ON
(r6229.8)
S34: Feedback signals
ZSWA.00 = 1, ZSWA.11 = 0,
ZSWA.6 = 0
Wait for feedback signals
Transf inrush t
p6219[D]
T 0
Auxiliaries = ON
Auxiliaries = Ready
[2611.2]
ON2ch: "ON command, 2-channel" (r6220.0)
NOnReady: "Stop reaction" NOT_RDY
O_CB: "Output-side CB available"
I_CB: "Input-side CB available"
O_CB=ON: "Output-side circuit breaker ON" (r6222.9)
I_CB=ON: "Input-side circuit breaker ON" (r6222.8)
Auxiliaries=ON: "Auxiliaries ON"
Auxiliaries=Ready: "Auxiliaries ready for operation"
EXC=ON: "Power circuit excitation ON" (r6222.2)
STARTenable: "Motor sequencer ON" (r6221.7)
STWA.xx = control word, sequencer, bit xx (r0898) [2501]
ZSAW.xx = status word, sequencer, bit xx (r0899) [2503]