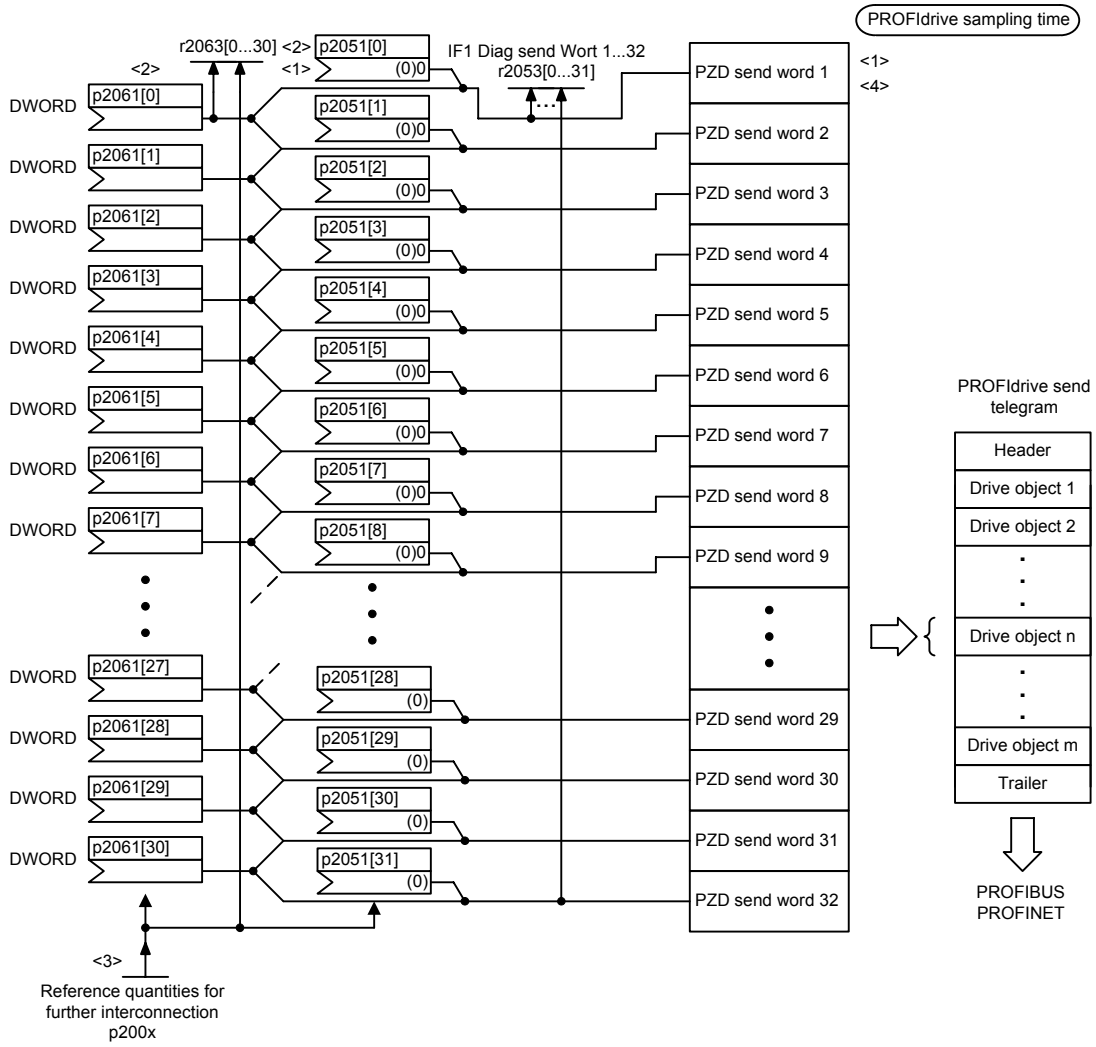


<1> To comply with the PROFIdrive profile, send word 1 must be used as status word 1 (ZSW1), not as DWORD.

<2> Every PZD word can be assigned a word or a double word. Only one of the 2 interconnection parameters p2051 or p2061 may have a value ≠ 0 for a PZD word.

<3> Physical word and double word values are inserted in the telegram as referenced variables. p200x apply as reference variables (telegram contents = 4000 hex or 4000 0000 hex in the case of double words, if the input variable has the value p200x).
The following applies for temperature values: 100° C -> 100 % = 4000 hex; 0° C -> 0% = 4000 0000 hex.
The following applies for the electrical angle: 90° C -> 100 % = 4000 hex; 0° C -> 0 % = 4000 0000 hex.

<4> The number of PZD send words depends on the drive object type.