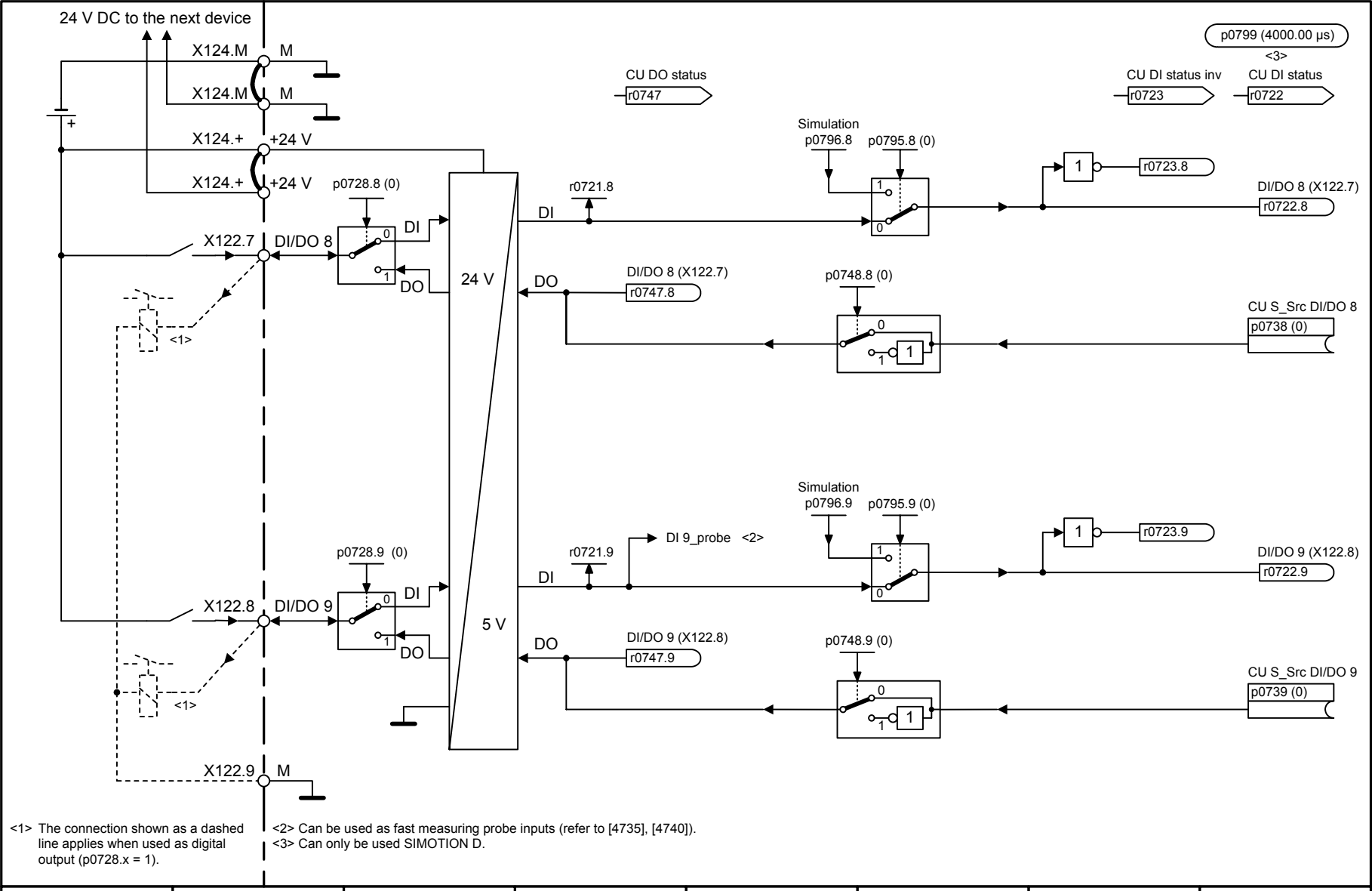

<1> The connection shown as a dashed line applies when used as digital output (p0728.x = 1).

<2> Can be used as fast measuring probe inputs (refer to [4735], [4740]).
<3> Can only be used SIMOTION D.