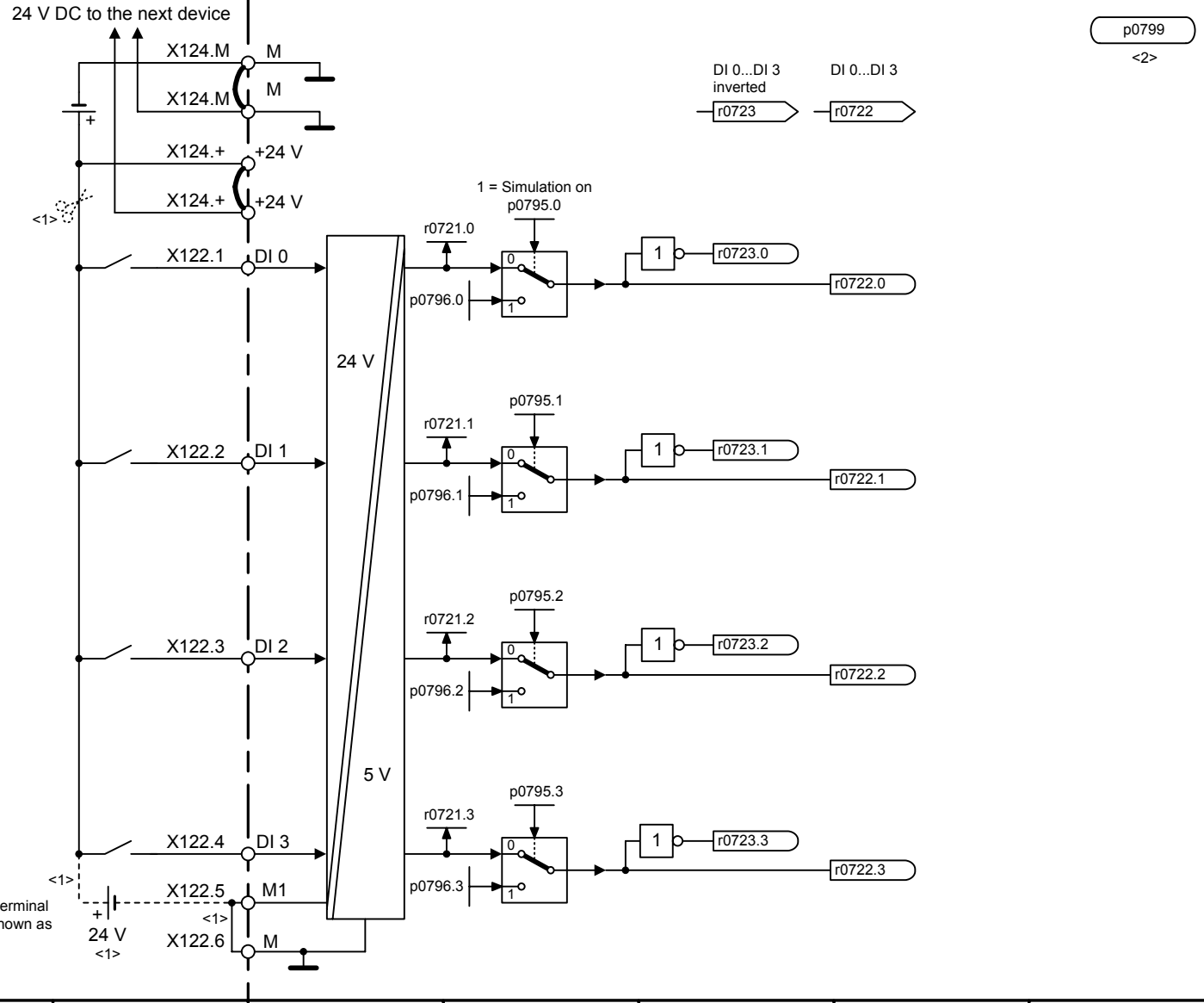

<1> When using the electrical isolation, omit the terminal jumper and connect the load power supply shown as a dashed line.
<2> Can only be used with SIMOTION D.

1	2	3	4	5	6	7	8
DO: CU_CX32					fp_2220_51_eng.vsd	Function diagram	- 2220 -
CX32 input/output terminals - Digital inputs, electrically isolated (DI 0 ... DI 3)					19.05.06 V02.05.00	SINAMICS	