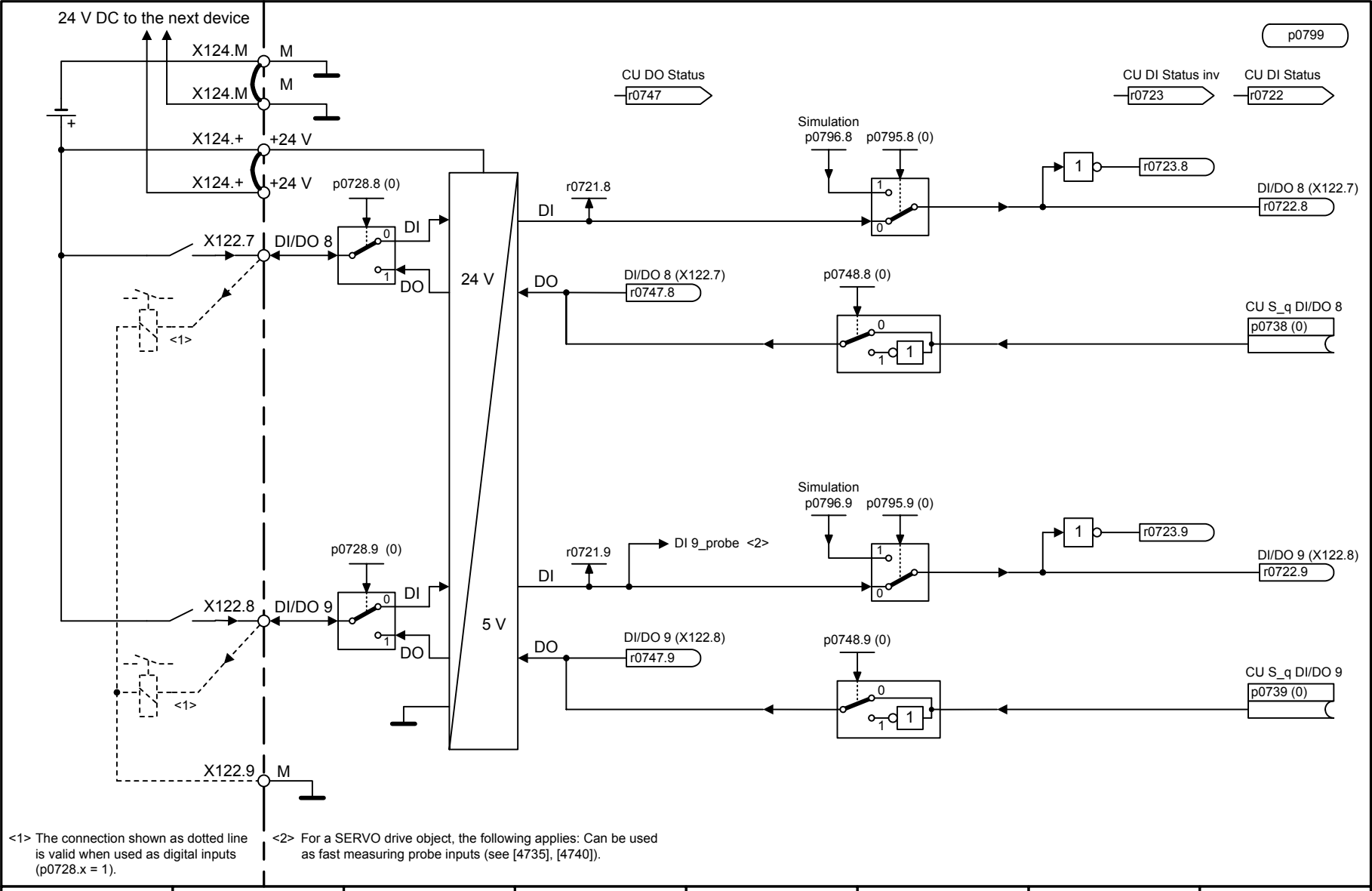

<1> The connection shown as dotted line is valid when used as digital inputs (p0728.x = 1).

<2> For a SERVO drive object, the following applies: Can be used as fast measuring probe inputs (see [4735], [4740]).