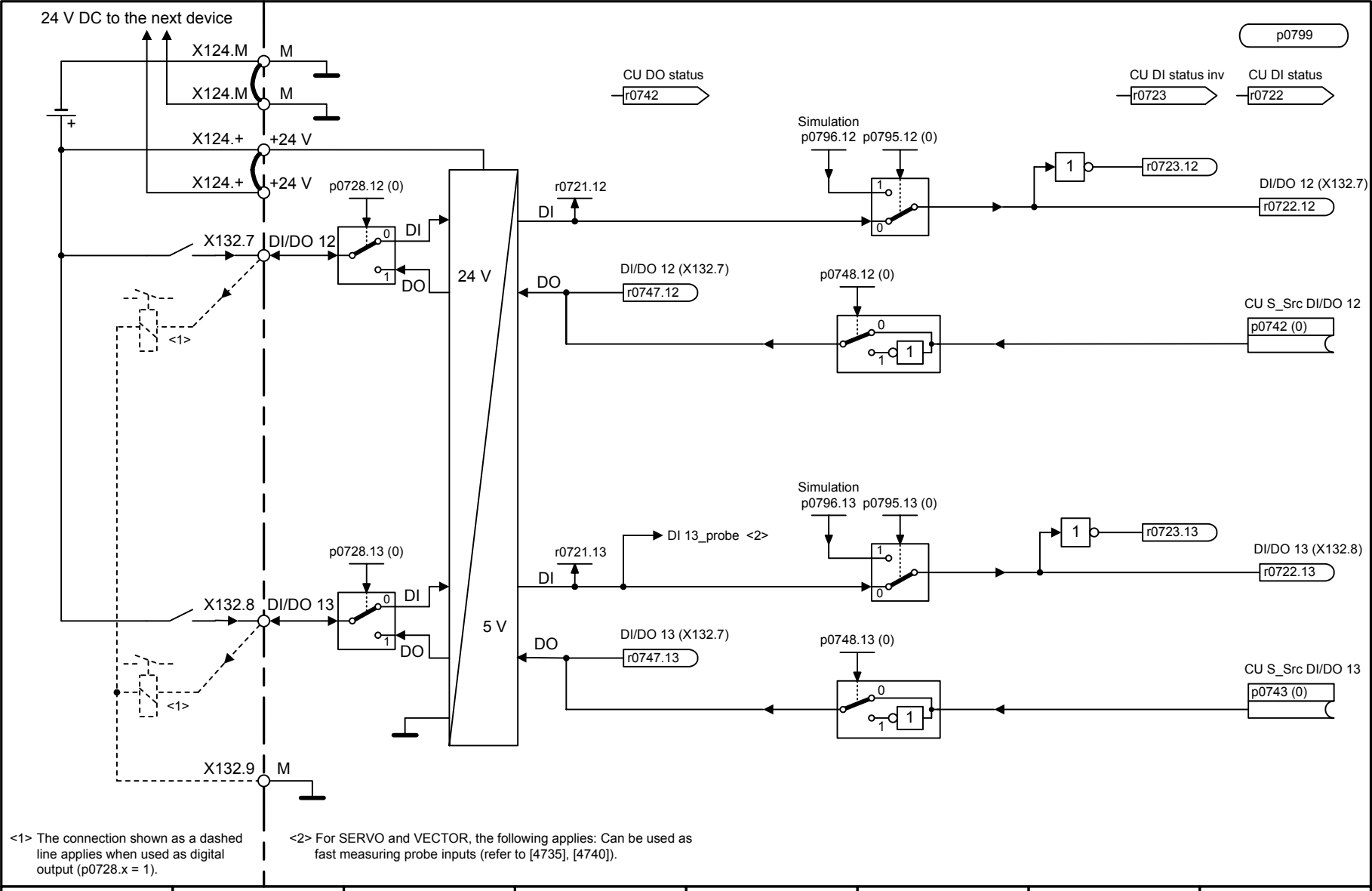

<1> The connection shown as a dashed line applies when used as digital output (p0728.x = 1).

<2> For SERVO and VECTOR, the following applies: Can be used as fast measuring probe inputs (refer to [4735], [4740]).