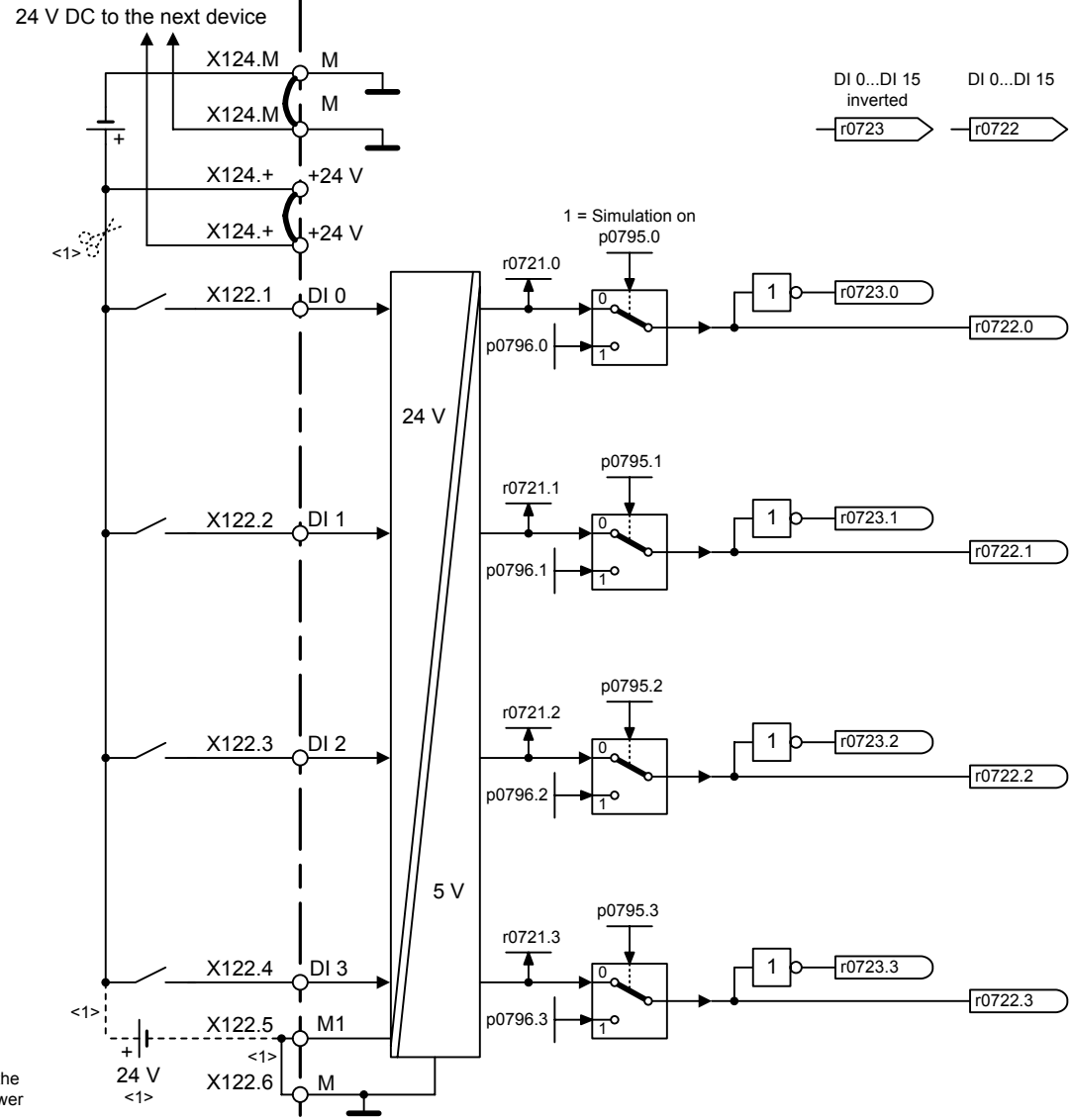

<1> When using the electrical isolation, omit the terminal jumper and connect the load power supply shown as a dashed line.

1	2	3	4	5	6	7	8
DO: CU_GL, CU_GM, CU_S					fp_2120_51_eng.vsd	Function diagram	- 2120 -
CU320 input/output terminals - Digital inputs, electrically isolated (DI 0 ... DI 3)					19.05.06 V02.05.00	SINAMICS	