SIEMENS

SIMOVERT Master Drives Overcurrent Protector

Operating Instructions

Edition: **03**

Order No.: 6SE7000-0AD64

The reproduction, transmission or use of this document or contents is not permitted without express written authority. Offenders will be liable for damages. All rights, including rights created by patent grant or registration of a utility model or design, are reserved.

We have checked that the contents of this publication agree with the hardware and software described herein. Nonetheless, differences might exist and therefore we cannot guarantee that they are completely identical. The information given in this publication is reviewed at regular intervals and any corrections that might be necessary are made in the subsequent printings. Suggestions for improvement are welcome at all times.

SIMOVERT ® is a registered trademark of Siemens

© Siemens AG 2001 All rights reserved

ENGLISH

Contents

		Page
0	**Definitions**	0-5
1	**Description**	1-1
1.1	Scope of application	1-1
1.2	Mode of operation	1-1
1.2.1	Actual value sensing, power disconnection on inverter commutation failure	1-2
1.2.2	Fan monitoring	1-2
1.3	Fuse protection	1-2
1.4	Selection and assignment to R/RF units	1-2
2	Transport, Unpacking and Assembly	2-1
2.1	Transport and unpacking	2-1
2.2	Storage	2-1
2.3	Assembly	2-1
2.4	Dimension drawing	2-3
3	Connection	3-1
3.1	Power connection	3-2
3.2	Fuse protection	3-2
3.3	Fan connection	3-3
3.4	Power supply and main contactor	3-3
3.4.1	Overtemperature alarm relay	3-4
3.4.2	Connecting the control leads	3-5
3.4.3	Control terminal strip XKIPP1 on underside of device	3-6
3.5	Measures for keeping to RFI suppression regulations	3-6
3.6	Schematic diagram	3-7
3.7	Recommended connection of control	3-7
3.8	Power sections	3-8
3.8.1	OCP type: 6SE7041-0TS85-5JA0	3-8
3.8.2	OCP type: 6SE7041-8TS85-5JA0	3-9
3.8.3	OCP type: 6SE7041-0WS85-5JA0	3-10
3.8.4	OCP type: 6SE7042-0WS85-5JA0	3-11
3.9	6- and 12-pulse parallel connection with OCP	3-12
3.9.1	Block diagrams with recommended connections for parallel connection with OCP	3-12
3.9.1.1	6-pulse parallel connection	3-12
3.9.1.2	12-pulse parallel connection	3-13
3.9.1.3	12-pulse parallel connection with an OCP	3-14

		Page
4	**Start-Up**	4-1
4.1	Introduction and general start-up instructions	4-1
4.1.1	General explanation of terms and functionality	4-1
4.2	Initial start-up	4-1
4.2.1	Preparatory measures	4-1
4.2.2	Checking the correct connection of the power section	4-2
5	**Fault and Alarm Messages**	5-1
5.1	LED displays on board A7037	5-1
5.2	Position of display LEDs on board A7037	5-1
6	**Maintenance**	6-1
6-1	Maintenance recommendations	6-1
6.2	Replacing components	6-2
6.2.1	Aust Replacing the fan (E1)	6-2
6.2.2	Replacing modules	6-3
6.2.2.1	Connection of fan monitor on boards A7037 and A7036	6-3
6.2.2.2	Position of connecting elements and LEDs on board A7037	6-4
6.2.3	Replacement of IGBTs	6-5
6.2.4	Replacement of varistors (R1 to R4 or R2+R3)	6-6
6.2.5	Replacement of diode assembly (V10)	6-7
7	**Spare-parts**	7-1
8	**Environmental Compatibility**	8-1
9	**Technical Data**	9-1
9-1	Power reduction at increased coolant temperature	9-3
9.2	Power reduction at altitudes > 1000m above MSL	9-3
9.3	Applied standards	9-4

0 Definitions

- QUALIFIED PERSONNEL

  For the purpose of this Instruction Manual and product labels, a "Qualified person" is someone who is familiar with the installation, construction and operation of the equipment and the hazards involved. He or she must have the following qualifications:

  1. Trained and authorized to energize, de-energize, clear, ground and tag circuits and equipment in accordance with established safety procedures.
  2. Trained in the proper care and use of protective equipment in accordance with established safety procedures.
  3. Trained in rendering first aid.

- ⚠ **DANGER**

  indicates an imminently hazardous situation which, if not avoided, will result in death or serious injury.

- ⚠ **WARNING**

  indicates a potentially hazardous situation which, if not avoided, could result in death or serious injury.

- ⚠ **CAUTION**

  used with the safety alert symbol indicates a potentially hazardous situation which, if not avoided, may result in minor or moderata injury.

- **CAUTION**

  used without the safety alert symbol indicates a potentially hazardous situation which, if not avoided, may result in property demage.

- **NOTICE**

  NOTICE used without the safety alert symbol indicates a potentially situation which, if not avoided, may result in an undesireable result or state.

NOTE
For reasons of clarity, these operating instructions do not contain all details of all types of the product and can also not take into account every conceivable installation, operation or maintenance circumstances. You can consult your local Siemens branch if you should require further information or if particular problem occur that are not dealt with in adequate detail in the operating instructions. Attention is also drawn to the fact that the contents of this instruction manual shall not become part of or modify any prior or existing agreement, commitment or legal relationship. The sales contract, which also contains the complete and solely valid warranty stipulations, contains the entire obligations of Siemens. These contractual warranty stipulations are neither extended nor limited by the statements given in instructions and documentation.

CAUTION

Electrostatically Sensitive Devices (ESDs)

The equipment contains electrostatically sensitive devices. These components may be destroyed very easily by improper handling. Please observe the following notes if you nevertheless have to work with electronic modules:

- Electronic modules should only be touched if absolutely necessary to carry out work on them.
- If modules nevertheless have to be touched, you must discharge your own body directly beforehand (this is best done by touching an earthed conductive object such as the PE contact of a socket).
- Modules must not come into contact with highly insulating materials – e.g. plastic films, insulating desktops or synthetic fibber clothing items.
- Modules must only be placed on conductive surfaces.
- When soldering modules, the tip of the soldering iron must be earthed.
- Modules and components must only be stored or dispatched in conductive packaging (e.g. metallized plastic boxes or metal tins).
- If packagings are not conductive, modules must be placed in a conductive envelopment prior to packaging. In this case, use can be made of conductive foam rubber or domestic aluminum foil, for example.

The necessary protective measures for ESDs are elucidated once again in the following figure:

a	=	conductive floor	d	=	ESD coat
b	=	ESD desk	e	=	ESD armband
c	=	ESD shoes	f	=	earthing terminal on cabinets

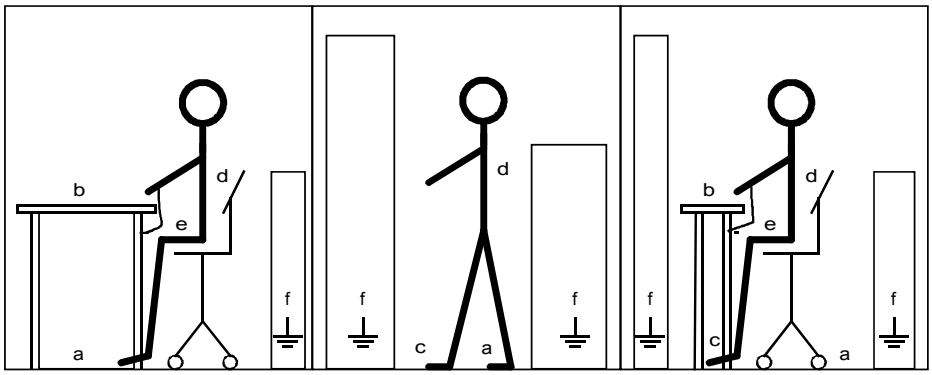

Seated workstation Standing workstation Standing/seated workstation

	WARNING
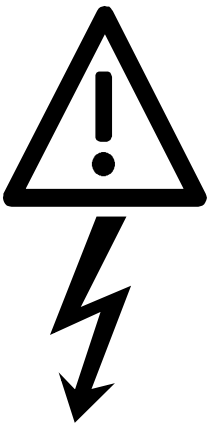	When operating electrical equipment, certain parts of such equipment are inevitably live. Owing to the dc link capacitors, hazardous voltages are present on the equipment up to 5 min. after deenergization (power terminal and electronic power supply). This is why it is not permitted to open the housing until after waiting for 5 minutes. Non-observance of warning notices can result in death, severe personal injury or considerable property damage. Such personnel must be thoroughly acquainted with all warnings and maintenance activities. Perfect and safe operation of the equipment requires proper transport, expert storage, installation and assembly and cautious operation and maintenance.

1 Description

1.1 Scope of application

The Overcurrent Protector (OCP) is an additional device connected between the rectifier/regenerative feedback unit (R/RF unit) of the SIMOVERT Master Drives 6SE70 series and the associated SIMOVERT Master Drives 6SE70 inverters. The protector is looped into the open plus cable of the DC link. In rectifier operation, the current flows across the diode connected back-to-back with the IGBT and, in regenerative feedback operation, via the continuously on-state IGBT. If a current which causes the saturation voltage of the IGBT to rise flows in inverter operation, this voltage is evaluated to turn off the IGBT and the current flow in the DC link interrupted, the thyristors in the R/RF unit and fuses are protected. The CUR control electronics of the R/RF unit provide a second IGBT drive circuit. If the CUR detects inverter commutation failure, the drive signal for the IGBT is disabled, irrespective of the magnitude of the DC link current. Every time the IGBT is turned off, the R/RF unit signals a fault by interrupting the DC link. The signal is passed to the OCP via a 2-pin terminal connection. If the inverter connected to the DC link continues to operate in generator mode, the DC voltage rises until the inverter pulses are disabled, the inverter signals DC link overvoltage. After a specific time period (max. 1 minute), the commutation failure protection is ready again to carry regenerative current. Any fault messages to the R/RF unit and inverter can be acknowledged. Another power-up operation can be started. No messages need be acknowledged on the OCP itself.

The OCP can also be retrofitted on existing systems. For this purpose, the plus bar between the R/RF unit and the inverter must be opened and the OCP looped in. The unit is installed locally in an additional cubicle or, particularly in the case of retrofitted protectors, resting on the "roof" of an existing cubicle. The enclosure and connections must be constructed accordingly. The OCP can also operate in parallel-connected R/RF units (type of construction K).

If power sections are connected in parallel to increase the output current, one OCP must be connected between each R/RF unit and the DC link. For further information about parallel connections and 12-pulse connections, see Chapters 3.7 and 3.8 respectively in the operating instructions for the R/RF units.

1.2 Mode of operation

The OCP is looped into the positive DC bar of the DC link only. In rectifier (motor) operation, the DC link current flows from the rectifying thyristor bridge via a diode on the OCP to the DC link. In regenerative (generator) mode, the DC link current flows from the DC link via an IGBT on the OCP into the inverting thyristor bridge. The OCP is connected such that the IGBT collector is linked to the plus pole of the DC link and the IGBT emitter to the plus pole of the R/RF unit. The minus pole of the DC link is not taken through the OCP or otherwise connected to it.

When the OCP is commissioned, a check must always be made to ensure that it is correctly installed. Although the system will operate when the OCP is wrongly connected, the unit will not be able to protect the line fuses in the event of a fault.

The OCP does not have an operator panel and is commissioned via the R/RF unit. It is controlled exclusively via a control lead from the CUR on the R/RF device. This shuts down the OCP as soon as inverter commutation failure is detected. As a result of the IGBT turning off, the voltage across the OCP increases so much that the DC link current can decay to zero and the thyristors in the regenerative bridge can recover. A certain safety interval must then elapse before the IGBT is turned on again. The substantial amount of energy that needs to be dissipated during the shutdown process is almost completely converted to heat in varistors. For this reason, the rest time of the OCP (max. 1 minute) prevents it from being shut down more than once in a short period at maximum DC link current. Additional power losses occur on the OCP, i.e. DC link current x diode forward voltage in rectifier operation and DC link current x voltage drop across the IGBT in generator operation. These have only a nominal effect on the efficiency of the R/RF unit.

Explanation of terms:

IGBT = Isolated-**G**ate-**B**ipolar-**T**ransistor, a high-speed semiconductor circuit-breaker

The commutation failure detection signal is supplied via a 2-pole terminal by the CUR electronics board on the R/RF unit.

Fault and alarm are each supplied via a floating relay output (opens under fault conditions).

1.2.1 Actual value sensing, power disconnection on inverter commutation failure

The OCPs do not have their own actual current sensing circuit. The shutdown current is detected on the basis of the IGBT saturation voltage of the IGBT on the one hand and, on the other, the current is disconnected in the event of inverter commutation failure, regardless of the current magnitude, by a signal from the CUR electronics board on the R/RF unit. The CUR and OCP electronics are linked via a shielded connecting cable. It must be possible to loop this connecting cable further on the OCP for any other devices connected in parallel to the R/RF unit (see XKIPP1, Chapter 3.3.3).

1.2.2 Fan monitoring

The OCP fan is driven via an auxiliary contact of the main contactor on the R/RF unit. In this way it can be ensured that it operates only when the R/RF unit has powered up.

An air-flow monitor signals alarms/faults externally via its floating relay contact. This ensures that the system is not shut down in an uncontrolled manner in the event of an OCP fan defect. The contact for the fault message (X9.4 and X9.5) is connected in series with the corresponding contact (X9.4 and X9.5) on the R/RF unit.

1.3 Fuse protection

The OCP is a system component of the 6SE70 drive system. It is not provided with separate fuse protection. Fuse protection is provided in conjunction with the rectifier/regenerative feedback unit and the inverters. Self-protection is generally afforded by the electronically triggered current disconnection function.

1.4 Selection and assignment to R/RF units

The OCP is available for DC links with a maximum rated supply voltage of 3AC 480V +10% (DC link voltage 510V to 650V +10%) or 3AC 690V +15% (DC link voltage 675V to 930V +15%) with 2 rated currents in each case. OCPs for 3AC 690V can be used for DC links with a maximum supply voltage of 3AC 600V +10%.

	OCP type	R/RF unit	R/RF unit
Supply voltage for R/RF unit: 3AC 380V to 480V +10% DC link voltage: 510V to 650V	6SE7041-0TS85-0JA0	6SE7038-2EH85-1AA0	
		6SE7041-0EH85-1AA0	
	6SE7041-8TS85-5JA0	6SE7041-3EK85-1AA0	
		6SE7041-8EK85-1AA0	
Supply voltage for R/RF unit: 3AC 500V to 690V +15% DC link voltage: 675V to 930V	6SE7041-0WS85-5JA0	6SE7037-7HH85-1AA0	6SE7037-7FH85-1AA0
		6SE7041-0HH85-1AA0	6SE7041-0FH85-1AA0
	6SE7042-0WS85-5JA0	6SE7041-3HK85-1AA0	6SE7041-3FK85-1AA0
		6SE7041-5HK85-1AA0	6SE7041-5FK85-1AA0
		6SE7041-8HK85-1AA0	6SE7041-8FK85-1AA0

2 Transport, Unpacking and Assembly

2.1 Transport and unpacking

The units are packed at the manufacturing works. A product packaging label is attached to the box.

Avoid extreme vibrations and hard impacts during transport, e.g. when lowering the unit.

Pay attention to the notes on the packaging relating to transport, storage and proper handling.

The converter can be installed after it has been unpacked and the consignment checked for completeness and damage.

The units are bolted to a pallet and packaged in cardboard.
The packaging may be disposed of in accordance with local cardboard disposal regulations.

You should notify your freight forwarder immediately if you discover any transportation damage.

2.2 Storage

The units must be stored in clean dry rooms. Temperatures between –25 °C (–13 °F) and + 70 °C (158 °F) are permissible. Temperature fluctuations > 20 K per hour are not permissible.

2.3 Assembly

4 M10 screws are required to assemble the units.

See dimension drawing for fastening holes.

	WARNING
	For safe operation of the unit, it is presumed it will be assembled and commissioned by qualified personnel, paying attention to the warning notes given in these operating instructions. Particular note must be taken both of the general and national erection and safety regulations regarding work on power installations (e.g. VDE) and regulations regarding the proper use of tools and of personal protective equipment. Non-observance of warning notices can result in death, severe personal injury or considerable property damage. The unit must be protected against the ingress of foreign matter as otherwise proper functioning and safety will not be guaranteed.

Requirements for the installation site:

Local guidelines and standards must be observed in relation to assembly.

Operating facilities must be dry and dust-free. Air fed in must not contain any gases, vapors or dusts that are electrically conductive or detrimental to functioning. Air containing dust must be filtered.

	WARNING
	Dimension cabinet ventilation according to the dissipated power! (Technical data in Chapter 9)

The unit's ambient climate in operating rooms must not exceed the values of code 3K3 as detailed in DIN IEC 721 Part 3-3 /04.90. A reduction of power as detailed in Chapters 9.1 and 9.2 is necessary in the event of temperatures > 40 °C (104 °F) and altitudes >1000m. The terminal voltage has to be reduced for altitudes > 2000m.

Carry out assembly in accordance with the dimension drawing in Section 2.4.

Dashed-line arrow applies when the OCP is operated with the exhaust air duct removed.

Installation in control cabinets

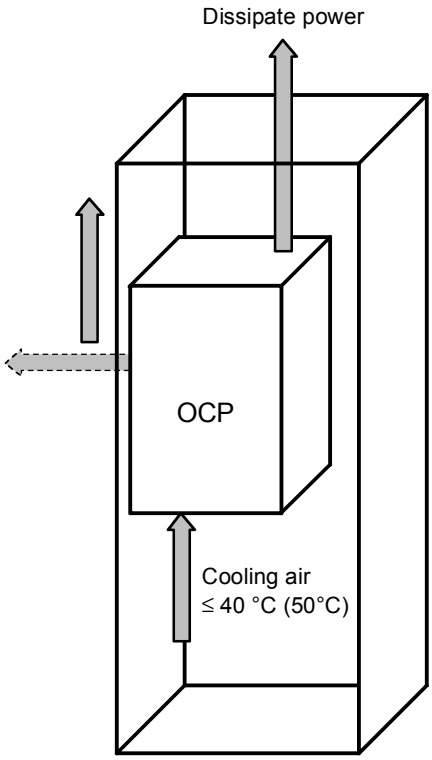

CAUTION
The unit has two exhaust air outlets from which air must be able to exit unhindered! (see dimension drawing)

2.4 Dimension drawing

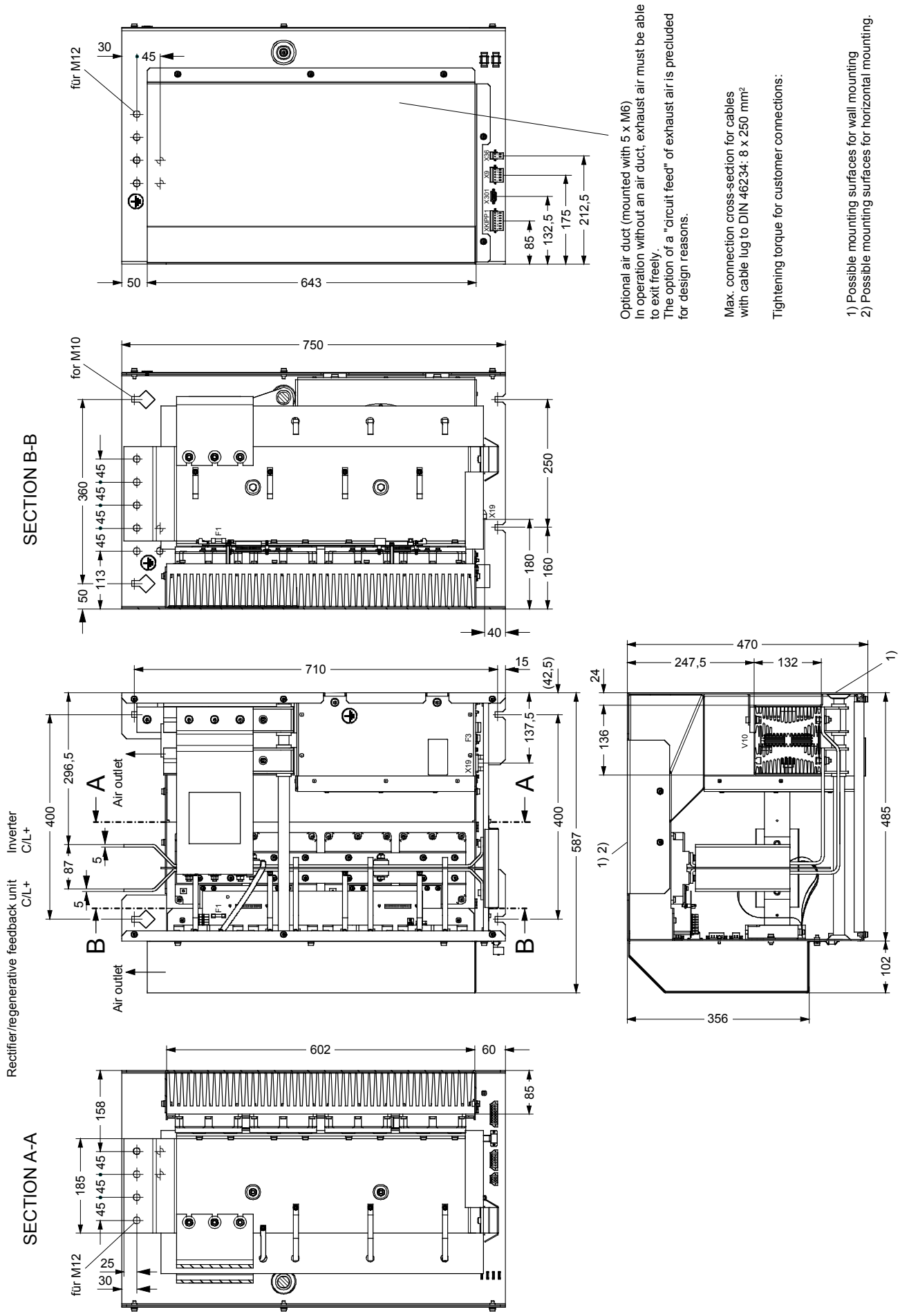

3 Connection

	WARNING
	The units are operated at high voltages. Only carry out connection work after disconnecting the voltage! All work on the unit must only be carried out by qualified persons. Non-observance of warning notices can result in death, severe personal injury or considerable property damage. Damage or destruction can result if the unit is incorrectly connected.
	As the result of the dc link capacitors in the connected SIMOVERT Master Drives, the unit still contains a hazardous voltage up to 5 min. after isolation. This is why it is only permitted to open the unit after observing an appropriate waiting time.
	The power terminals and control terminals may carry a voltage even when the motor is at standstill.
	When working on the open unit, pay attention to the fact that live parts are exposed. The unit may only be operated with the front covers attached.
	The user is responsible for ensuring that the motor, converter, rectifier/regenerating unit, OCP and other units are installed and connected in accordance with the technical regulations recognized in the country of installation (in Germany: VDE, VBG4) and other regionally valid regulations. In doing so, particular attention must be paid to cable dimensioning, fusing, earthing, deactivation, isolation and overcurrent protection.
	CAUTION
	The power cables must be fixed in position mechanically outside the unit.

NOTICE
An external 24 V power supply is required for operation of the units (see Chapter 3.6). Operational range of the unit: 20 V to 30 V.

	WARNING
	The operating coils of contactors and relays that are connected to the same supply network as the unit or that are located in close proximity of the unit must be connected to overvoltage limiters, e.g. RC circuits. Connect the fan power supply to X19. The fan continues to run for about four minutes or until a certain cooling element temperature threshold is undershot (provided its power supply is connected) after the unit has been switched off, following fault messages, on canceling the enable signal and after isolating the system supply connection. Despite switching the voltage off at the power terminals, a voltage may still exist on terminal X19 due to the external fan supply.

3.1 Power connection

Copper terminal bars, horizontal and vertical, backward and upward.

Function	Terminal	Connected loads / Description
DC link R/RF unit	left	4 holes for M12
DC link inverter	right	4 holes for M12
PE conductor	PE/GND	4 holes for M12

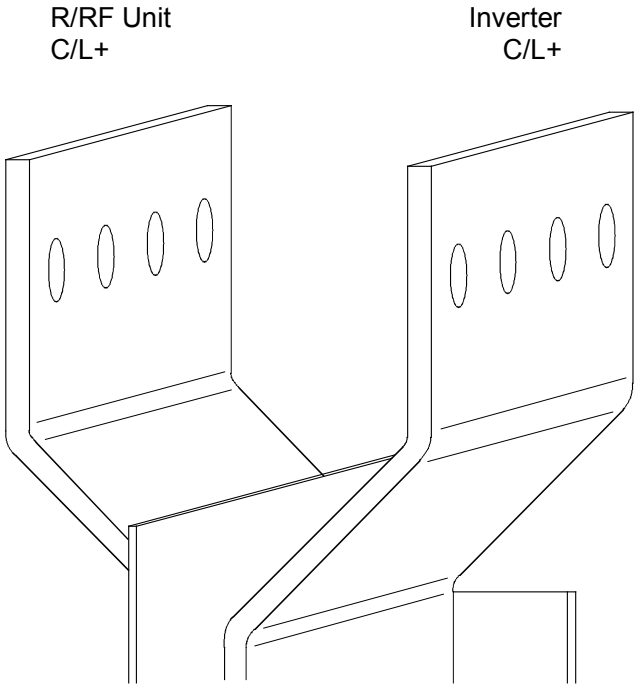

3.2 Fuse protection

CAUTION
The OCP is not separately protected. Fuse protection is provided in conjunction with the rectifier/regenerative feedback unit and the inverters. Self-protection is generally afforded by the electronically triggered current disconnection function.

3.3 Fan connection

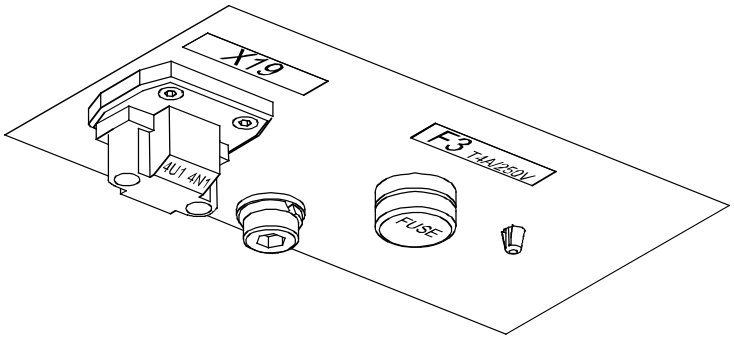

Function	Terminal	Connected loads / Description
Fan terminal X19	4U1 4N1	Supply connection for fan 230V AC ±10%, 50 to 60Hz ±5% Current consumption: at 50 Hz: 2.6 A, at 60 Hz: 3.3 A

Terminal X19 fused with fuse (F3):

T4A/250V time-lag 6,3x32mm (¼" x 1¼")
(19313-T4A/250V Messrs. Wickmann-Werke GmbH)

NOTICE
See Chapter 3.7 "Recommended connection of control" for fan control. To ensure reliable operation of the air-flow monitor, the fan must be operated in unison with the external 24 V power supply. Residual rotation of the fan makes a dropout delay (approximately 15 sec.) on relay K111 advantageous. To facilitate fault identification, the alarm output (relay contact terminal X36) on the OCP can be connected to the binary selector input on the R/RF unit (on the CUR), which is parameterized for external fault messages.

The units are designed for permanent connection to the system in keeping with DIN VDE 0160 Section 6.5.2.1.

Protective conductor connection: Min. cross-sectional area 10 mm^2
The wired cross sections and associated connecting elements must be selected in accordance with the relevant regulations, e.g. DIN VDE 100 Part 523, DIN VDE 0276 Part 1000, UL, CSA, ...

3.4 Power supply and main contactor

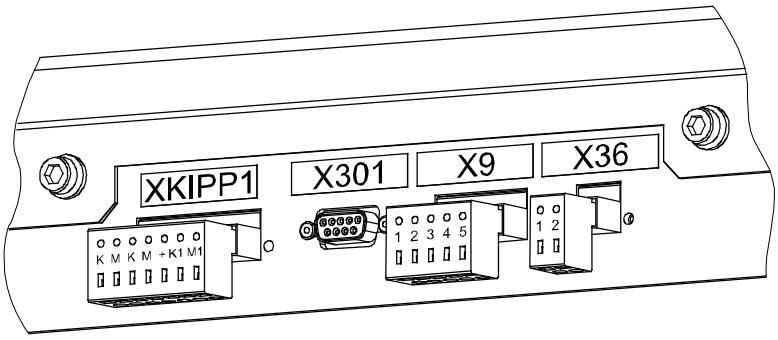

The power supply and main contactor control circuit are connected through five-pin connector X9.

Single-core cables with conductor cross-sections of 0.2 to 2.5 mm^2 (AWG: 24 to 14) can be connected to X9 (finely stranded 1.5 mm^2 with core end ferrules).

Switching voltage: 230V~

Floating contacts X9.4 and X9.5 are connected in series with the corresponding contacts X9.5 and X9.4 of the appropriate R/RF unit (see Chapter 3.7).

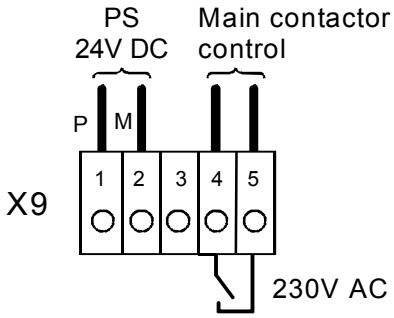

Terminal	Function description
X9-1	DC +24V (tolerance range 17V - 30V) max. current consumption 0,5A at 24V
X9-2	Reference potential for DC X9-1 , electronic ground
X9-3	not connected (N.C.)
X9-4	Main contactor energization (relay contact drops out on fault) Fault: In the case of fan and supply voltage failure 230V~, max. 2A~ at p.f ≥0,4; max. making capacity 3000VA at 30 V DC, max 2A DC
X9-5	Main contactor energization (relay contact drops out on fault) Fault: In the case of fan and supply voltage failure 230V~, max. 2A~ at p.f ≥0,4; max. making capacity 3000VA at 30 V DC, max 2A DC

Terminal X9.1 fused with fuse (F1) T2A/250V time-lag 5x20mm
(19198-T2A/250V Messrs. Wickmann-Werke GmbH or 0034.3993 FSD Messrs. Schurter)

Terminal X9.2 has no fuse protection, the maximum voltage to frame is 30 V.

NOTICE
The coil of the main contactor must be equipped with a surge limiter or RC element.

NOTE
Connector X301 is used solely for internal works diagnostics.

3.4.1 Overtemperature alarm relay

Terminal	Function description
X36-1	Alarm relay (opens in the event of an alarm) Alarm: On overtemperature, IGBT turn-off and supply voltage failure 230V~, max. 2A~ at p.f ≥0,4; max. making capacity 3000VA at 30 V DC, max 2A DC
X36-2	Alarm relay (opens in the event of an alarm) Alarm: On overtemperature, IGBT turn-off and supply voltage failure 230V~, max. 2A~ at p.f ≥0,4; max. making capacity 3000VA at 30 V DC, max 2A DC

3.4.2 Connecting the control leads

	WARNING
	The OCP must be disconnected from the power supply before the control leads are connected.

	CAUTION
	The board contains electrostatically sensitive components. Failure to handle boards correctly can easily cause irreparable damage to these components. See also under the measures recommended to protect ESD-endangered components in the introductory chapter entitled "General".

NOTICE

When installed, control leads must be shielded and isolated from the power cables, laying them at a minimum spacing of 20 cm. The shield must be connected at both ends. The shield is attached to the housing by means of shielding clamps. The diagram below explains how to handle the shielding clamps.

If they intersect, control and power cables must be run at an angle of 90° to each other.

The OCP receives a control signal from the electronics board (CUR) on the R/RF unit. Only version 13 or later of the CUR board can supply the signal. Earlier CUR boards do not have the required signal output.

The device software installed on the R/RF units must be version 4.5 or later. It is particularly important to install the correct SW version when retrofitting equipment on existing systems.

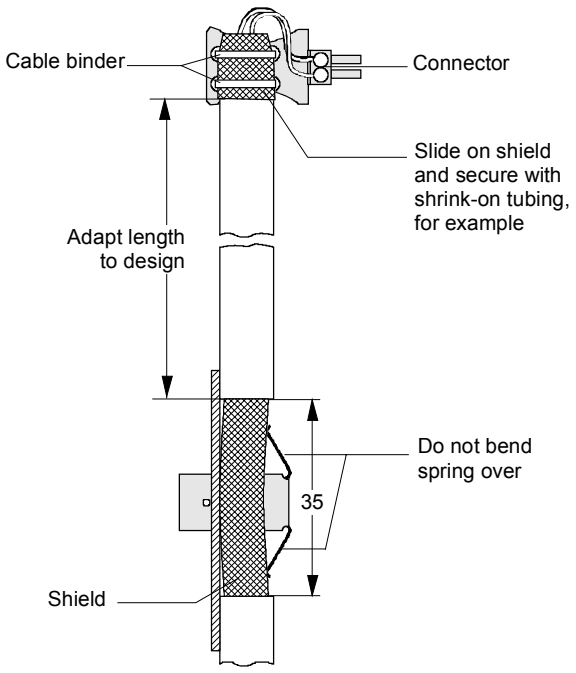

Fitting the shielding clamp

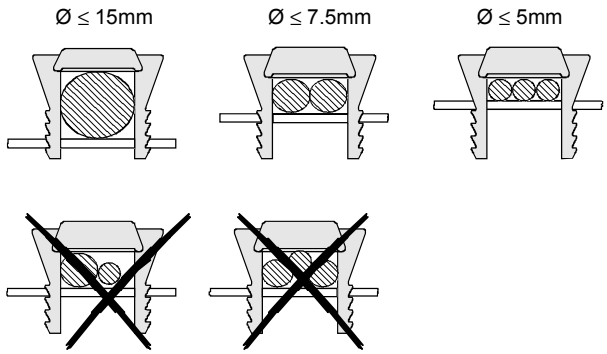

Releasing the shielding clamp

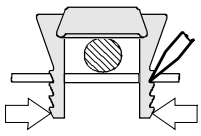

manually or using a screwdriver, press the clamp together and extract it in the updown direction.
Caution!
The clamps are sharp-edged!

The Overcurrent Protector can be controlled via the following interface:

3.4.3 Control terminal strip XKIPP1 on underside of device

Inputs 1-2 and 4-5 are differential inputs with a common-mode range of ± 20 V and an internal impedance of 10 to 20 kiloohms.

XKIPP1		Connected loads / Description
K	input	Control signal from R/RF unit CUR < 1 V = OCP off > 4 V = OCP on
M	input	Reference potential ground of R/RF unit CUR
K	output	Parallel control signal from R/RF unit CUR < 1 V = OCP off > 4 V = OCP on for parallel OCP
M	output	Parallel reference potential ground of R/RF unit CUR for parallel OCP
+	output	+12 V across 4.7 kohms
K1	input	Parallel device: Control signal from R/RF unit CUR < 1 V = OCP off > 4 V = OCP on
M1	input	Parallel device: Reference potential ground of R/RF unit CUR

3.5 Measures for keeping to RFI suppression regulations

So that you can observe the radio interference regulations, you must note the following points:

- **Grounding**
  The converter necessarily generates radio interference as it functions. It is necessary to return them to source via a connection with as low resistance as possible (cross-sectional area of ground connection ≥ cross-sectional area of network connection).
  Use the best grounding opportunity when installing the infeed unit and optional radio interference suppression filters (e.g. mounting plate, grounding cable, ground bus). Interconnect all conductive housings with a large contact surface.
  For interference suppression not only the cross-sectional area (observe safety regulations in case of fault), but especially the contact surface is important because high-frequency interference currents do not flow through the entire cross-sectional area but mainly along the outside skin of a conductor.
- **Shielding**
  To reduce interference and observe the radio interference suppression levels,
  - shielded cable must be used between the converter output and the motor and
  - shielded control cables laid.

  The shield must be connected to ground potential at both ends.

NOTICE

Perform hipot tests on systems with radio interference suppression filters with direct voltage because of the filter capacitors!

Control cables that are directly connected with the converter are always shielded so that the highest possible interference immunity is achieved. The shield must be grounded at both ends.

To avoid coupled interference, control cables directly connected to the device must be routed separately from power cables. Minimum distance 20 cm.

If converters are installed in systems by authorized workshops, interference immunity can be ensured by other suitable wiring practices.

See also "SIMOVERT MASTERDRIVES Installation instructions for design of drives in conformance with EMC regulations“ under "Documentation" on the SIMOVIS CD-ROM of the inverter or converter "compendium" Chapter 3.

3.6 Schematic diagram

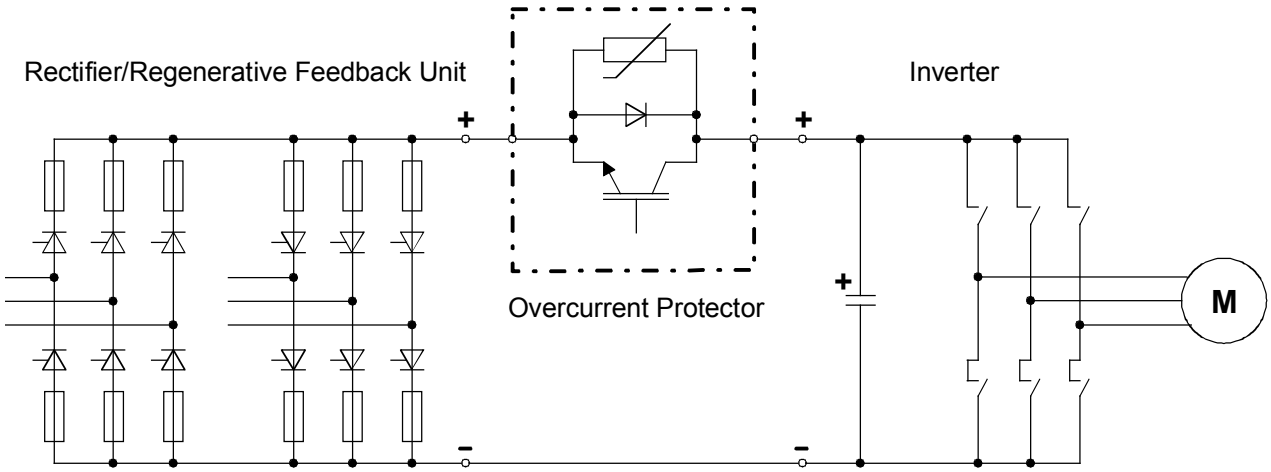

3.7 Recommended connection of control

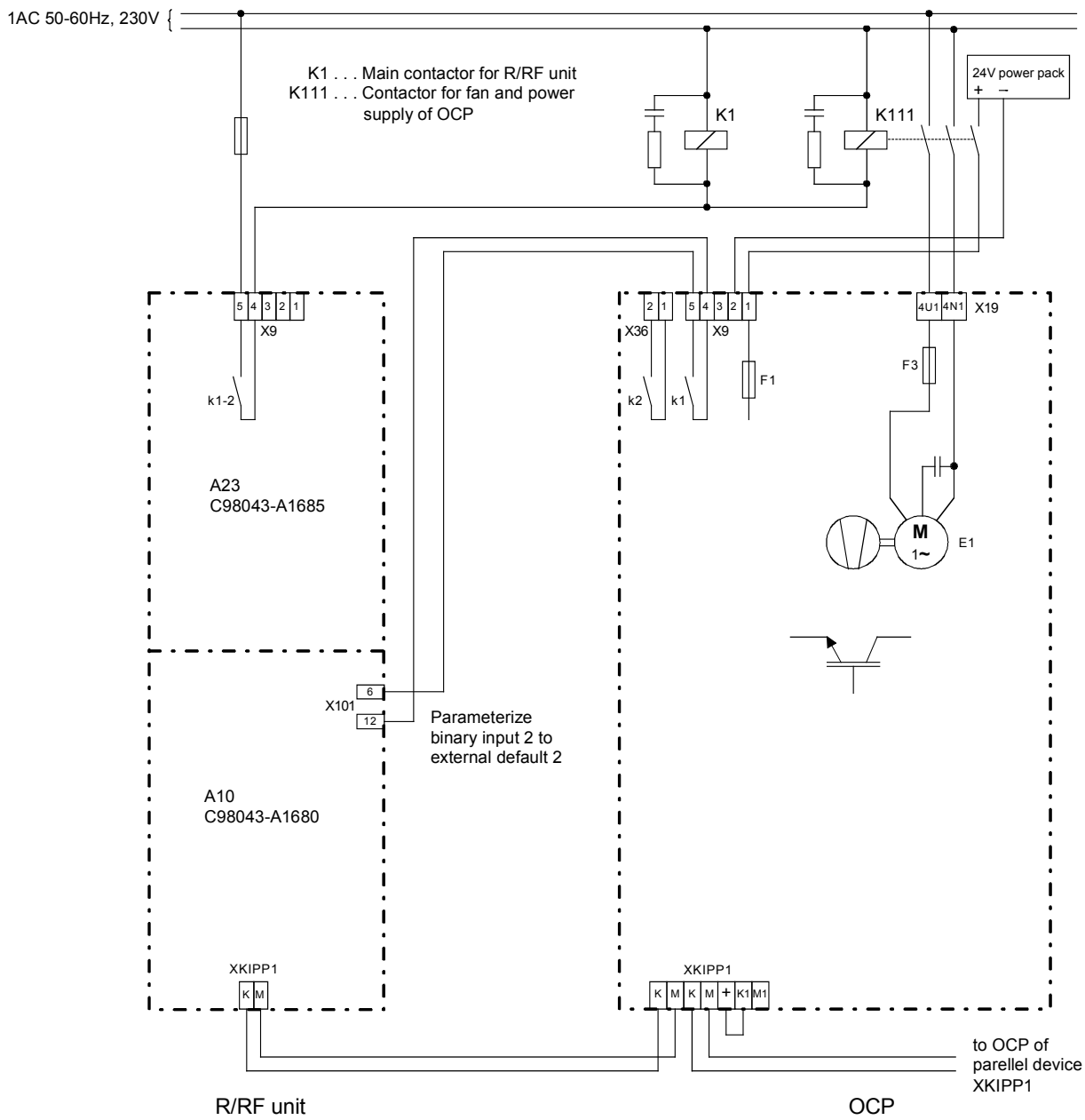

3.8 Power sections

3.8.1 OCP type: 6SE7041-0TS85-5JA0

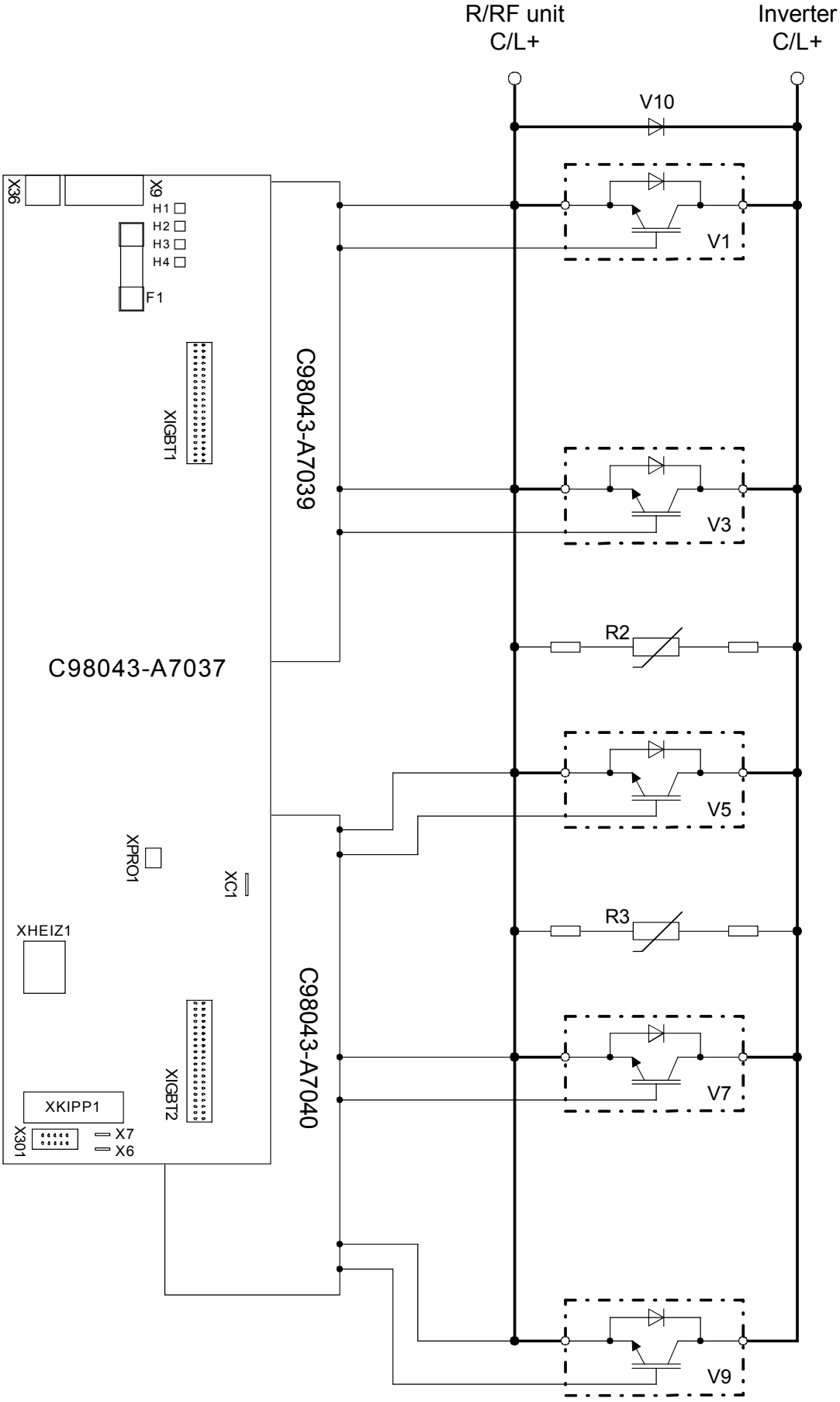

3.8.2 OCP type: 6SE7041-8TS85-5JA0

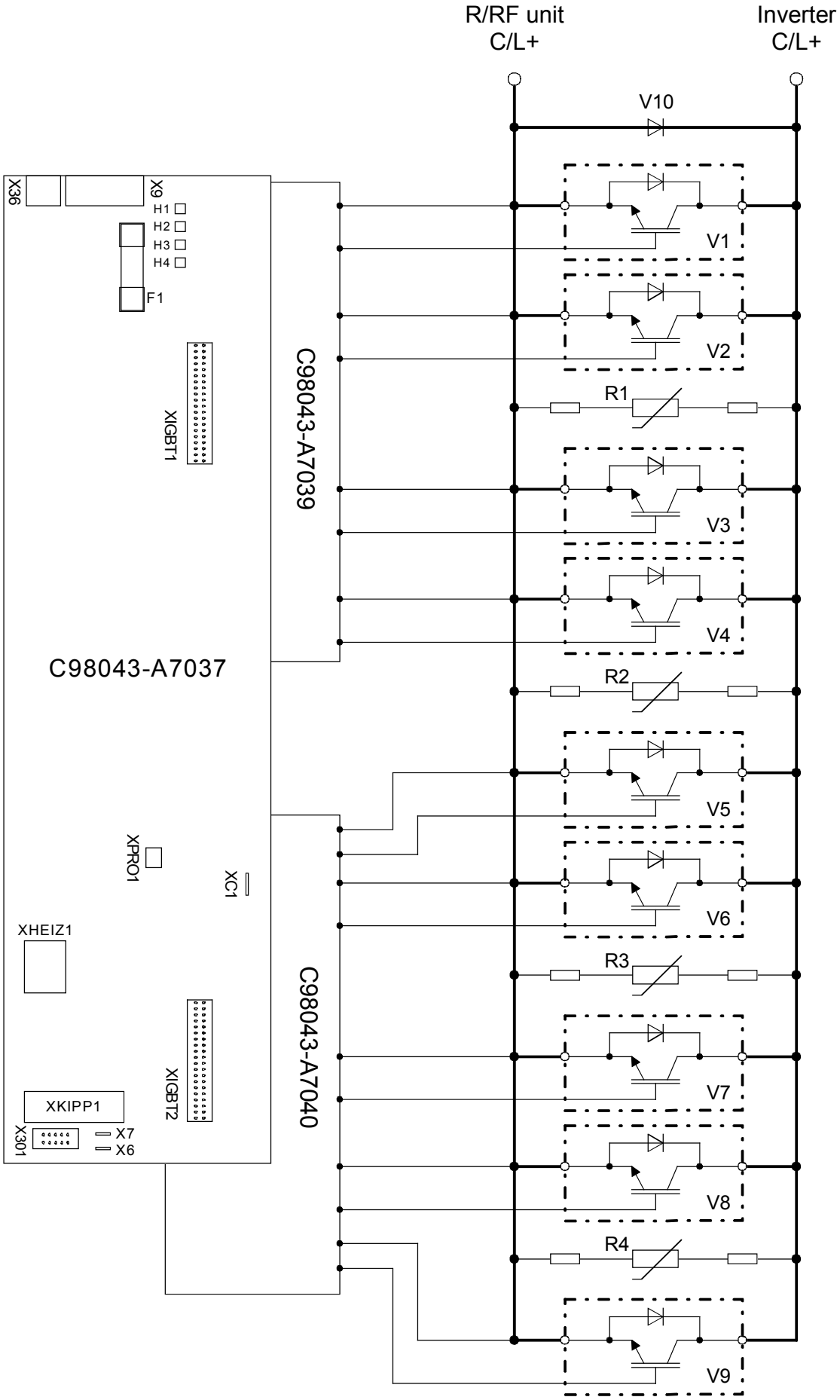

3.8.3 OCP type: 6SE7041-0WS85-5JA0

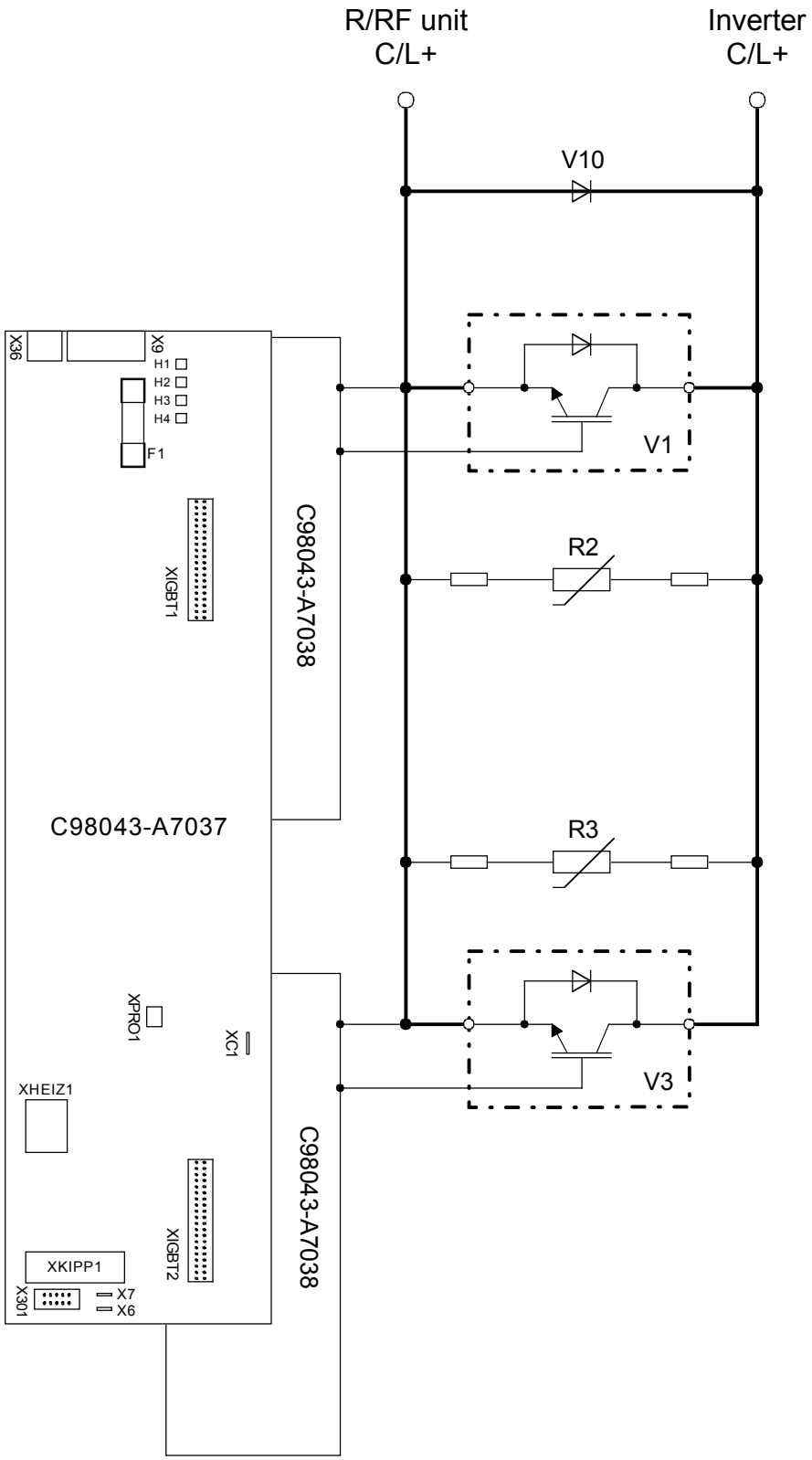

3.8.4 OCP type: 6SE7042-0WS85-5JA0

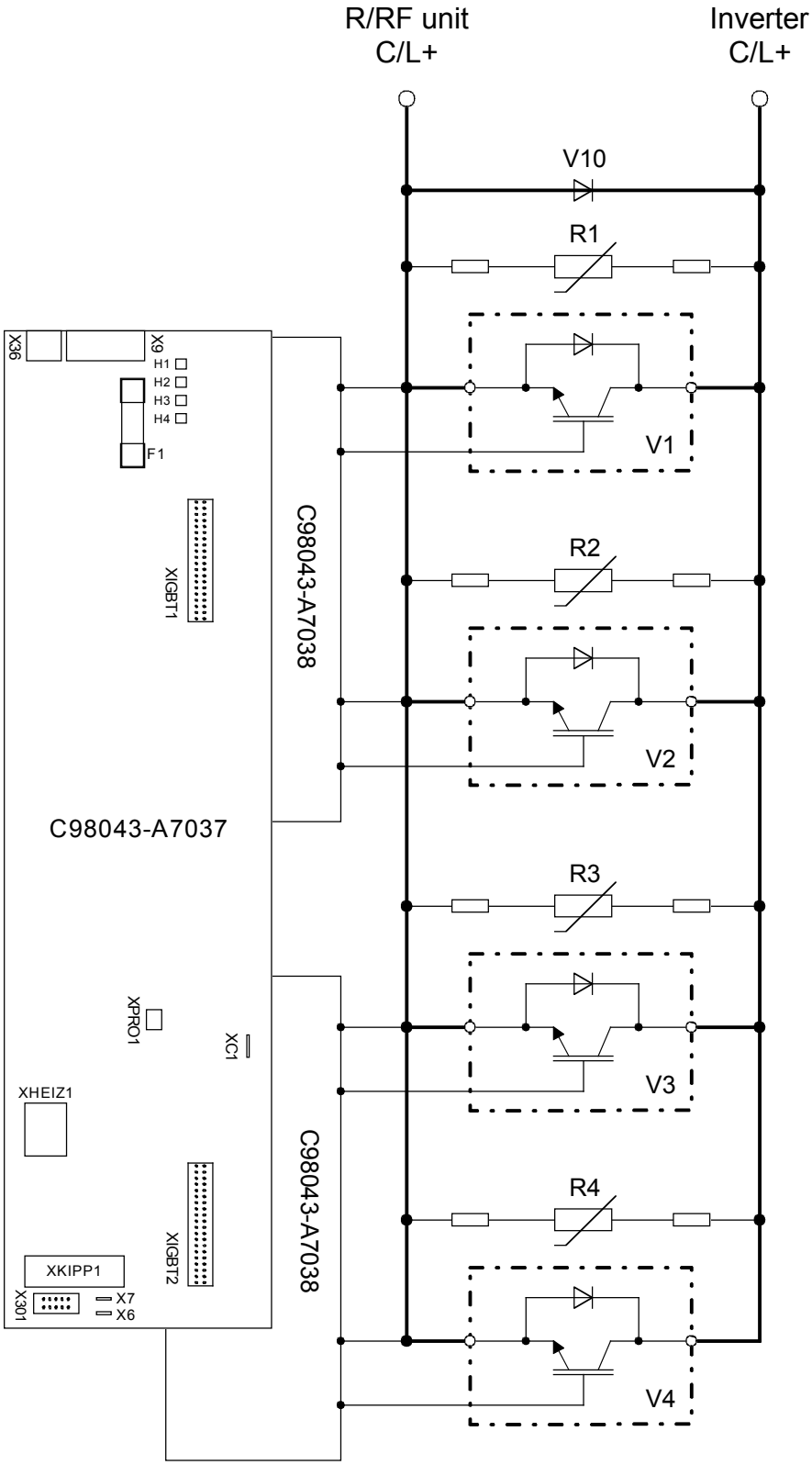

3.9 6- and 12-pulse parallel connection with OCP

For further information about parallel connections and 12-pulse connections, see Chapters 3.7 and 3.8 respectively of the R/RF unit operating instructions.

To increase the output current, it is possible to connect up to 2 "parallel devices" of identical rated current in parallel with the power section of a rectifier/regenerative unit of construction type K ("basic unit").

Each of these devices requires its own OCP in the DC link cable. Both devices are connected in parallel via the control leads to terminal XKIPP1 on the OCP.

3.9.1 Block diagrams with recommended connections for parallel connection with OCP

3.9.1.1 6-pulse parallel connection

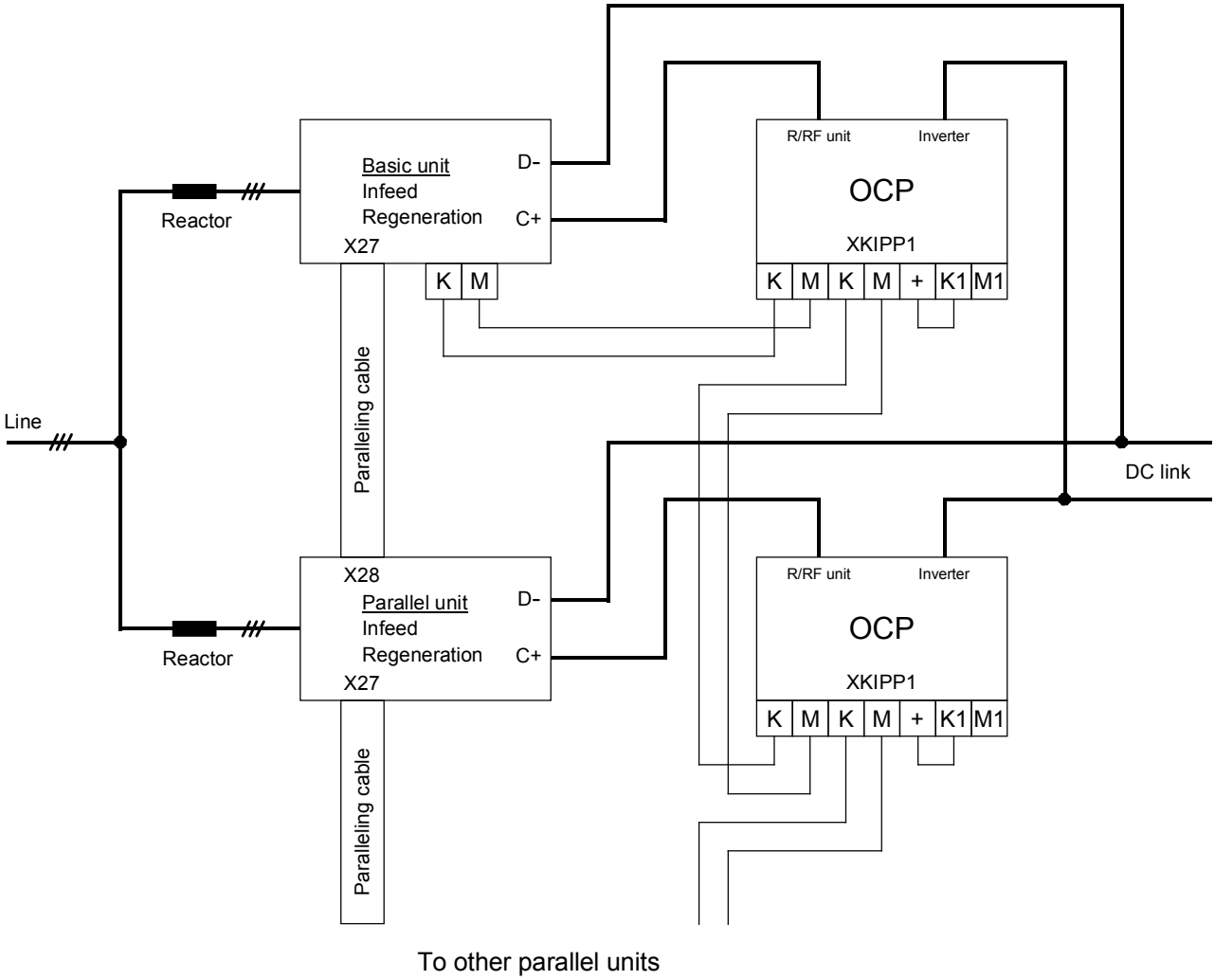

3.9.1.2 12-pulse parallel connection

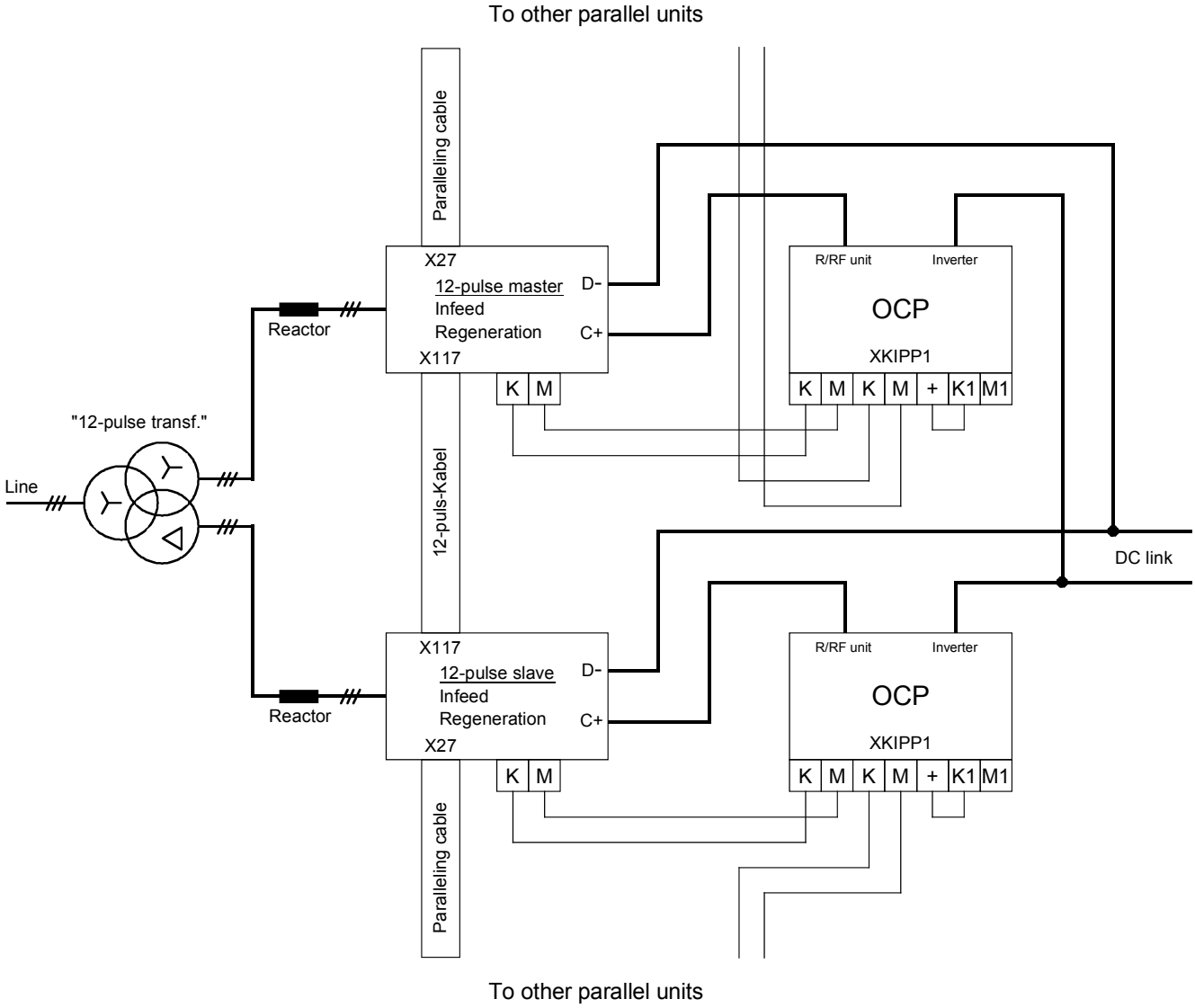

3.9.1.3 12-pulse parallel connection with an OCP

With 12-pulse connections, a common OCP can be used for both R/RF units provided that the sum of the rated currents of the individual units does not exceed the rated current of the OCP.

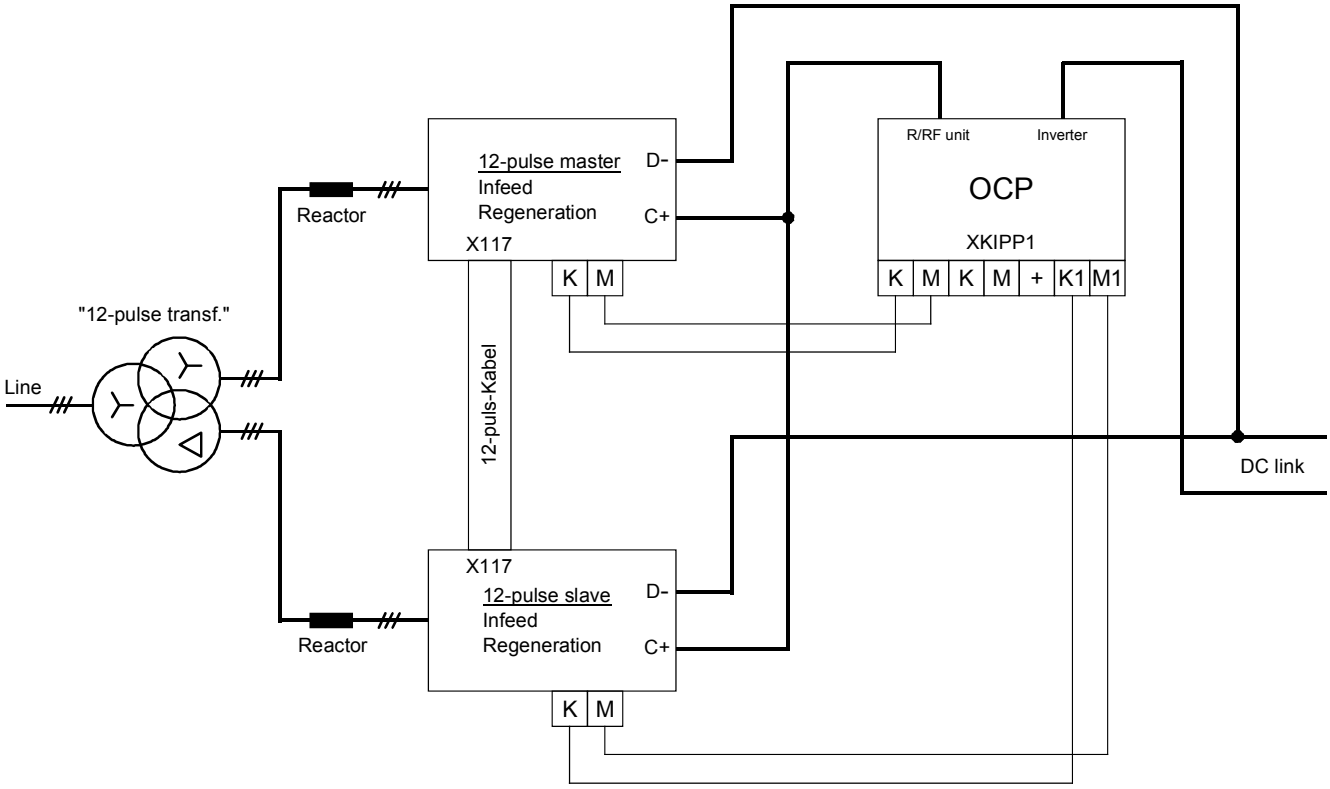

Redundant operation is no longer an option since the failed R/RF unit shuts down the OCP via terminals K and M.

4 Start-Up

4.1 Introduction and general start-up instructions

	WARNING
	Even when the power terminals are isolated, terminal X19 may still be live as a result of the separate fan power supply.

4.1.1 General explanation of terms and functionality

The OCP is an optional add-on to systems comprising a line-side R/RF unit and the inverters connected to the DC link. The power section of the OCP is positioned between the positive DC link power section connection on the R/RF unit and the positive DC busbar to which the inverters are connected. The OCP power section consists of a diode in the DC link current supply direction. In the regeneration direction, it is capable of opening the DC link by turning off an IGBT. This system prevents fuses from tripping in cases where a so-called "inverter commutation failure" occurs as a result of a line voltage failure or dip in generator mode.

The DC link is opened in the regeneration direction in the following cases:

- Automatically, i.e. initiated by the OCP control itself if the regeneration current across the IGBT on the OCP exceeds a particular value, i.e. the self-tripping threshold of the OCP.

  When the IGBT is turned off, the level between terminals K and M on control terminal strip XKIPP1 switches to "low", so as to allow the tripping command to be "connected through" to parallel power sections if appropriate.
- Externally tripped if the level between terminals K and M switches to "low" on control terminal strip XKIPP1.

  Source for external tripping in this case can be either the R/RF unit or the OCP in a parallel circuit if the power sections are connected in parallel.

  Note: The R/RF unit is capable of detecting "inverter commutation failure" even before the regeneration current has reached the self-tripping threshold of the OCP. It signals this in response to low level between terminals XKIPP1.K and M on the CUR board.

Correct connection and start-up of the OCP is a precondition for starting up the R/RF unit on the supply side.

4.2 Initial start-up

4.2.1 Preparatory measures

- Shipment, unpacking, assembly: See Chapter 2
- Read warnings at the beginning of Chapter 3 ("Connection")
- Connection: See Chapter 3

NOTE
The floating contacts X9.4 and X9.5 on this device must be incorporated in series with contacts X9.4 and X9.5 of the R/RF unit in the control circuit for the main contactor which connects the supply R/RF unit to the system (see also the block diagrams with recommended connections in Chapter 3.7).

- Connect the incoming supply and/or electronics power supply for the OCP with the front panel closed.
- No further start-up measures or settings are required for the OCP.
- The supply R/RF unit must now be started up according to the relevant operating instructions.
- Once the supply R/RF unit has been started up, it is advisable to perform a function test as described in Chapter 4.2.2

4.2.2 Checking the correct connection of the power section

If the supply R/RF unit has been started up successfully, i.e. if no error messages were generated when the "circuit identification" procedure was performed on the R/RF unit, then it can be safely assumed that the OCP is allowing current to flow in both the infeed (rectifier) and regeneration directions. The diode is conducting in one direction and the IGBT in the other direction of the DC current.

In order to check, however, that the power section input and output connections on the OCP are not reversed, i.e. that the DC link current is flowing across the IGBT in the regeneration direction, it is advisable to perform the following test on the OCP after the supply R/RF unit has been started up.

- Connect terminals K and M on control terminal strip XKIPP1 of the OCP for this test only (this causes the IGBT on the OCP to "turn off")
- Switch on (ON command) the supply R/RF unit
  Note: The inverters connected to the DC link must not yet be enabled.
- If the DC link now charges, it can be safely assumed that the diode on the OCP is working correctly in the infeed direction.
  If the power section connections on the OCP were reversed, it would not be possible to charge the DC link capacitors.
- Switch off (OFF command) the supply R/RF unit.
- If the DC link capacitors of the connected inverters now discharge freely, i.e. without current flow in regeneration direction through the R/RF unit, it can be assumed that the IGBT on the OCP has actually opened the regeneration circuit.
- Open the connection between terminals K and M on control terminal strip XKIPP1 on the OCP for normal operation

5 Fault and Alarm Messages

An active fault or alarm is displayed by means of LEDs H1 and H2 respectively on the control board (C98043-A7037).

5.1 LED displays on board A7037

LED	Text on PCB	Description
H1 amber	Temp. alarm	Lights up when alarm temperature threshold of air-flow monitor is reached
H2 red	Temp. fault	Lights up when fault temperature threshold is reached
H3 green	Supply OK	Lights up when electronics supply voltage is higher than 17 V
H4 green	IGBT ON	Lights up when the IGBT is in the on-state

5.2 Position of display LEDs on board A7037

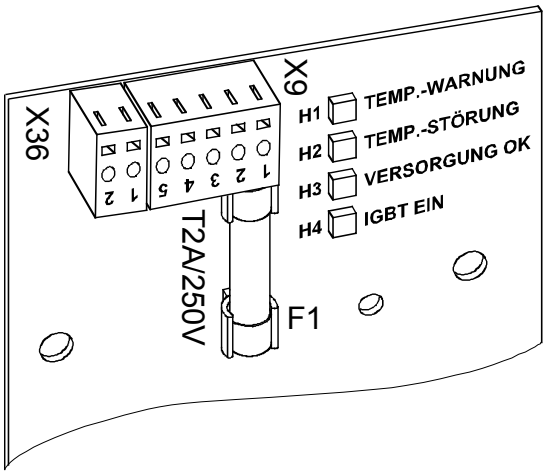

6 Maintenance

	WARNING
	The OCP is operated at high voltages in conjunction with SIMOVERT Master Drives rectifier/regenerative feedback units. All work on the unit must be carried out in agreement with the national electrical regulations (in Germany: VBG 4). Maintenance and repair work must only be carried out by qualified personnel.
	Use must only be made of the spare parts approved by the manufacturer. It is imperative to observe the prescribed maintenance intervals and the repair and replacement instructions. As the result of the dc link capacitors in the connected SIMOVERT Master Drives, the unit still contains a hazardous voltage up to 5 min. after isolation (power terminal and electronic power supply). This is why it is only permitted to open the unit after observing an appropriate waiting time. The power and control terminals may still be live even in the event of motor standstill. Despite disconnecting the power terminals from the supply, terminal X19 may still be live due to the external fan supply.
	If work on the activated unit is necessary: ♦ do not touch any live parts. ♦ use only proper measuring equipment and protective work clothing. ♦ stand or sit on an unearthed and isolated surface that does justice to ESD requirements. The interface connection X301 is used for diagnostic purposes only. Connect only when the power section is enabled. Non-observance of warning notices can result in death, severe personal injury or considerable property damage.

You should know the order and factory numbers of your unit when consulting the service department. You will find these numbers and other important data on the rating plate of the unit.

6.1 Maintenance recommendations

The fans are designed for a service life of 40 000 hours at an ambient temperature of T_U = 40 °C. To guarantee the availability of the unit at all times, the fans must be replaced in good time.

If the fan on the connected R/RF unit is replaced as part of the maintenance schedule, we would recommend that the fan on the OCP be exchanged at the same time.

6.2 Replacing components

6.2.1 Replacing the fan (E1)

	WARNING
	The fan must only be replaced by qualified personnel. Because of the DC link and snubber capacitors in the connected inverters, a hazardous voltage is present for another 5 min after isolation. When dismantling the fan-mounting box, please remember that it weighs 15 kg. Non-observance of warning notices can result in death, severe personal injury or considerable property damage.

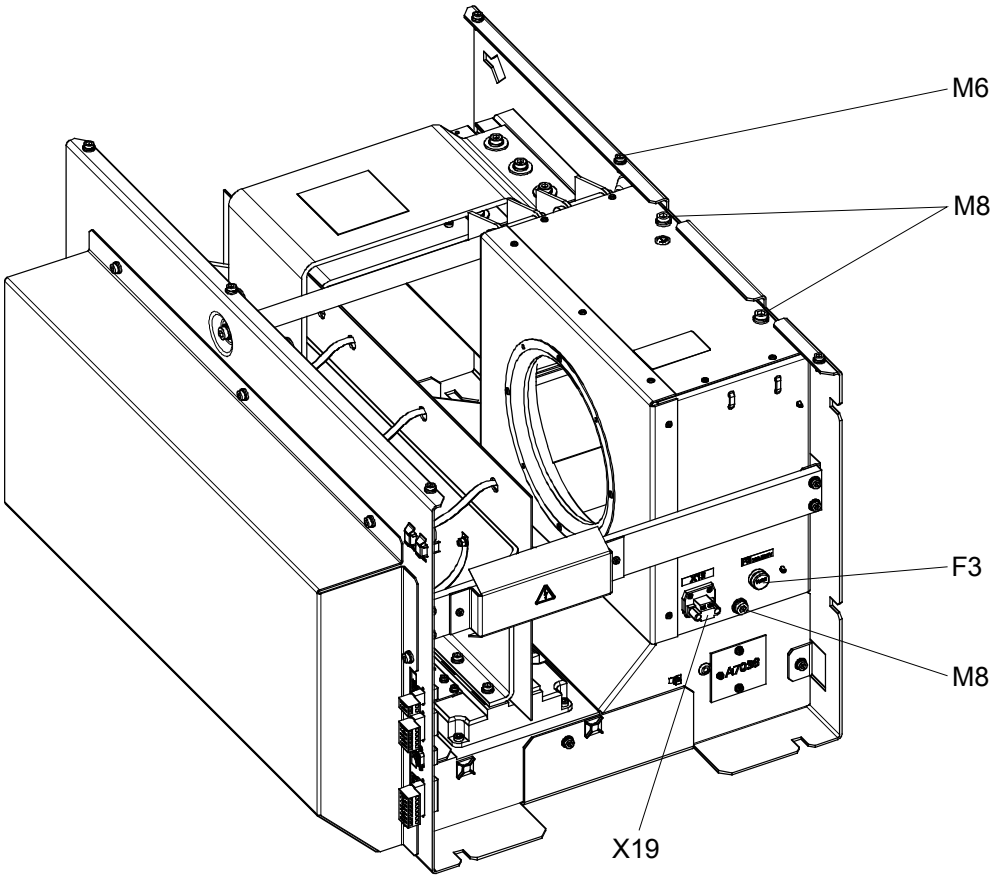

The fan is mounted in the fan box on the bottom of the unit.

- Unscrew the 6 M6 (T20) Torx mounting screws and remove the unit cover plate.
- Remove connector X19.
- Undo the 3 M8 (T30) Torx mounting screws.
- Swing the fan box away from the housing side panel and pull it out towards you.
- Follow the same steps in the reverse order to re-install the fan box.

NOTICE
The M8 mounting screws also serve to ground the fan box. They must therefore be tightened properly again (tightening torque 25Nm).

6.2.2 Replacing modules

	WARNING
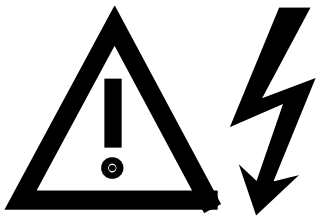	Modules must only be replaced by qualified persons. Modules must not be removed or inserted under a live voltage. Non-observance of warning notices can result in death, severe personal injury or considerable property damage.

	CAUTION
	The modules contain electrostatically sensitive devices. You must discharge your own body before touching an electronic module. This is best done by touching a conductive earthed object (e.g. a bare metal part of the control cabinet) directly beforehand.

6.2.2.1 Connection of fan monitor on boards A7037 and A7036

XHEIZ1	Connected loads / Description
1	+ 12 V infeed (consumption approx. 200 mA)
2	Reference potential ground
3	Heater OK (high = OK, low = fault)
4	Heater ON (switching thresholds: < 4 V = heater off, > 7 V = heater on)

6.2.2.2 Position of connecting elements and LEDs on board A7037

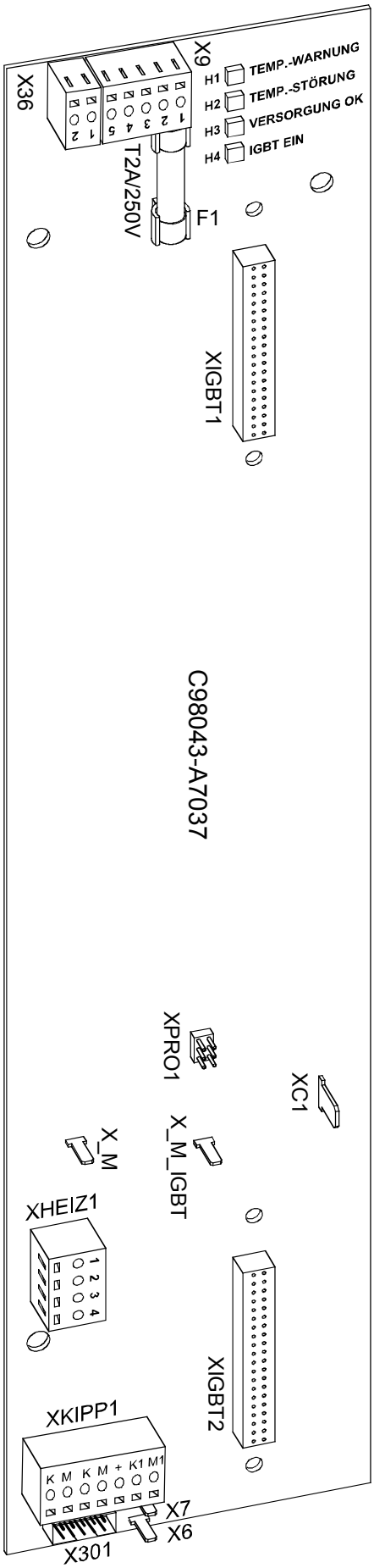

X36
Internal connector
Overtemperature alarm relay

X9
Internal connector
24 V DC electronics power supply and main contactor control

H1 to H4
LEDs for displaying operational status

XIGBT1:
Internal connector
for controlling IGBTs

XC1:
Internal connector
for voltage sensing

XPRO1:
Internal connector

XM and X_M_IGBT:
Internal connectors

XHEIZ1:
Internal connector
for air-flow monitoring

XIGBT2:
Internal connector
for controlling IGBTs

XKIPP1:
Internal connector
Control lead from R/RF unit and to parallel devices

X6 and X7
Internal connector
Temperature sensor

X301:
Internal connector
Diagnostic terminal

6.2.3 Replacement of IGBTs

The IGBTs are mounted by means of self-tapping screws. When they are replaced, the mounting surfaces on the heatsink must be cleaned and a new layer of thermo-lubricant applied to the IGBT. It is absolutely essential that you use metric thread screws of the same length as the originals as well as locking elements (plain washer and spring washer).

CAUTION
You must always use the original IGBT types!

NOTICE
The layer of thermo-lubricant (silicone-free, type H-T-C made by Electrolube) applied to the modules must be so thin and even that the baseplate is still clearly visible underneath! It is essential to tighten the IGBT module mounting screws in the correct sequence, as shown in the diagram below.

IGBT type	
SKM 500 GA 174 DS	CM 800 HB-50H
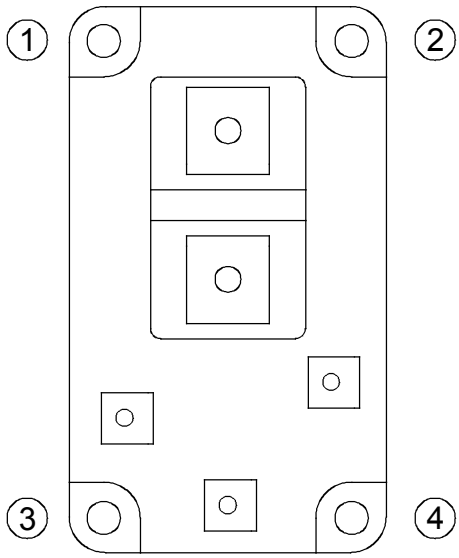	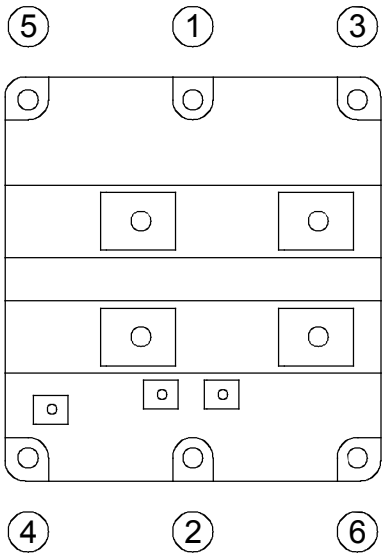
Tightening torque on IGBT: 5Nm Tightening torque on busbars: 5Nm	Tightening torque on IGBT: 5Nm Tightening torque on busbars: 13Nm

6.2.4 Replacement of varistors (R1 to R4 or R2+R3)

The varistors must be replaced in sets.

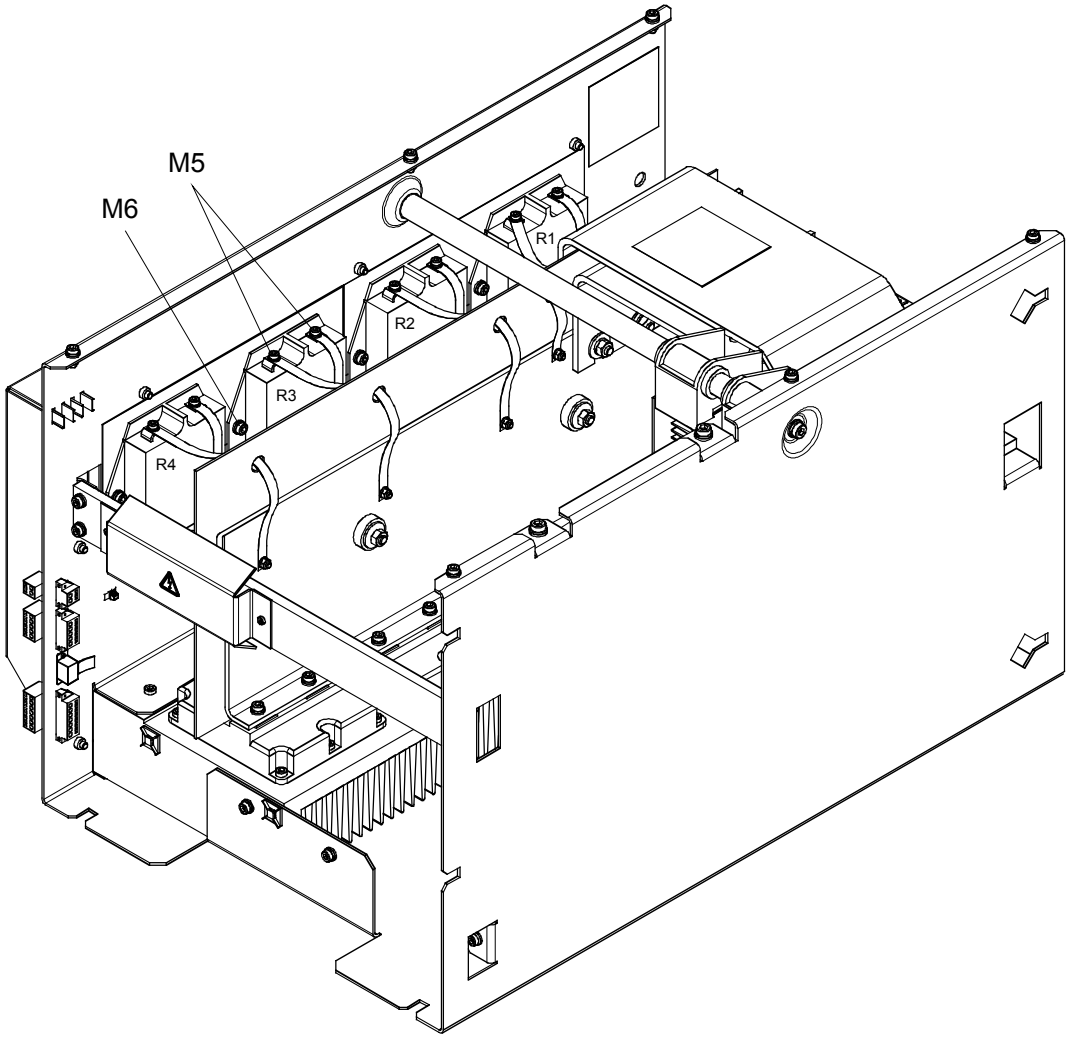

- Disconnect the two resistor leads from the varistor by undoing the two M5 mounting screws (cross recessed).
- Unscrew the two Torx M6 (T20) mounting screws from the varistor and pull the varistor out forwards.
- Mount the replacement varistor in the reverse order.

  Tightening torque
  for M5 mounting screws: 1.5Nm
  for M6 mounting screws: 6 Nm

6.2.5 Replacement of diode assembly (V10)

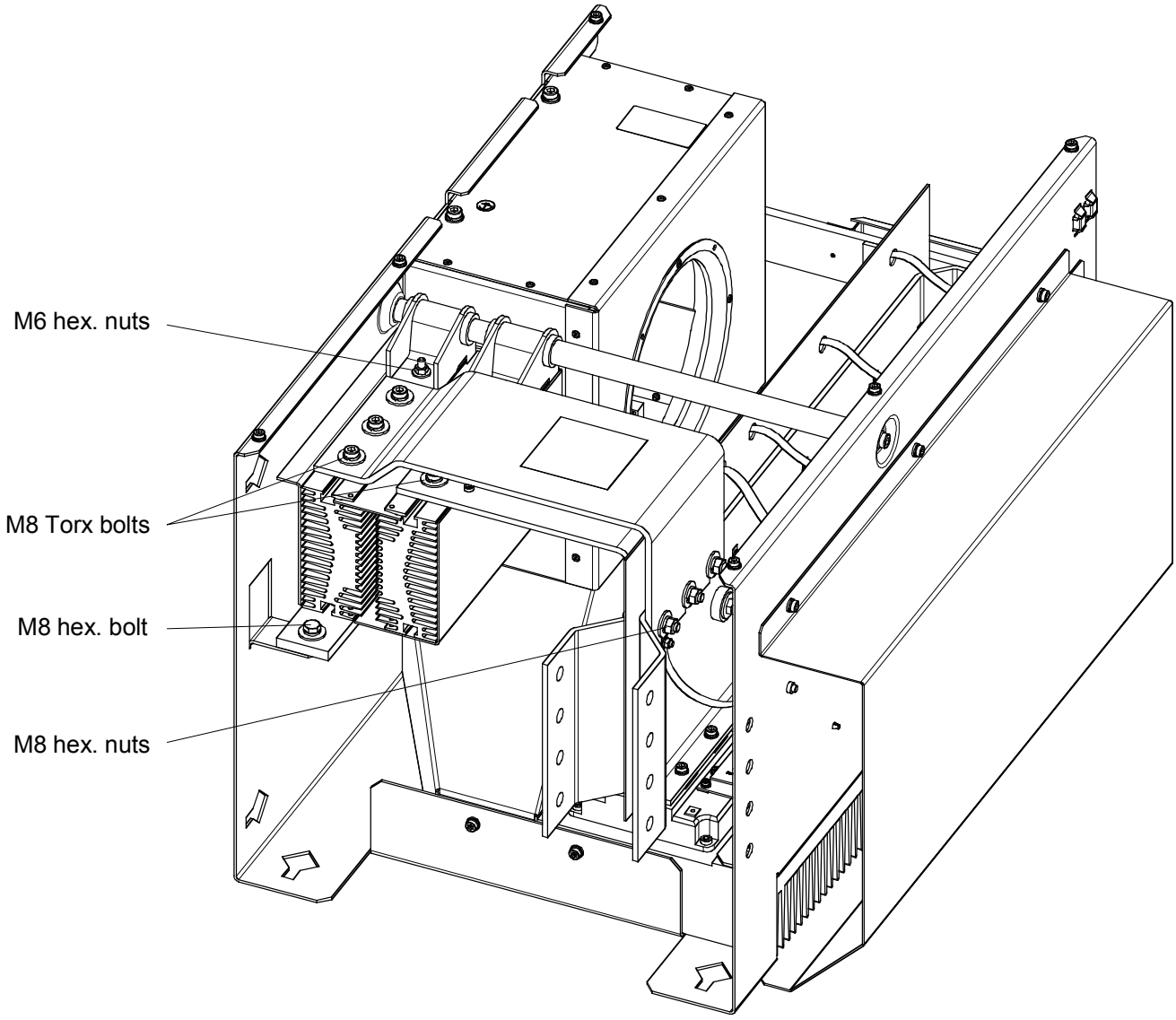

- Remove the two busbars by undoing the 3 M8 (T30) Torx bolts and 3 M8 hexagon nuts (width over flats 13) on each.
- Undo the M8 hexagon bolt (width over flats 13).
- Loosen the two M6 hexagon nuts (width over flats 10) (hinge).
- Pull out the diode assembly forwards and upwards.
- Install the replacement diode assembly in the reverse order.

  Tightening torque
  for M6 nuts: 6Nm
  for M8 bolts and nuts: 15Nm

7 Spare-parts

Equipment identifier	Designation	Order number	Used in
A7036	FBG Air flow monitoring	6SY7010-7AB00	all unit types
A7037-L1	FBG Control Board	6SY7010-7AB01	6SE7042-0WS85-5JA0 6SE7041-0WS85-5JA0
A7037-L2	FBG Control Board	6SY7010-7AB02	6SE7041-8TS85-5JA0 6SE7041-0TS85-5JA0
A7038	FBG Connector Board 1	6SY7010-7AB03	6SE7042-0WS85-5JA0 6SE7041-0WS85-5JA0
A7039	FBG Connector Board 2	6SY7010-7AB04	6SE7041-8TS85-5JA0 6SE7041-0TS85-5JA0
A7040	FBG Connector Board 3	6SY7010-7AB05	6SE7041-8TS85-5JA0 6SE7041-0TS85-5JA0
V1 to V9	IGBT	6SY7010-0AA72	6SE7041-8TS85-5JA0
V1, V3, V5, V7, V9	IGBT	6SY7010-0AA72	6SE7041-0TS85-5JA0
V1 to V4	IGBT	6SY7010-0AA71	6SE7042-0WS85-5JA0
V1, V3	IGBT	6SY7010-0AA71	6SE7041-0WS85-5JA0
V10	Diode assembly	6SY7010-1AA06	6SE7041-8TS85-5JA0 6SE7042-0WS85-5JA0
V10	Diode assembly	6SY7010-1AA07	6SE7041-0TS85-5JA0 6SE7041-0WS85-5JA0
R1 to R4	Varistor - quartet	6SY7010-3AA16	6SE7041-8TS85-5JA0
R1 to R4	Varistor - quartet	6SY7010-3AA17	6SE7042-0WS85-5JA0
R2, R3	Varistor - duo	6SY7010-3AA18	6SE7041-0TS85-5JA0
R2, R3	Varistor - duo	6SY7010-3AA20	6SE7041-0WS85-5JA0
F1	Fuse-link	6SY7010-2AA01	all unit types
F3	Fuse-link	6SY7010-2AA25	all unit types
E1	Fan (complete)	6SY7010-7AA15	all unit types

8 Environmental Compatibility

Environmental aspects during development

The number of parts has been reduced substantially by the use of highly integrated components and by a modular structure of the complete converter series. This reduces energy consumption during production.

Particular attention was paid to reducing volume, mass and type diversity of the metal and plastic parts.

Plastic parts used:	PC:	Front cover Busbar insulation
	PP:	Hinge
	PA6:	Terminal housing

Flame arresters containing halogen and insulating materials containing silicone have been replaced by pollutant-free materials in all components.

Environmental compatibility was an important criterion in the selection of externally source items.

Environmental aspects during production

Externally sourced items are mainly transported in returnable packaging. The packaging material itself is recyclable, consisting mainly of cardboard and untreated wood.

With the exception of galvanized housings, surface coatings have not been applied.

SMD components are used on the printed-circuit boards.

Production is emission-free.

Environmental aspects of disposal

The unit can be dismantled into recyclable mechanical components by means of easily removable screw and snap joints.

The PC boards can be disposed of thermally. The number of components containing hazardous substances is only slight.

The recyclable plastic parts are designated in accordance with DIN 54840 and marked with the recycling symbol.

9 Technical Data

In the event of conditions of use other than those listed in this chapter, please contact your local Siemens branch or national subsidiary.

Coolant temperature		0 °C to +40 °C
Storage temperature		– 25 °C to +70 °C
Transport temperature		– 25 °C to +70 °C
Environmental class	3K3	DIN IEC 721-3-3 / 04.90
Soiling	2	DIN VDE 0110 Part 1 / 01.89 moisture not permitted
Overvoltage category (power section)	III	DIN VDE 0110 Part 2 / 01.89
Overvoltage resistance class (with converter connected)	1	DIN VDE 0160 / 04.91
Type of protection	IP00	DIN VDE 0470 Part 1 / 11.92 ≙ EN 60529
Interference immunity		IEC 801-2, IEC 801-4
Mechanical strength		DIN IEC 68-2-6 / 06.90

	Frequency range Hz	Constant amplitude of deflection mm	 acceleration m/s^2 (g)
– stationary use	10 to 58	0.075	
	more than 58 to 500		9.8 (1)
– during transport		3.5	
			9.8 (1)

The units can also be operated in load class II. The permissible values must be taken from the following tables.

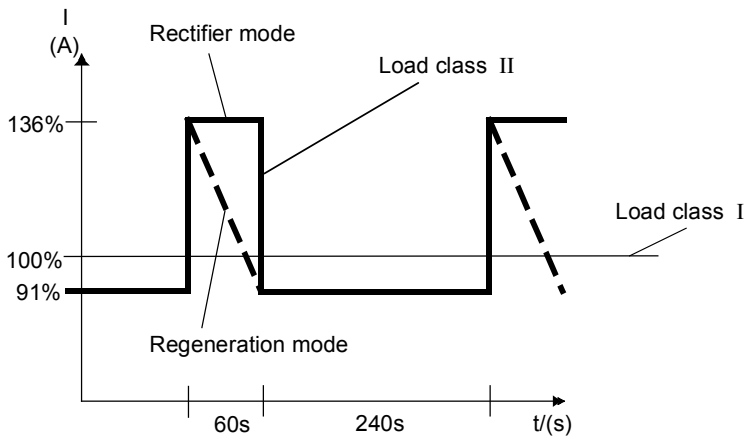

OCP type		G645/1023-EFJ	G925/1023-EF	G645/1780-EFJ	G925/1880-EFJ
Rated voltage, rated current					
Rated voltage (DC link)	V	510V to 650V +10%	675V to 930V +15%	510V to 650V +10%	675V to 930V +15%
Rated current Rectifier operation Regenerating	A	 1023 945	 1023 945	 1780 1640	 1880 1730
Load class II to EN 60146-1-1 of the DC link current (average value)					
Rated current Rectifier operation Regenerating	A	 930 860	 930 860	 1620 1500	 1711 1580
Base load duration	s	240			
Excess current Rectifier operation Regenerating	A	 1390 1280	 1390 1280	 2430 2030	 2566 2350
Excess current duration	s	60			
Losses, cooling					
Max. power dissipation Rectifier operation Regenerating	kW	 1,1 2.3	 1,1 2.4	 1,6 4.0	 1,7 4.6
Cooling air requirement	m^3/s	0.55			
Sound pressure level, dimensions, weight					
Sound pressure level 50Hz 60Hz	dB(A)	 80 83			
Size Width Height Depth	 mm mm mm	 587 750 470			
Weight app.	kg	75			

9.1 Power reduction at increased coolant temperature

Derating is required with coolant temperatures above 40°C.
Cooling medium temperatures > 50°C are not permissible.

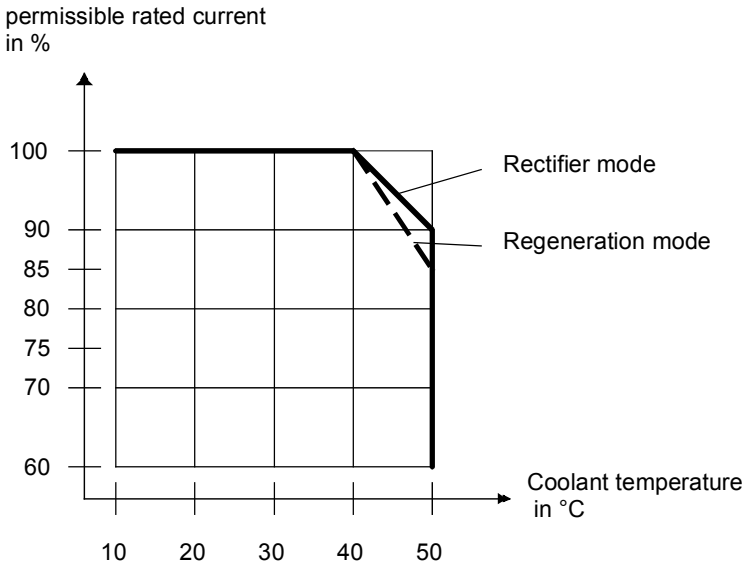

9.2 Power reduction at altitudes > 1000m above MSL

Derating is required with installation altitudes of > 1000 m above MSL.
Installation altitudes > 2000 m above MSL (please enquire)

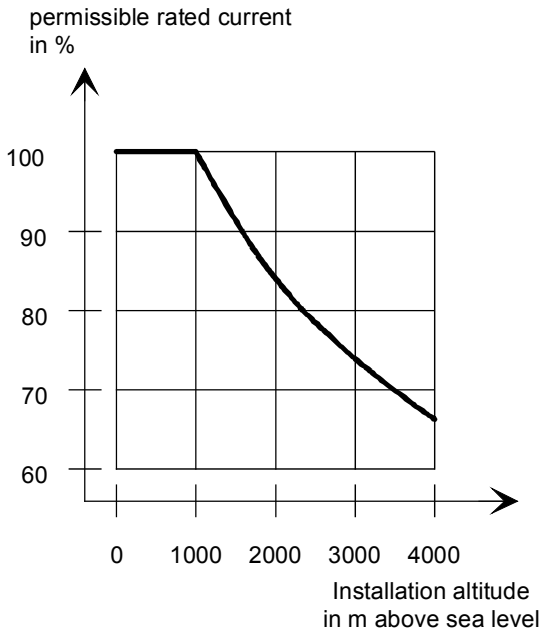

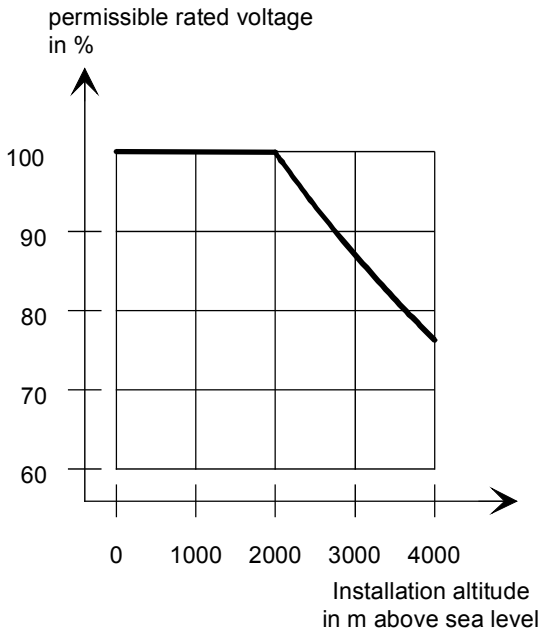

9.3 Applied standards

DIN VDE 0100		Erection of power installations with rated voltages up to 1000 V,
	Part 540 A11.91	Selection and erection of electrical equipment, earthing, PE conductor, equipotential bonding conductor
DIN VDE 0106		Protection against electric shock:
	Part 1 A05.82	Classification of electrical and electronic equipment (IEC 536)
	Part 100 A03.83	Arrangement of actuation elements in the proximity of shock-hazard parts
DIN VDE 0110	Part 1 and 2 A01.89	Isolation coordination for electrical equipment in low-voltage installations
DIN VDE 0113		Safety of machines: electrical equipment of machines,
	Part 1 A06.93	General requirements (EN 60204-1:1992)
DIN VDE 0160	E04.91	Equipping power installations with electronic equipment
DIN VDE 0298		Use of cables and insulated cables for power installations:
	Part 2 A11.79	Recommended values for the current carrying capacity of cables with rated voltages U_0 / U to 18/30 kV
	Part 4 A02.80	Recommended values for the current carrying capacity of cables
DIN VDE 0470	Part 1 A12.92	Types of protection, shock, foreign body and water protection for electrical equipment (EN 60529: 1991)
DIN VDE 0558	Part1 A07.87	Semiconductor converters: general regulations and special regulations for line-commutated converters
DIN VDE 0843		Electromagnetic compatibility of instrumentation and control equipment in industrial process engineering:
	Part 2 A09.87 Z	Interference resistance to static electricity discharges; requirements and measurement methods (IEC801-2) Substituted by DIN EN 60801, Part 2 (09.87)
DIN VDE 0875		RFI suppression of electrical equipment and installations:
	Part 11 A12.88 Z	(EN 55014: 1987) Substituted by DIN VDE 0875, Part 14 and DIN VDE 0075
	Part 1 A07.92	(EN 55011: 1991)
DIN 41494	Part 5 A9.80	Equipment practice for electronic facilities; subracks and modules
DIN 41651	Part 1 A9.89	Connectors for printed circuits for connecting ribbon cables with round conductors; indirect insertion, grid dimension 2.54 mm
DIN IEC 60068	Part 2	Elektrotechnik; Grundlegende Umweltprüfverfahren; Prüfungen
DIN IEC 60721		Electrical engineering; classification of environmental conditions:
	Part 3 A08.87	classes of influencing quantities
IEC 60801		Electromagnetic compatibility for industrial - process measurement and control equipment
	Part 4	Electrical fast transient / burst requirements
EN 60146-1-1:	1993	Semiconductor converters; General requirements and line-commutated converters:
	Part 1-1	Definition of basic requirements (IEC146-1-1991)

Sources:

DIN standards and foreign standards:	Beuth-Verlag GmbH Burggrafenstraße 6 10787 Berlin
DIN VDE regulations:	VDE-Auslieferungsstelle Merianstraße 29 63069 Offenbach

Bisher sind folgende Ausgaben erschienen:
The following versions have appeared so far:
Editions antérieures:
Hasta ahora han aparecido las siguientes versiones:
Finora sono state pubblicate le seguenti edizioni:

Ausgabe **Version** **Edition** **Versión** **Edizione**	**Interne Sachnummer** **Internal part number** **Référence interne** **Nº de referencia interna** **Numero interno**
01	C98130-A7039-A1-01-6419
02	C98130-A7039-A1-02-6419
03	C98130-A7039-A1-03-6419

Ausgabe **03** besteht aus folgenden Kapiteln
Version **03** consists of the following chapters
L'édition **03** comprend les chapitres suivants
La versión **03** consta de los capítulos siguientes
L'edizione **03** comprende i seguenti capitoli

Kapitel **Chapter** **Chapitre** **Capítulo** **Capitolo**		**Seiten** **Pages** **Page** **Páginas** **Pagine**	**Ausgabedatum** **Date of edition** **Date d'édition** **Fecha edición** **Data edizione**
0	Allgemeines, General, Géneralités, Generalidades, Generalità	8	05.01
1	Beschreibung, Description, Description, Descripción, Descrizione	2	02.03
2	Transportieren, Auspacken, Montieren; Transport, Unpacking and Assembly; Transport, déballage, montage; Transporte, desembalaje, montaje; Trasporto, sballaggio, montaggio	4	05.01
3	Anschließen, Connection, Raccordement, Conexión, Allacciamento	14	02.03
4	Inbetriebsetzen, Start-Up, Mise en service, Puesta en servicio, Messa in servizio	2	05.01
5	Störungen und Warnungen, Fault and Alarm Messages, Défauts et alarmes, Fallos y alarmas, Guasti ed allarmi	2	05.01
6	Wartung, Maintenance, Maintenance, Mantenimiento, Assistenza	8	10.01
7	Ersatzteile, Spare-parts, Pièces de rechange, Repuestos, Parti di ricambio	2	02.03
8	Umweltverträglichkeit, Environmental Compatibility, Compatibilité environnementale, Compatibilidad medioambiental, Compatibilità ambientale	2	02.03
9	Technische Daten, Technical Data, Caractéristiques techniques, Datos técnicos, Dati tecnici	6	05.01

Siemens AG
Elektronikwerk Wien
Postfach 83, A-1211 Wien

Siemens Aktiengesellschaft

© Siemens AG, 2001
Änderungen vorbehalten
Subject to change without notice
Sous réserve de modifications
Sujeto a cambios sin previo aviso
Con riserva di apportare modifiche

Bestell-Nr./Order No./N° de réf./Nº de ref./
Nr. di ordinazione: 6SE7000-0AD64

Printed in Austria

Excellence in Automation & Drives: Siemens